CSI 6300 SIS Overview

The CSI 6300 SIS Digital Overspeed Protection System is TÜV - certified according to IEC 61508:2010 and provides speed measurement and detection of rotational direction for rotating machines such as turbines, compressors and pumps. The CSI 6300 SIS protects equipment against overspeed conditions and detects incorrect rotation at startup.

The CSI 6300 SIS consists of three protection monitors (A6370) and one backplane (A6371) mounted into a 19” rack. The system is designed for use with eddy current measuring chains (e.g. PR 6423/xxx-xxx plus CON 011/SF).

The three channel design, starting with the signal detection via signal processing up to the evaluation of the measured speed offers maximum safety and availability for the monitored machines. You can be assured of both operational safety and protection of equipment. The CSI 6300 SIS will bring the machine into a safe state if it has reached a critical condition.

The safety outputs of the CSI 6300 SIS are the trip relays located on the backplane. With the backplane types “Trip Voted” and “Trip Not Voted” two different trip logic concepts are available to provide connectivity to most common trip solutions.

The system also includes an extended fault detection functionality. The three sensors are continuously monitored whether they are operating within the permitted limits. Moreover, the channels mutually check and supervise the output signals of each other.

- Overspeed protection safety function meets SIL 3 requirements
- Rotational direction detection safety function meets SIL 2 requirements
- SIL certification according to IEC 61508:2010 and relevant parts of EN 62511 and DIN EN 62061
- Micro-controller based 3-channel protection system
- Password protection for configuration software and each monitor
- 6 programmable binary outputs per channel
- 2 galvanically separated current outputs per channel
- 3 pulse outputs per channel
- Measurement of shaft acceleration
- Redundant power supply
- Mutual comparison of pulse and analog output signals between all channels
- Self-test functions for electronic circuits and connected sensors
- Integrated Proof-Test function
- Simplified fault detection by display messages in plain text
- RS 232 configuration interface and RS 485 interface for data exchange
- Hot swap of channels during operation
- PROFIBUS DP interface (optional)

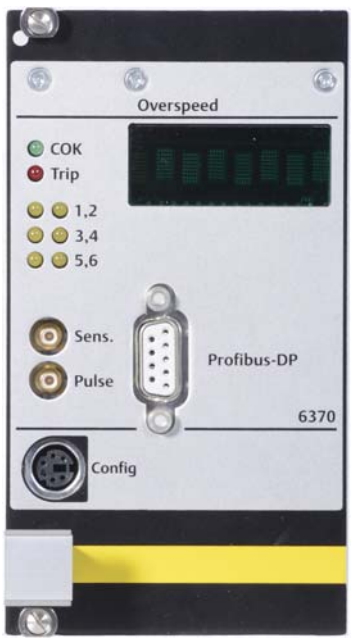

A6370D/DP

TÜV NORD
TÜV NORD Systems GmbH & Co.KG
Safety Approved
CSI 6300 SIS
IEC 61508:2010; SIL 3
DIN EN 62061:2005; SIL_{CL} 3
DIN EN 61511-1:2005; SIL 3
SLA-0077/10

EMERSON
Process Management

Technical Data

System Supply Voltage	
Nominal	24 V
Range	+19 V - +31.2 V
Max. Power consumption	30 W
Further Information	Two redundant decoupled inputs with common ground
Sensor Voltage Supply	
Voltage	-24.5 V ±1.5 V
Max. Current	35 mA
Further Information	Short-circuit proof, galvanically separated
Sensor Signal Input	
Input Voltage Range	0 - 26 V (+/-)
Limit Range	±48 V
Input Resistance	typical 100 kΩ
Input Frequency Range	0 - 20 kHz
Sensor Type	Eddy current measuring chain (e.g. PR 6423 with converter CON 011 / SF), one measuring chain per channel
Further Information	Protection against reverse polarity
Binary Inputs	
Inputs	4 (Test Value 1, Test Value 2, Enable Test Values, Reset Latch)
Signal Level “Low”	0 - 5 V
Signal Level “High”	13 V - 31 V
Input Resistance	typical 6.8 kΩ
Further Information	Galvanically separated with common ground of all binary inputs
Binary Outputs	
Outputs	7 (Out 1 to Out 6, Channel Ok (COK))
Signal Level “Low”	<100 mV
Signal Level “High”	System Supply Voltage -2 V
Max. Current	25 mA
Miscellaneous	Short-circuit proof
Pulse Outputs	
Type	Open-Collector-Emitter, Current limited
Max. Voltage	31.2 V
Max. Current	16 mA at 24V
Frequency Range	0 - 20 kHz
Further Information	Galvanically separated

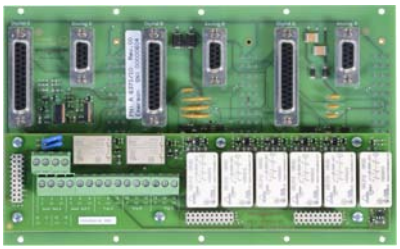

Rear View Backplane A6371/10

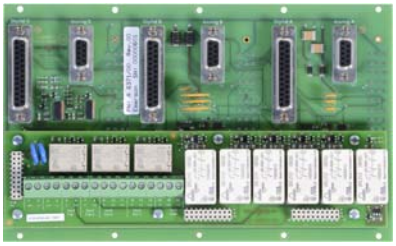

Rear View Backplane A6371/00

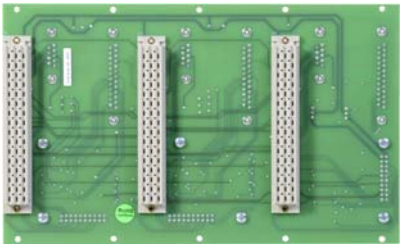

Front View Backplane A6371/xx

CSI 6300 SIS
Digital Overspeed Protection System

Current Outputs	
Max. Output Current	20 mA
Max. Burden	500 Ω
Accuracy	≤1% of f. s.
Configurable Ranges	0 - 20 mA, 4 - 20 mA, 20 - 0 mA or 20 - 4 mA
Further Information	Two outputs per channel, galvanically separated
TTL Output	
Voltage	0 - 5 V (TTL -Signal)
Frequency Range	0 - 20 kHz
Output Impedance	Typical 10 kΩ
Further Information	Short-circuit proof, Mini-SMB Socked located on front plate
Sens. Output	
Voltage Range	0 - 3.9 V (factor 0.15 ±3%)
Output Impedance	Typical 10 kΩ
Further Information	Short-circuit proof, Mini-SMB Socked located on front plate
Relay Outputs	
Switching Capacity	Relays (Out 2, Out 3 and Channel Ok) 48 V AC, 4 A 30 V DC, 4 A Trip Relays: AC1: 48 V / 4 A; AC15: 48 V / 3 A DC1: 24 V / 4 A; DC13: 24 V / 4 A / 0,1 Hz
Backplane A6371/00 Trip Voted	2 Trip Relays in 2oo3 logic 1 Relay Out 2 in 2oo3 logic 1 Relay Out 3 in 2oo3 logic 1 Relay Channel OK in 1oo3 logic
Backplane A6371/10 Trip Not Voted	3 Trip Relays (one per channel Trip A, B, C) 1 Relay Out 2 in 2oo3 logic 1 Relay Out 3 in 2oo3 logic
Communication	
RS 232	Configuration interface, located on front plate, Baud Rate: 38400 Baud
RS 485	Max. 32 devices Baud Rate: 38400, 57600,115200 Baud
Profibus DPV0	Max. 31 devices, only at A6370 D/DP Data transmission rate: up to 12 Mbit/s
Tolerances	
Measuring accuracy of speed	±0.03% of f. s.
Reaction Time	
Speed Measurement	< Measuring Time + 8 ms
Detection of rotational direction	< 3 * Period time of input signal + 8 ms
Typical reaction time speed at 3000 min^{-1}	Mode “1x per revolution”: 35 ms Mode “Automatically”: 12.5ms

CSI 6300 SIS

Configuration Software

Environmental Conditions	
Temperature Nominal Range	-10 - +55°C
Temperature Limit Range	-20 - +65°C
Temperature Storage / Transport	-40 - +70°C
Humidity	5 - 95% non-condensing
Vibration / Shock	Vibration: 0.15 mm (58 - 62 Hz) 20 m/s² (to 150 Hz) Shock: 100 m/s², 6 ms
Degree of Protection	IP 20 if mounted according manual
EMC	According to IEC 61326-1, IEC 61326-3-1 Electromagnetic Radiation according to DIN EN 550011 Class A
Operating Altitude	5000 m
Allowed degree of pollution	Category 1 (According to IEC 61010)
Weight	
Backplane A6371/00 and A6371/10	490 g / 1.08 lb (without rack)
Monitor A6370 D	250 g / 0.55 lb
Monitor A6370 D/DP	275 g / 0.61 lb
Dimensions	
Monitor A6370 D and A6370 D/DP	Width 14 HP (approx. 71 mm / 2.8 in) High 3 RU (approx. 128 mm / 5.04 in) Printed circuit board 100 mm x 160 mm 3.94 in x 6.3 in Connector type F48
Backplane A6371/00	W 211 mm x H 130 mm x D 43mm W 8.31 in x H 5.12 in x D 1.70 in
Backplane A6371/10	W 211 mm x H 130 mm x D 58mm W 8.31 in x H 5.12 in x D 2.28 in
D-Sub Interface A6380	W 34.7 mm x H 65.5 mm x D 45.1 mm W 1.37 in x H 2.58 in x D 1.78 in
D-Sub Interface A6381	W 57.4 mm x H 69 mm x D 62 mm W 2.26 in x H 2.72 in x D 2.44 in
19” Rack A6352	W 482.6 mm x H 132.5 mm x D 215 mm W 19 in x H 5.22 in x D 8.64 in
Clamps Sub-D Interface A6380, A6381 and Backplane A6371/00, A6371/10	
Conductor cross-section	rigid: max. 4 mm² flexible: min. 0.2 mm² flexible: max. 2.5 mm² AWG: min. 24 AWG: max. 12
Dismantle length	8 mm

A6370D

System Principle

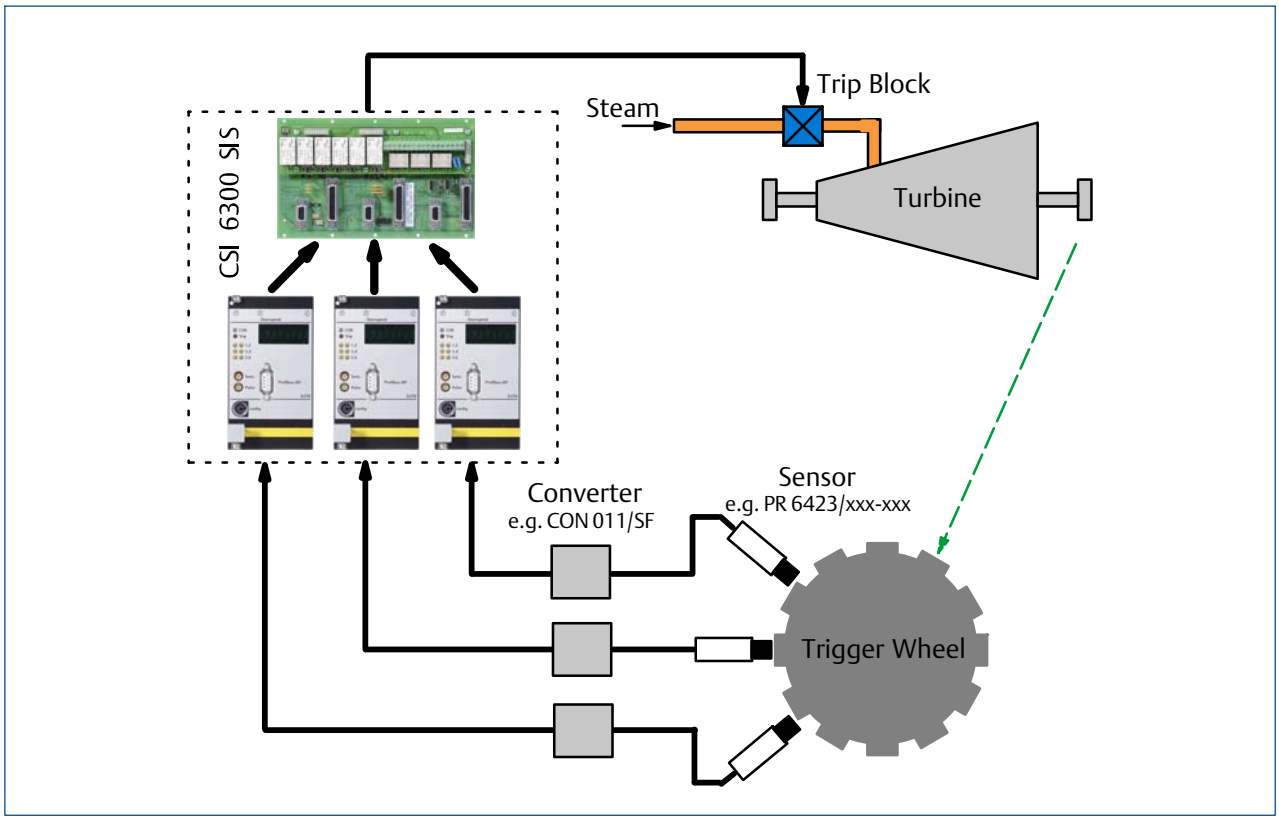

Example System Configuration for CSI 6300 SIS - Trip Voted

Component	Quantity
A6370 D (Monitor)	3
A6371/00 (Backplane)	1
A6351 (19“ Rack)	1
A6380 (9 Pole Connection Block)	3
A6381 (25 Pole Connection Block)	3
A6384 (9 Pole Cable 1m)	3
A6385 (25 Pole Cable 1m)	3
PR 6423/xxx-xxx	3
CON 011/SF	3
ConfigKit Protection	1

Eddy Current Measuring Chain for SIL-Certified Installation

Eddy current measuring chains consisting of the sensors and converter shown in the table below meets SIL 2 requirements according to IEC 61508:2010 with systematic qualification for SIL 3.

All mechanical variations (sleeve thread, sleeve length, sensor cable length, ...) of the listed sensors are certified.

The associated converter are available with standard or with extended measuring ranges. Extended measuring ranges are 1.5 or 2 times of the standard ranges.

Certified Eddy Current Measuring Chain		
Sensors	**Converter**	
PR 6422/xxx-xxx (serial number ≥600)	CON 011/SF	(serial number ≥28000)
PR 6423/xxx-xxx (serial number ≥600)	CON 011/9../SF	(serial number ≥28000)
PR 6424/xxx-xxx (serial number ≥600)	CON 041/SF	(serial number ≥28000)
	CON 041/9../SF	(serial number ≥28000)

Diagram of Available SIL-Certified Eddy Current Measuring Chains

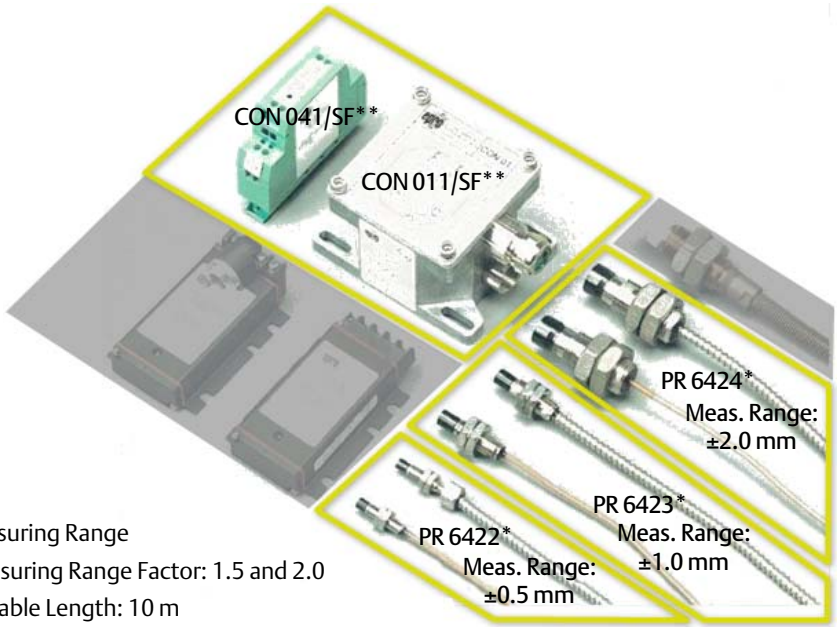

Standard Measuring Range
Extended Measuring Range Factor: 1.5 and 2.0
Max. Sensor Cable Length: 10 m

* S/N ≥600
** S/N ≥28000

Ordering Information

Part Number	Product Description
A6370/D	CSI 6300 SIS - Monitor, 1 CH Speed, Display
A6370/D/DP	CSI 6300 SIS - Monitor, 1 CH Speed, Display, PROFIBUS DP
A6371/00	CSI 6300 SIS - Backplane, Trip Voted
A6371/10	CSI 6300 SIS - Backplane, Trip Not Voted
A6380	CSI 6300 SIS - Connection Block, DIN Rail, Sub-D Connection, 9 Pole
A6381	CSI 6300 SIS - Connection Block, DIN Rail, Sub-D Connection, 25 Pole
A6384	CSI 6300 SIS - Connection Cable, Sub-D Connection, 9 Pole, 1 Meter
A6385	CSI 6300 SIS - Connection Cable, Sub-D Connection, 25 Pole, 1 Meter
A6386	CSI 6300 SIS - Connection Cable, Sub-D Connection, 9 Pole, 3 Meter
A6387	CSI 6300 SIS - Connection Cable, Sub-D Connection, 25 Pole, 3 Meter
A6352	CSI 6300 SIS - Rack, 19 Inch, 3U
A6363	CSI 6300 SIS - Connection Cable, PROFIBUS, Connector/Connector, 4 Meter
9199-00027	ConfigKit Protection includes configuration cable, test cables, software and quick start guide

System Bundles

Bundle	Description	Content	NC
A 6300/P1	CSI 6300 SIS - Trip Voted	19“ System Framework Backplane A 6371/00 (Trip Voted) 3x Monitor A 6370 D (Display) per 3x Connection Block 9 and 25 pole per 6x Connection Cable 1m and 3m Configuration-Kit for CSI 6300 SIS System	9199-00105
A 6300/P2	CSI 6300 SIS - Trip Not Voted	19“ System Framework Backplane A 6371/10 (Trip Not Voted) 3x Monitor A 6370 D (Display) per 3x Connection Block 9 and 25 pole per 6x Connection Cable 1m and 3m Configuration-Kit for CSI 6300 SIS System	9199-00106
A 6300/P3	CSI 6300 SIS - Trip Voted & PROFIBUS	19“ System Framework Backplane A 6371/00 (Trip Voted) 3x Monitor A 6370 D/DP (Display + PROFIBUS) per 3x Connection Block 9 and 25 pole per 6x Connection Cable 1m and 3m Configuration-Kit for CSI 6300 SIS System	9199-00107
A 6300/P4	CSI 6300 SIS - Trip Not Voted & PROFIBUS	19“ System Framework Backplane A 6371/10 (Trip Not Voted) 3x Monitor A 6370 D/DP (Display + PROFIBUS) per 3x Connection Block 9 and 25 pole per 6x Connection Cable 1m and 3m Configuration-Kit for CSI 6300 SIS System	9199-00108

Emerson Process Management
Asset Optimization
Jöbkesweg 3
48599 Gronau
T +49 2562 709 0
F +49 2562 709 401

©2012, Emerson Process Management.

The contents of this publication are presented for informational purposes only, and while every effort has been made to ensure their accuracy, they are not to be construed as warranties or guarantees, express or implied, regarding the products or services described herein or their use or applicability.

All sales are governed by our terms and conditions, which are available on request. We reserve the right to modify or improve the designs or specifications of our products at any time without notice.

All rights reserved. Machinery Health is a mark of one of the Emerson Process Management group of companies. The Emerson logo is a trademark and service mark of Emerson Electric Co. All other marks are the property of their respective owners.