Fisher™ EW Series (EWD/EWS/EWT) Sliding-Stem Control Valves through NPS 12x8

Fisher EW Series easy-e™ valves (figures 1, 2, 3, and 4) feature large internal cavities with expanded end connections and a variety of unbalanced and balanced plug designs. Sizes available from NPS 4x2[(1)] through 12x8. These combinations provide good fluid control in economical, high-capacity valve bodies that keep valve outlet velocities within practical limits.

These valves meet a variety of service requirements, such as power plants where oversized piping is used to limit fluid flow velocity. They also perform well in noise abatement applications; for example, high-pressure gas reducing stations where sonic velocities are often encountered at the outlet of conventional valve bodies.

The Fisher EW product line is available for a wide range of applications, including sulfide and chloride stress-cracking environments common to the oil and gas production industries. To discuss available constructions, contact your Emerson Automation Solutions sales office and include the applicable codes and standards required for these environments.

W2777-3

The easy-e Valve Family

EW Series valves are part of the versatile easy-e family of Fisher industrial control valves. easy-e valves share the following characteristics:

- Multiple trim material choices
- Trim temperature capability with metal seats standard to 427°C (800°F)
- Interchangeable, restricted-capacity trims and full-size trims to match variable process flow demands
- Different cage/plug styles that provide particular flow characteristics for highly-specialized applications. The standard cage comes in three different flow characteristics:
    - quick-opening
    - linear
    - equal percentage
- Cavitrol™ III cages are available to eliminate cavitation damage and Whisper Trim™ III cages are available to help attenuate aerodynamic noise.
- 316 stainless steel packing box parts are standard (including packing flange, studs, and nuts)

The temperature limits of EWT valves can be extended above 232°C (450°F) by using PEEK

(PolyEtherEtherKetone) anti-extrusion rings in combination with a spring-loaded PTFE seal. The PEEK anti-extrusion rings expand to close off the clearance gap between the plug and the cage where the PTFE seal may extrude at high temperatures and pressures. The temperature limits are extended to 316°C (600°F) for non-oxidizing service and to 260°C (500°F) for oxidizing service.

Note

Refer to Fisher Bulletin 51.1:EWN, EWN Series valves with Whisper Trim III cages (D100024X012) for further information.

Note

Refer to Fisher Bulletin 80.3:010, WhisperFlo™ Aerodynamic Noise Attenuation Trim (D102362X012) for further information.

Features

- **Compliance with the Clean Air Act**— ENVIRO-SEAL™ packing systems provide an improved stem seal to help prevent the loss of valuable or hazardous process fluid. The ENVIRO-SEAL packing systems feature PTFE or Graphite ULF packing with live-loading for reduced packing maintenance.

- **Noise Attenuation**—In an EW Series valve, noise produced by high flow rates and large pressure drops can be reduced by up to 18 dbA with a Whisper Trim I cage, by up to 30 dbA with a Whisper Trim III cage, and by up to 40 dbA with a WhisperFlo cage.

- **Piping Economy**—Expanded end connections of EW Series valve bodies may reduce the need for line swages while accommodating oversized piping arrangements used to limit fluid flow velocities.

- **Temperature Compensation**—On designs with the seat ring threaded into the valve body (figure 4), the hung cage feature helps reduce gasketing problems caused by thermal expansion and contraction of long parts, such as the cage assembly.

- **Standard Trim Parts across the easy-e product line**—Included are FGM gaskets, packing flange, studs, and nuts.

- **High-Temperature, Class IV or Class V Shutoff**—Optional multiple piston rings (figure 14) for EWD and EWD-1 valve bodies permit Class IV shutoff up to 593°C (1100°F).
  Use of C-seal trim for EWD (see figure 5) permits Class V shutoff up to 593°C (1100°F).

- **Increased Pressure/Temperature Ratings**—NPS 12x8 CL900 EW Series valve bodies with buttwelding end connections are capable of increased ASME ratings called Intermediate Standard Ratings. The extra strength of the valve body allows these valves to be used where pressures and temperatures exceed Standard Class ratings in ASME B16.34.

  See Bulletin 59.1:027, Increased Pressure/ Temperature Ratings for EH and EW Series Steel Valves (D100076X012) for further information.

- **Sour Service Capability**— Unless otherwise noted, references are to NACE MR0175-2002. Optional materials are available to meet NACE MR0103 and NACE MR0175 / ISO 15156. Material requirements under these standards vary by edition and year of issue; the specific standard must be specified.

Table of Contents

Features 2
Specifications 3
C-seal Trim Description 6
ENVIRO-SEAL and HIGH-SEAL Packing Systems 6
Available Configurations 10
Material Selection Guidelines 10
ANSI/FCI Class VI Shutoff Capabilities 12
Fisher TSO (Tight Shutoff) Trim Capabilities 13
Installation 13
Dimensions 31

Specifications

Valve Body Configurations

See Available Configurations section

Valve Body Sizes

See table 2

End Connection Styles

Flanged: ■ CL150, 300, 600, and 900 raised-face or ring-type joint flanges per ASME B16.5, ■ raised-face per EN 1092-1/B
Buttwelding: Styles per ASME B16.25 schedules that are consistent with ASME B16.34 are Schedule ■ 40 or ■ 80 for all CL300 and 600 valves, Schedule ■ 80 or ■ XXS for NPS 8x6 CL900 valves, or Schedule ■ 80, ■ 100, or ■ 120 for NPS 12x8 CL900 valves

Maximum Inlet Pressures and Temperatures(1)

Consistent with applicable ■ CL300, ■ 600(2), or ■ 900 pressure/temperature ratings per ASME B16.34 unless limited as follows:
Valves With All Except Cavitrol III or Whisper Trim III Cages: Where limited by individual pressure/temperature capabilities in figure 8 or 9 or temperature capabilities in table 11, 12, 13, or 20.
Valves With Cavitrol III Cages: Where limited by individual pressure/temperature capabilities in figure 12 or temperature capabilities in table 16 or 20
Valves With Whisper Trim III Cages: Where limited by individual pressure/temperature capabilities in figure 15 or 16 or temperature capabilities in table 18 or 20

Maximum Pressure Drops(1, 3)

Same as maximum inlet pressure for specific construction defined above, except where further limited as follows:
Valves With All Except Cavitrol III or Whisper Trim III Cages: See figure 8 or 9
Valves With Cavitrol III Cages: See figure 12
Valves With Whisper Trim III Cages: See figure 15 or 16, except where further restricted by the following max $\Delta P/P1$ ratio — ■ 0.60 for level A cages, ■ 0.75 for level B cages, ■ 0.85 for level C cages, or ■ 0.99 for level D cages(4)

Shutoff Classifications Per ANSI/FCI 70-2 and IEC 60534-4

See tables 3 and 4

Construction Materials

Valve, Bonnet, and Bonnet Spacer If Used: ■ WCC carbon steel, ■ LCC carbon steel, ■ WC9 chrome moly steel, ■ CF8M (316 SST), ■ other materials upon request
Valve Plug, Cage, and Metal Seating Parts
Valves With All **Except** *Cavitrol III or Whisper Trim III Cages:* See table 5 or 14
Valves With Cavitrol III Cages: See table 15
Valves With Whisper Trim III Cages: See table 17, 18, or 19
All Other Parts: See table 20

Material Temperature Capabilities(1)

Valve Body/Trim Combinations
Valves With All **Except** *Cavitrol III or Whisper Trim III Cages:* See figure 8 or 9 and table 11, 12, or 13
Valves With Cavitrol III Cages: See figure 12 and table 16
Valves With Whisper Trim III Cages: See figure 15 or 16 and table 18
All Other Parts: See table 20

Flow Characteristics

Standard Cages: ■ Quick-opening, ■ linear, or ■ equal percentage
Cavitrol and Whisper Trim Cages: Linear

Flow Directions

Valves with Standard Cages
EWD, EWD-1, EWT, and EWT-1: Normally down(5)
EWS and EWS-1: Normally up(6)
Valves with Cavitrol Cages: Always down(5)
Valves with Whisper Trim III Cages: Always up(6)

Flow Coefficients and Noise Level Prediction

Refer to Fisher Catalog 12

Port Diameters and Maximum Valve Plug Travels

See table 21

- continued -

Specifications (continued)

Yoke Boss and Stem Diameters

See table 21

Typical Bonnet Styles (see table 23)

■ Plain, ■ style 1 cast extension, ■ style 2 cast extension, ■ ENVIRO-SEAL bellows seal bonnet

Packing Arrangements

■ Standard PTFE, ■ Double PTFE, ■ Graphite, ■ ENVIRO-SEAL PTFE, ■ ENVIRO-SEAL Duplex, ■ ENVIRO-SEAL Graphite ULF, ■ HIGH-SEAL

Approximate Weights

See table 22

Optional Safety Instrumented System Classification

EWD, EWD-1, EWT, and EWT-1: SIL3 capable — certified by exida Consulting LLC

Options

■ Lubricator, ■ lubricator/isolating valve, ■ drilled and tapped connection in extension bonnet for leak-off service, ■ valve body drain plug, ■ ENVIRO-SEAL bellows seal bonnet for positive stem sealing of hard-to-handle fluids at temperatures up to 566°C (1000°F), ■ style 3 fabricated extension bonnet made on order to a specific length for cryogenic service, ■ special seismic service bonnet, ■ packings suitable for nuclear service, and ■ forged bonnet for 5 in. (127 mm) yoke boss on NPS 8x6 CL900 valve, ■ Class V shutoff for EWT above 232°C (450°F) using PEEK anti-extrusion rings ■ Class V shutoff for EWD up to 593°C (1100°F) using C-seal trim

1. The pressure/temperature limits in this bulletin and any applicable standard or code limitation should not be exceeded.
2. Certain bonnet bolting material selections may require a CL600 easy-e valve assembly to be derated. Contact your Emerson Automation Solutions sales office for more information.
3. Only NPS 12x8 CL900 valve bodies with threaded (-1) seat rings can take full CL900 pressure drops; CL900 valve bodies with clamped (no dash number) seat rings are limited to CL600 pressure drops. Also, there are two different NPS 8x6 CL900 valve bodies, one for use only with Cavitrol III cages and the other for use with all other constructions. An NPS 8x6 CL900 valve body with Cavitrol III cage can take full CL900 pressure drops. For information on other NPS 8x6 constructions that can take full CL900 pressure drops, contact your Emerson Automation Solutions sales office. All other NPS 8x6 constructions are limited to CL600 pressure drops (1440 psid flowing drop) even though installed in a CL900 valve body.
4. Restriction based on excessive noise if max $\Delta P/P1$ ratio for a given cage level is exceeded.
5. Down:in through cage and out through seat ring (direction shown in figure 1).
6. Up:in through seat ring and out through cage as shown in figure 13.

ENVIRO-SEAL Packing System Specifications

Applicable Stem Diameters

■ 19.1 (3/4), ■ 25.4 (1), and ■ 31.8 (1-1/4) diameter valve stems

Maximum Pressure/Temperature Limits(1)

To Meet the EPA Fugitive Emission Standard of 100 PPM(2)
For ENVIRO-SEAL PTFE and ENVIRO-SEAL Duplex packing systems: full CL300 up to 232°C (450°F)
For ENVIRO-SEAL Graphite ULF packing system: 1500 psig (104 bar) at 316°C (600°F)

Construction Materials

PTFE Packing Systems:
Packing Ring and Lower Wiper: PTFE V-ring(3)
Male and Female Adaptor Rings: Carbon-filled PTFE V-ring
Graphite ULF Packing Systems: Graphite rings
Anti-Extrusion Washer: Filled PTFE (not required for graphite packing)
Lantern Ring: S31600 (316 stainless steel) (not required for graphite packing)
Packing Box Flange: S31600
Spring: ■ 17-7PH stainless steel, ■ N06600, or ■ S17700
Packing Follower: S31600 lined with carbon-filled PTFE
Packing Box Studs: Strain-hardened 316 stainless steel
Packing Box Nuts: 316 stainless steel SA194 Grade 8M

1. Refer to the valve specifications in this bulletin for pressure/temperature limits of valve parts. Do not exceed the pressure/temperature rating of the valve. Do not exceed any applicable code or standard limitation.
2. The Environmental Protection Agency (EPA) has set a limit of 100 parts per million (ppm) for fugitive emissions from a valve in selected VOC (Volatile Organic Compound) services.
3. In vacuum service, it is not necessary to reverse the ENVIRO-SEAL PTFE packing rings.

Figure 1. Fisher EWD Valve with Standard Cage

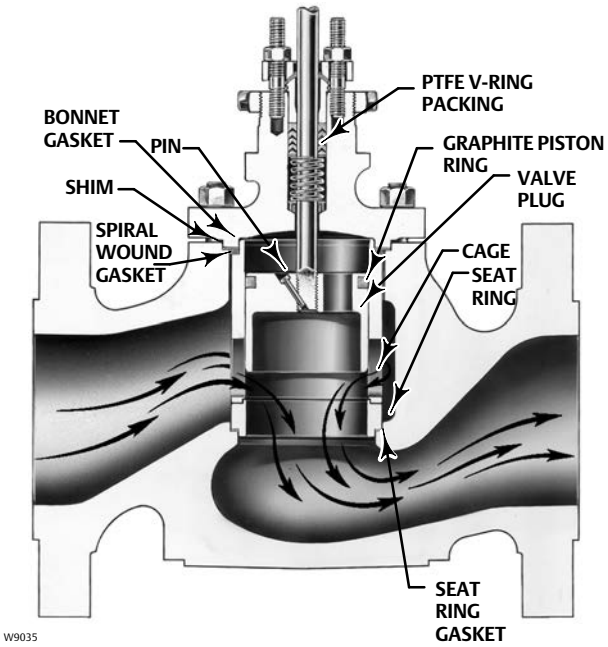

TYPICAL OF CONSTRUCTIONS THROUGH NPS 12x6

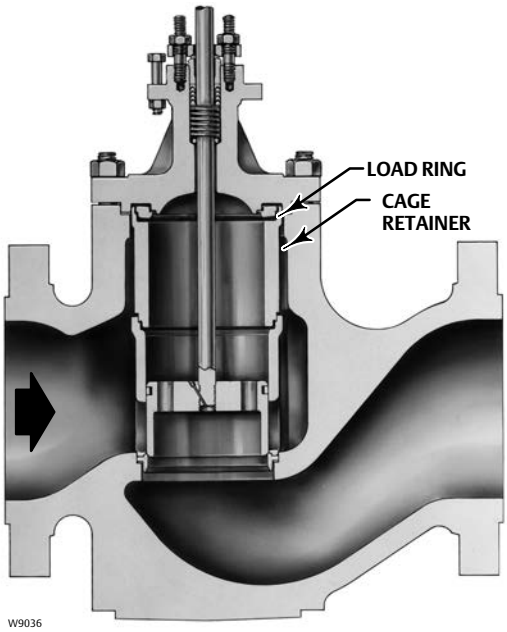

NPS 12x8 CONSTRUCTION

NOTE:
The NPS 10x8 valve is similar in appearance to sizes through NPS 12x6. However, the NPS 10x8 uses the load ring shown for the NPS 12x8. It does not use the cage retainer.

Figure 2. Fisher EWT Trim Details

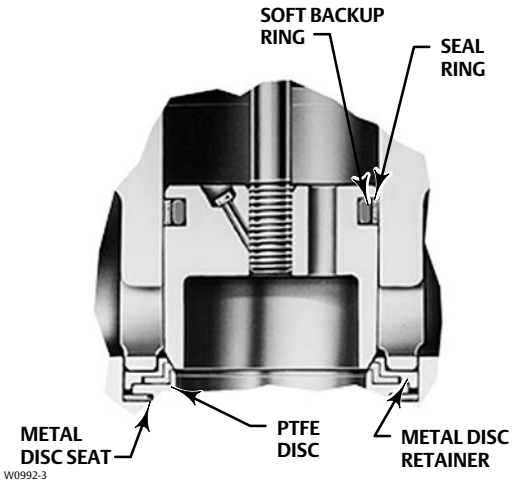

STANDARD CONSTRUCTION (SEAT PARTS ALSO TYPICAL OF OPTIONAL EWS PTFE SEATING)

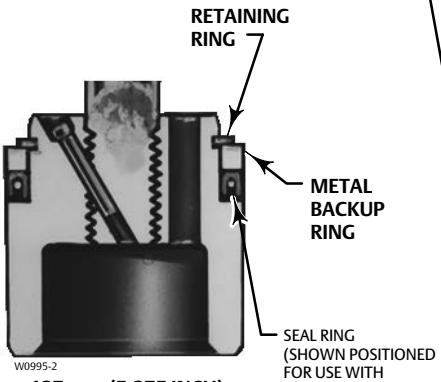

137 mm (5.375 INCH) AND SMALLER PORTS

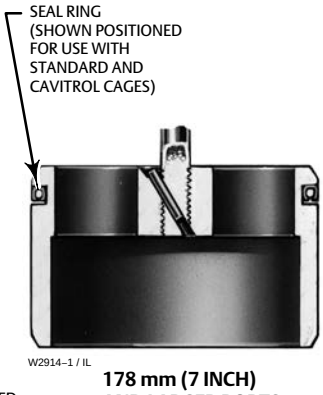

178 mm (7 INCH) AND LARGER PORTS

VALVE PLUG WITH OPTIONAL PRESSURE-ASSISTED SEAL RING

Figure 3. Fisher EWS Trim Details Showing Standard Cage and Seating Construction

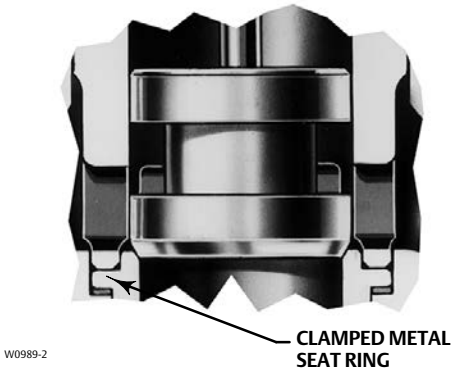

C-seal Trim Description

C-seal trim (figure 5) is available for valves with port diameters from 2.875 inches through 8 inches.

With C-seal trim, a balanced valve can achieve high-temperature, Class V shutoff. Because the C-seal plug seal is formed from metal (N07718 nickel alloy) rather than an elastomer, a valve equipped with the C-seal trim can be applied in processes with a fluid temperature of up to 593°C (1100°F).

ENVIRO-SEAL and HIGH-SEAL Packing Systems

Fisher ENVIRO-SEAL and HIGH-SEAL packing systems (figure 17) offer excellent sealing capabilities. These systems easily install in your existing valves or can be purchased with new valves. These systems help you seal your process to conserve valuable process fluid and to protect the environment against the emission of hazardous or polluting fluids. The long-life and reliability of these systems also reduce your maintenance cost and downtime.

For applications requiring compliance with environmental protection regulations, the unique ENVIRO-SEAL packing system and, for hazardous service, the ENVIRO-SEAL bellows seal bonnet (figure 18) are offered. The emission control packing system or seal bonnet keeps emission concentrations below the EPA 100 ppm requirement.

For an excellent stem seal in applications that are not environmentally-sensitive, the HIGH-SEAL Graphite ULF packing system is offered. The HIGH-SEAL packing system provides excellent sealing at pressure/temperature ratings beyond ENVIRO-SEAL limits.

ENVIRO-SEAL packing systems, available with PTFE, Graphite ULF, or Duplex packing, and the HIGH-SEAL Graphite ULF packing system feature live-loading and unique packing-ring arrangements for long-term, consistent sealing performance.

Figure 4. Fisher NPS 12x8 CL900 EWT-1 Valve

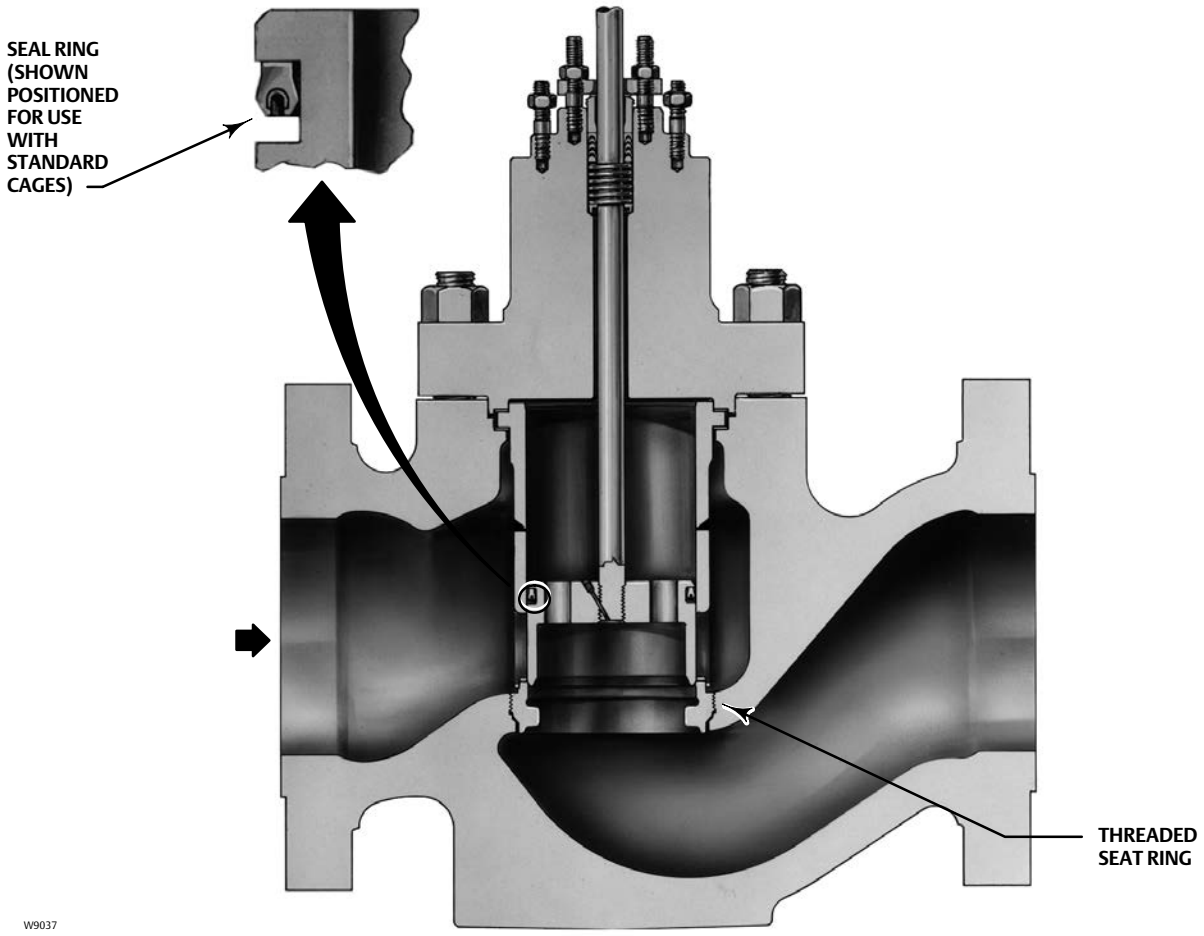

Figure 5. C-seal Trim

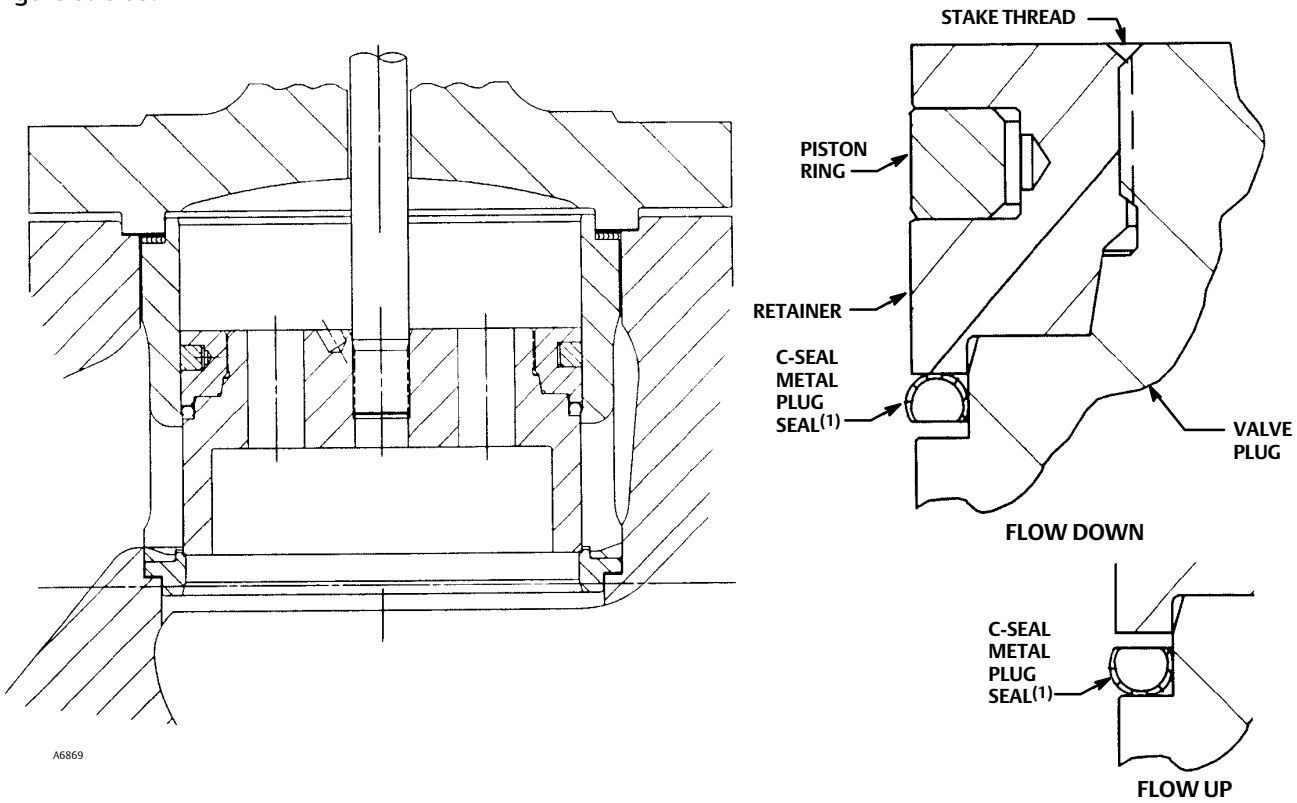

NOTES:
1. Reverse the orientation of the C-Seal plug seal proper shutoff when valve is used in a process with different fluid flow direction.

Figure 6. Typical Balanced TSO Trim

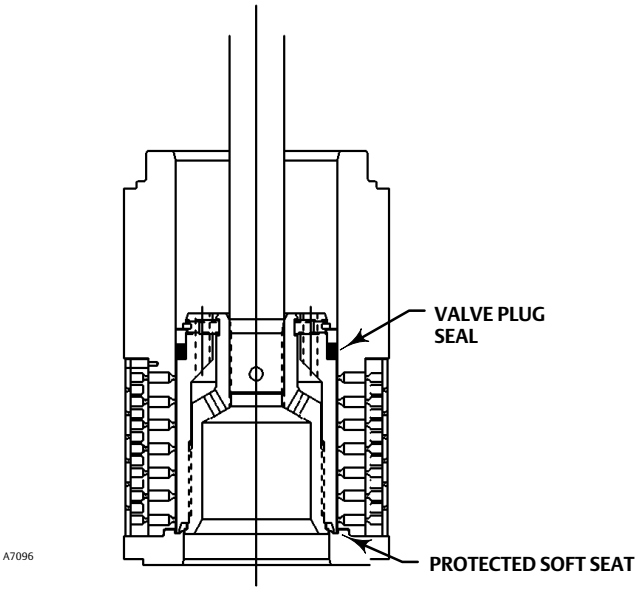

Table 1. Metal Trim Part Materials for Compatibility with NACE MR0175-2002 (Sour Service) Specifications, Environmental Restrictions Apply, Refer to Standard

Trim Designation	Valve Plug	Cage	Seat Ring for Standard Metal Seat Construction	Disk Seat and Retainer for Optional PTFE-Seat Construction	Valve Stem, Packing Follower, Lantern Ring, Packing Box Ring, and Pin	Load Ring(1)
85(3)	S31600	316 SST with electroless nickel coating (ENC)	S31600	- - -	S20910 (Valve Stem) S31600 (All Other Parts)	N05500
85C(2,3)	S31600	316 SST with electroless nickel coating (ENC)	- - -	S31600		
86(3)	S31600 with seat hard faced with CoCr-A hardfacing alloy	316 SST with electroless nickel coating (ENC)	R30006 (alloy 6)	- - -		
87	S31600 with seat and guide hard faced with CoCr-A hardfacing alloy	316 SST with electroless nickel coating (ENC)	R30006 (alloy 6)	- - -		
87C(2)	S31600 with seat and guide hard faced with CoCr-A hardfacing alloy	316 SST with electroless nickel coating (ENC)	- - -	S31600		

1. NPS 10x8 and 12x8 valve body only.
2. 85C and 87C are trims for PTFE-seat constructions in EWS and EWT valves.
3. Not for use with Whisper Trim I with 5-3/8 inch and larger ports.

Figure 7. Typical Trim for NACE MR0175-2002 (Sour Service) (tables 11, 12, and 13 should be used along with these graphs to determine specific limits based on valve size and trim selection)

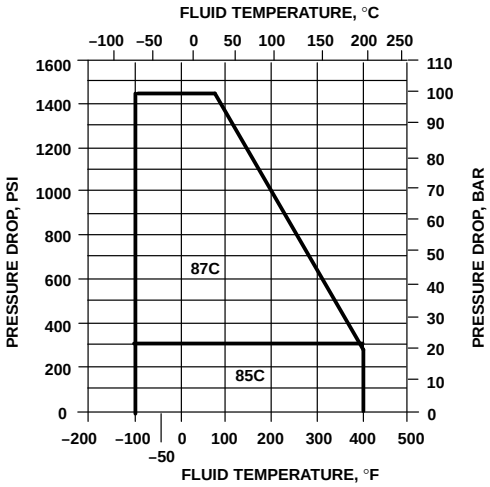

A3115-3

FOR STANDARD PTFE SEATING WITH ALL 2 BODY MATERIALS

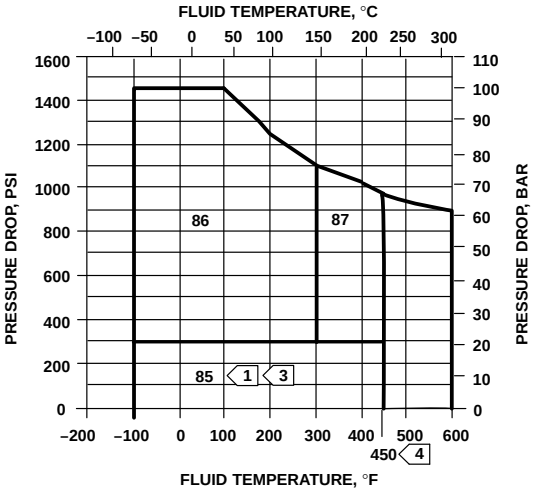

FOR OPTIONAL METAL SEATING WITH 2 CF8M MATERIAL

NOTES:
1 Use trim 87 instead of trim 85 for non-lubricating fluids such as superheated steam or dry gasses between 149°C (300°F) and 316°C (600°F).
2 Do not exceed the maximum pressure and temperature for the class rating of the body material used, even through the trims shown may have higher capabilities.
3 Use trim 85 up to 99 BAR (1440 PSI) with clean dry gas. For process fluids other than clean dry gas, use trim 85 only up to 21 bar (300 PSI).
4 Trim 87 temperature limit can be extended above 232°C (450°F) If PEEK anti-extrusion rings and spring-loaded seal ring are used.

Table 2. Available Valve Constructions[1]

VALVE	VALVE SIZE[2], NPS									
	CL150, 300, or 600								CL900	
	4x2	6x4	8x4	8x6	10x6[3]	12x6	10x8	12x8	8x6	12x8
EWD	x	x	x	x	x	x	x	x	x	x
EWD-1	---	---	---	---	---	---	---	---	---	x
EWS	x	x	x	x	x	x	x	x	x	x
EWS-1	---	---	---	---	---	---	---	---	---	x
EWT	x	x	x	x	x	x	x	x	x	x
EWT-1	---	---	---	---	---	---	---	---	---	x

1. X indicates available construction.
2. Two-number valve size designates end connection size x effective trim size.
3. NPS 10x6 has a valve outlet area identical to the NPS 8x6.

Available Configurations

All configurations covered in this bulletin use a single-port, globe-style valve body with cage guiding and push-down-to-close valve plug action. This valve style is combined with different plug styles and either a clamped seat ring (no dash number suffix) or a seat ring threaded into the valve body (-1 suffix).

EWD: Balanced valve plug (figure 1) with clamped seat ring and metal-to-metal seating for all general applications over a wide range of pressure drops and temperatures.

EWD-1: NPS 12x8 CL900 EWD valve body, with threaded seat ring.

EWS: Unbalanced valve plug (figure 3) with clamped seat ring and metal-to-metal or optional metal-to-PTFE seating for all general applications requiring better shutoff capabilities than can be obtained with the EWD valve body.

EWS-1: NPS 12x8 CL900 EWS valve body, with threaded seat ring and metal-to-metal seating.

EWT: Balanced valve plug (figure 2) with metal-to-PTFE seating (for stringent shutoff requirements) standard in all EWT valves (except those with Cavitrol III cages). Metal-to-metal seating for higher temperatures is standard for all EWT valve bodies with Cavitrol III cages and optional for these valves with other cages.

EWT-1: NPS 12x8 CL900 EWT valve body, with threaded seat ring and with metal-to-metal seating (figure 4).

Material Selection Guidelines

Regardless of valve construction, select the valve body/bonnet material from the specifications table, keeping in mind that the valve service conditions cannot exceed the ASME pressure/temperature limitations for the selected valve body. Then, perform steps 1 and 2 under the appropriate valve design heading to complete the selection process.

EWD, EWS, or EWT Valve with all except Cavitrol III or Whisper Trim III Cages

1. Choose a trim combination for the service conditions according to figure 7 and 8, while making sure from tables 1 and 5 that this combination provides the desired trim materials. Then, make sure from table 11, 12, or 13 that the valve body/trim temperature limits are not exceeded.

2. Finally, check in table 20 that packing and other valve parts are available in materials that meet the desired service conditions.

EWD-1, EWS-1, or EWT-1 Valve with Standard Cage

1. Choose a trim combination for the service conditions according to figure 9, while making sure from table 7 that this combination provides the desired trim materials.

2. Finally, check in table 20 that packing and other valve parts are available in materials that meet the desired service conditions.

Table 3. Shutoff Classifications per ANSI/FCI 70-2 and IEC 60534-4

Valve	Seating	Shutoff Class
EWD or EWD-1	Metal	II (standard)
		III (optional for NPS 6x4 through 12x8 valves)
		IV (optional for NPS 6x4 through 12x8 valves with optional multiple graphite piston rings)
EWS or EWS-1	Metal	IV (standard)
		V (optional, consult your Emerson Automation Solutions sales office)
EWS	PTFE	VI
EWT with all except Cavitrol III cages	PTFE	V (optional)
	Metal	IV
		V[1]
EWT with 1-stage Cavitrol III cage	Metal	IV (standard)
		V (optional)
EWT with 2-stage Cavitrol III cage or 2- or 3-stage Cavitrol III cage	Metal or PTFE	V
EWT-1	Metal	IV

1. Class V shutoff for EWT requires spring-loaded seal ring, radius-seat plug, and wide-bevel seat ring. Not available with 8-inch port, quick-opening cage. Not available with S31600 (316 SST) valve plug and seat ring (trims 4, 29, 85).

Table 4. C-seal Shutoff Classification

Valve	Valve Size, NPS	Port Diameter, mm (Inches)	Cage Style	ANSI/FCI Leakage Class
EWD (CL300, 600)	6x4x2 1/2	73 (2.875)	Eq. %, Linear, Whisper I, Cav III (2-Stage)	Class V to 593°C (1100°F) [for port diameters from 73 through 203.2 mm (2.875 though 8-inch) with optional C-seal trim]
	6x4	111.1 (4.375)	Eq. %, Linear, Whisper I, Cav III (1-Stage), Whisper III	
	8x4			
	6x4	87.3 (3.4375)	Whisper III	
	8x4			
	8x6	136.5 (5.375)	Cav III (2-Stage), Whisper III	
	12x6			
	10x6[1]	136.5 (5.375)	Whisper III	
	8x6	177.8 (7)	Eq. %, Linear, Whisper I, Cav III (1-Stage), Whisper III	
	10x6[1]			
	12x6			
	10x8	203.2 (8)	Eq. %, Linear, Whisper I, Cav III (1-Stage), Whisper III	
	12x8			
	10x8	177.8 (7)	Whisper III	
	12x8			

1. NPS 10x6 has a valve outlet area identical to the NPS 8x6.

EWT Valve with Cavitrol III Cage

1. Choose a trim combination for the service conditions according to figure 12, while making sure from table 15 that this combination provides the desired trim materials. Then, make sure from table 16 that the valve body/trim temperature limits are not exceeded.

2. Finally, check in table 20 that packing and other valve parts are available in materials that meet the desired service conditions.

EWD, EWS, or EWT Valve with Whisper Trim III Cage

1. Choose a trim combination for the service conditions from table 17. Then, make sure from table 18 that the valve body/trim temperature limits are not exceeded.

2. Finally, check in table 20 that packing and other valve parts are available in materials that meet the desired service conditions.

Table 5. Fisher EWD, EWS, and EWT Metal Trim Part Combinations[1] Except for Valves with Cavitrol III or Whisper Trim III Cages

TRIM DESIGNATIONS	VALVE PLUG	CAGE	SEAT	
			Disk Seat, Retainer for PTFE Seat Constructions	Seat Ring for Metal Seat Constructions
1 (standard trim for all valves except EWT and those in CF8M. Trim 57 is standard for EWT. Trim 29 is standard for all valves in CF8M)	S41600 heat treated	17-4 SST HT	- - -	S41600 or CA15[5] (S41000) for EWD, EWS CA6NM for EWD-1, EWS-1, EWT-1
3 and 3H[2][7]	S31600 w/seat and guide hard faced w/CoCr-A hardfacing alloy	R30006 or R30016 (alloy 6)[3]	S31600 w/seat hard faced w/CoCr-A hardfacing alloy[4]	S31600 w/seat hard faced w/CoCr-A hardfacing alloy[4]
4[6]	S31600	17-4 SST HT	S31600	S31600
27	S31600 w/seat and guide hard faced w/CoCr-A hardfacing alloy	316 SST w/electroless nickel coating (ENC)	S31600 w/seat hard faced w/CoCr-A hardfacing alloy[4]	S31600 w/seat hard faced w/CoCr-A hardfacing alloy[4]
28[6]	S31600 w/seat hard faced w/CoCr-A hardfacing alloy	316 SST w/electroless nickel coating (ENC)	S31600 w/seat hard faced w/CoCr-A hardfacing alloy[4]	S31600 w/seat hard faced w/CoCr-A hardfacing alloy[4]
29[6] (standard for all valves in CF8M)	S31600	316 SST w/electroless nickel coating (ENC)	S31600	S31600
37 and 37H[2][7]	S31600 w/seat and guide hard faced w/CoCr-A hardfacing alloy	17-4 SST HT	S31600 w/seat hard faced w/CoCr-A hardfacing alloy[4]	S31600 w/seat hard faced w/CoCr-A hardfacing alloy[4]
57 (standard for all EWT valve bodies in all materials except CF8M)	S41600 heat treated	17-4 SST HT	S31600	- - -

1. Nonferrous alloy combinations are also available. Consult your Emerson Automation Solutions sales office for details.
2. Trims 3H and 37H have clearances for high-temperature service.
3. Available only in linear, quick-opening, equal percentage, and Whisper Trim I cages.
4. Solid cast alloy 6 seat ring is used instead for NPS 4x2, 10x8, and 12x8 valve sizes.
5. CA15 is used for NPS 8x6 CL900 EWD and EWS.
6. Not for use with Whisper Trim I with 5-3/8 inch and larger ports.
7. With C-Seal trim, 3H, and 37H use solid cast Alloy 6 seat ring for NPS 8x4, 10x8, and 12x8 sizes.

EWD-1, or EWT-1 Valve with Whisper Trim III Cage

1. Choose a trim combination for the service conditions according to figure 15 or 16, while making sure from table 19 that this combination provides the desired trim materials.

2. Finally, check in table 20 that packing and other valve parts are available in materials that meet the desired service conditions.

ANSI/FCI Class VI Shutoff Capabilities

EWS valves with metal seat constructions and EWT valves with soft seat and metal seat constructions can provide ANSI/FCI Class VI shutoff capabilities. See tables 6 and 7.

Table 6. Class VI Shutoff Availability

Valve	Port Size, Inches	Seat	Minimum Seat Load
EWS	≤ 7	Metal	300 lbs/lineal inch
EWT	$\geq 3.4375 \leq 7$	Soft	See Catalog 14
EWT	$\geq 3.4375 \leq 7$	Metal	300 lbs/lineal inch

Table 7. Class VI Trim Materials

VALVE	CAGE	VALVE PLUG	SEAT RING	SEAL RING	TRIM TEMPERATURE LIMIT	
					°C	°F
EWS	316 SST/ ENC	S31600/CoCr-A (alloy 6) seat	S31600	NA	Not a limiting factor	
EWT	316 SST / ENC	S31600	S31600/PTFE	UHMWPE(1) R30003	-29 to 66	-20 to 150
	316 SST / ENC	S31600/CoCr-A seat	S31600	UHMWPE R30003	-101 to 66	-150 to 150
	17-4 SST (17-4PH SST)	S41600	S31600/PTFE	UHMWPE R30003	-29 to 66	-20 to 150
	17-4 SST	S41600	S31600	UHMWPE R30003	-29 to 66	-20 to 150

1. UHMWPE (Ultra High Molecular Weight Polyethylene)

Fisher TSO (Tight Shutoff) Trim Capabilities

See figure 6 and tables 8, 9, and 10. For additional information contact your Emerson Automation Solutions sales office.

Table 8. TSO (Tight Shutoff) Leakage Class

Leakage Class	Maximum Leakage	Test Medium	Test Pressure	Test Procedure
TSO (Tight Shutoff)	Valves with TSO trim are factory tested to a more stringent Fisher test requirement of no leakage at time of shipment.	Water	Service ΔP(1)	ANSI/FCI Class V test procedure B

1. Specify service Δ P when ordering.

Table 9. TSO Shutoff Availability

VALVE	CONSTRUCTION
EWT	Std or Cavitrol III trim. Replaceable, protected soft seat

Table 10. Port Diameters, Valve Plug Travel, Yoke Boss Diameters for TSO (Tight Shutoff) Trim

VALVE	TRIM	MAX TRAVEL		YOKE BOSS SIZE		PORT DIAMETER				C_V REDUCTION AT 100% TRAVEL(1)	UNBALANCE AREA
						Nominal		Actual TSO			
		mm	Inch	mm	Inch	mm	Inch	mm	Inch		Inch^2
EWT NPS 6x4	Std	50.8	2	90	3-9/16	111	4.375	106	4.1875	4% (linear) 3% (equal percent)	0.154
EWT NPS 8x6 and 10x6(2)	Std	50.8	2	90 127	3-9/16 5	179	7	173	6.8125	2%	0.30
		102	4	90	3-9/16					2%	

1. This column lists the percent reduction of published maximum C_V of the trim listed in the TRIM column.
2. NPS 10x6 has a valve outlet area identical to the NPS 8x6.

Installation

Unless limited by seismic criteria, the valve body can be installed in any position (as long as sufficient support is provided if a fabricated extension bonnet is used). However, the normal method is with the actuator vertical above the valve, since nonvertical positions may cause uneven trim wear and decreased trim life.

Flow through the valve body must be in the direction indicated by the flow direction arrow on the valve body. Consider installing an upstream strainer, especially if the valve body includes slotted or multihole Whisper Trim or Cavitrol cages.

Dimensions are shown in figure 19.

Figure 8. Typical Trim Used in Fisher EWD, EWS, or EWT Valves Except Those with Cavitrol III or Whisper Trim III Cages (tables 11, 12, and 13 should be used along with these graphs to determine specific limits based on valve size and trim selection)

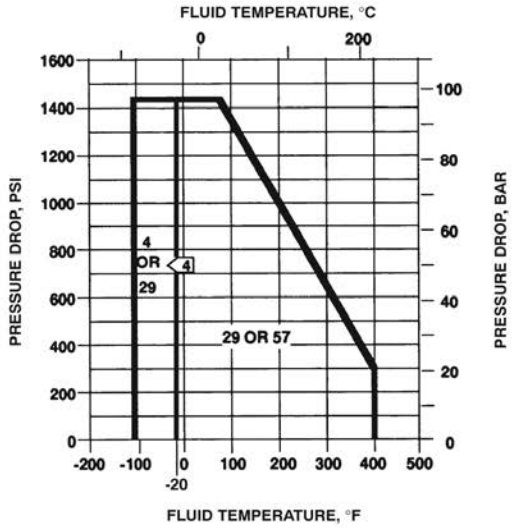

FOR PTFE SEATING WITH ALL CL600 OR NPS 12x8 CL900 BODY MATERIALS 5 2

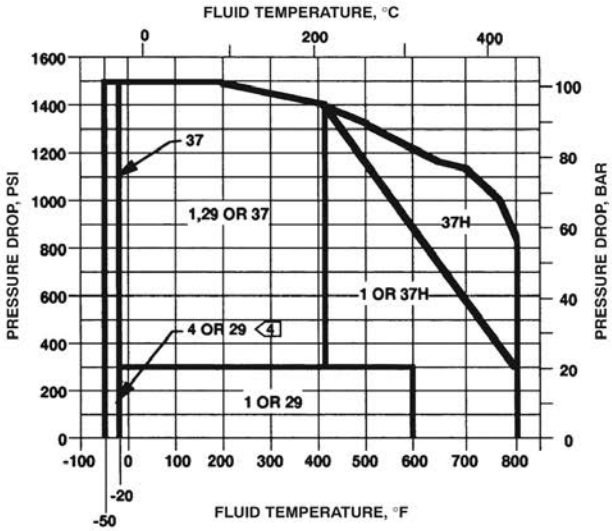

WITH CL600 OR NPS 12x8 CL900 WCC OR LCC STEEL BODY 5 2

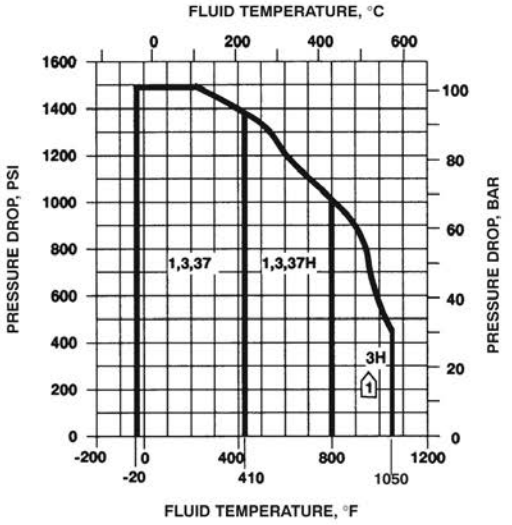

A6334-2

WITH CL600 OR NPS 12x8 CL900 WC9 CHROME MOLY STEEL BODY 5 2

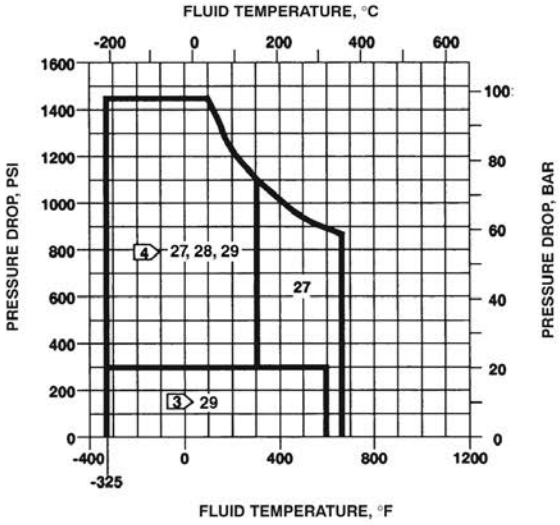

WITH CL600 OR NPS 12x8 CL900 CF8M (316SST) BODY 5 2

NOTES:
1 Be especially careful to specify service temperature fi trim 3,4, or 37 is selected, as different thermal expansion rates require special plug clearances, also, use trim 37H instead of trim 4 for non-lubricating fluids such as superheated steam or dry gasses between 149°C (300°F) AND 316°C (600°F).
2 Do not exceed the maximum pressure and temperature for the class rating of the body material used, even through the trims shown may have higher capabilities.
3 Use trim 27 instead of trim 29 for non-lubricating fluids such as superheated steam or dry gasses between 149°C (300°F) AND 316°C (600°F).
4 Trims 4 AND 29 may be used over 300 PSI only with clean, dry gas.
5 EWD, EWS, and EWT NPS 12x8 CL900 limited to CL600 pressure drops. See figure 9 and 10 EWD-1, EWS-1, and EWT-1 for full CL900 NPS 12x8 pressure drops.

Table 11. Valve/Trim Temperature Capabilities[1] for CL300 or 600 Fisher EWD, EWS, and EWT Valves with 2-Inch (51 mm) or 3-Inch (76 mm) Travel (Except those with Cavitrol III or Whisper Trim III Cages) (figures 7 and 8 should be used along with this table to determine specific limits based on valve size and trim selection)

VALVE/BONNET MATERIAL	TRIM DESIGNATION FROM TABLE 5	VALVE SIZE, NPS	MATERIAL TEMPERATURE CAPABILITY			
			°C Min	°C Max	°F Min	°F Max
WCC steel	1	4 x 2	-29	399	-20	750
		6 x 4	-29	343	-20	650
		8 x 4	-29	329	-20	625
		8 x 6 or 10 x 6[3]	-29	316	-20	600
		12 x 6	-29	260	-20	500
		12 x 8 or 10 x 8	-29	427	-20	800
	29, 85	4 x 2	-29	316	-20	600
		6 x 4	-29	221	-20	430
		8 x 4	-29	218	-20	425
		8 x 6 or 10 x 6[3]	-29	204	-20	400
		12 x 6	-29	174	-20	345
		12 x 8 or 10 x 8	-29	316	-20	600
	37	4 x 2 through 12 x 8	-29	210	-20	410
	37H	4 x 2 through 12 x 8	210	427	410	800
	57	4 x 2 through 12 x 8	-29	204	-20	400
LCC steel	1	4 x 2	-29	343	-20	650
		6 x 4	-29	343	-20	650
		8 x 4	-29	329	-20	625
		8 x 6 or 10 x 6[3]	-29	329	-20	625
		12 x 6	-29	260	-20	500
		10 x 8 or 12 x 8	-29	343	-20	650
	57	4 x 2 through 10 x 8	-29	204	-20	400
	29, 85	4 x 2	-46	316	-50	600
		6 x 4	-46	218	-50	425
		8 x 4	-46	218	-50	425
		8 x 6 or 10 x 6[3]	-46	204	-50	400
		12 x 6	-46	163	-50	325
		10 x 8 or 12 x 8	-46	316	-50	600
	37	4 x 2 through 12 x 8	-46	210	-50	410
	37H	4 x 2 through 12 x 8	210	343	410	650
WC9 chrome moly steel	1	4 x 2	-29	399	-20	750
		6 x 4	-29	343	-20	650
		8 x 4	-29	329	-20	625
		8 x 6 or 10 x 6[3]	-29	316	-20	600
		12 x 6	-29	260	-20	500
		12 x 8 or 10 x 8	-29	427	-20	800
	3	4 x 2 through 12 x 8	-29	427	-20	800
	3H	4 x 2 through 12 x 8	427	566	800	1050
	27, 87	4 x 2	-29	343	-20	650
		6 x 4	-29	221	-20	430
		8 x 4	-29	218	-20	425
		8 x 6 or 10 x 6[3]	-29	204	-20	400
		12 x 6	-29	163	-20	325
		12 x 8 or 10 x 8	-29	343	-20	650
	29, 85	4 x 2	-29	316	-20	600
		6 x 4	-29	221	-20	430
		8 x 4	-29	218	-20	425
		8 x 6 or 10 x 6[3]	-29	204	-20	400
		12 x 6	-29	163	-20	325
		12 x 8 or 10 x 8	-29	316	-20	600
	37	4 x 2 through 12 x 8	-29	210	-20	410
	37H	4 x 2 through 12 x 8	210	427	410	800
	57	4 x 2 through 12 x 8	-29	204	-20	400
CF8M (316 SST)	27	4 x 2 through 12 x 8	-198[2]	343	-325[2]	650
	28	4 x 2 through 12 x 8	-198[2]	149	-325[2]	300
	29, 85	4 x 2 through 12 x 8	-198[2]	316	-325[2]	600

1. For metal trim parts only.
2. May be used down to -254°C (-425°F) if manufacturing process includes Charpy Impact test.
3. NPS 10x6 has a valve outlet area identical to the NPS 8x6.

Table 12. 4-Inch (102 mm) Travel Whisper Trim I Fisher EWD and EWT Valve Body/Trim Temperature Capabilities(1) (CL150 - 600 and NPS 8 x 6, CL900) (figure 8 should be used along with this table to determine specific limits based on valve size and trim selection)

BODY/BONNET MATERIAL(2)	TRIM DESIGNATION FROM TABLE 5	VALVE SIZE, NPS	MATERIAL TEMPERATURE CAPABILITY			
			°C		°F	
			Min	Max	Min	Max
WCC steel	1	8 x 6 or 10 x 6(3) 12 x 6	-29 -29	329 285	-20 -20	625 545
	3	8 x 6 or 10 x 6(3) or 12 x 6	-29	427	-20	800
	57	8 x 6 or 10 x 6(3) or 12 x 6	-29	204	-20	400
	37	8 x 6 or 10 x 6(3) or 12 x 6	-29	210	-20	410
	37H	8 x 6 or 10 x 6(3) 12 x 6	210 210	427 363	410 410	800 685
LCC steel	1	8 x 6 or 10 x 6(3)	-29	329	-20	625
	4, 57	8 x 6 or 10 x 6(3)	-46	204	-50	400
	37	8 x 6 or 10 x 6(3)	-29	210	-20	410
	37H	8 x 6 or 10 x 6(3)	210	343	410	650
WC9 chrome moly steel	3	8 x 6 or 12 x 6	-29	427	-20	800
	3H	8 x 6 or 12 x 6	427	566	800	1050

1. For metal trim parts only.
2. Same material also used for bonnet spacer.
3. NPS 10x6 has a valve outlet area identical to the NPS 8x6.

Table 13. Fisher CL900 EWD, EWS, and EWT Valve Body/Trim Temperature Capabilities(1) (figure 8 should be used along with this table to determine specific limits based on valve size and trim selection)

BODY/BONNET MATERIAL	TRIM DESIGNATION FROM TABLE 5	VALVE SIZE, NPS	MATERIAL TEMPERATURE CAPABILITY			
			°C		°F	
			Min	Max	Min	Max
WCC steel	1	8 x 6 12 x 8	-29 -29	316 427	-20 -20	600 800
	29, 85	8 x 6 12 x 8	-29 -29	204 316	-20 -20	400 600
	37	8 x 6 or 12 x 8	-29	210	-20	410
	37H	8 x 6 or 12 x 8	210	427	410	800
	57	8 x 6 or 12 x 8	-29	204	-20	400
LCC steel	1	8 x 6 only	-29	329	-20	625
	4, 37	8 x 6 only	-46	210	-50	410
	37H	8 x 6 only	210	371	410	700
	57	8 x 6 only	-29	204	-20	400
	29, 85	8 x 6 only	-46	204	-50	400
WC9 chrome moly steel	1	8 x 6 12 x 8	-29 -29	316 427	-20 -20	600 800
	3	8 x 6	-29	427	-20	800
	3H	8 x 6	427	566	800	1050
	3	12 x 8	-29	427	-20	800
	3H	12 x 8	427	566	800	1050
	27, 87	8 x 6 12 x 8	-29 -29	204 343	-20 -20	400 650
	29, 85	8 x 6 12 x 8	-29 -29	204 316	-20 -20	400 600
	37	8 x 6 or 12 x 8	-29	210	-20	410
	37H	8 x 6 or 12 x 8	210	427	410	800
	57	8 x 6 or 12 x 8	-29	204	-20	400
316 SST (CF8M)	27, 87	8 x 6 or 12 x 8	-198(2)	343	-325(2)	650
	29, 85	8 x 6 or 12 x 8	-198(2)	316	-325(2)	600

1. For metal trim parts only.
2. May be used down to -254°C (-425°F) if manufacturing process includes Charpy impact test.

Figure 9. Typical Trim Used in Fisher EWD, EWS, and EWT NPS 8x6 CL900 Valves with Standard Cages and EWD-1, EWS-1, and EWT-1 NPS 12x8 CL900 Valves with Standard Cages (see table 14)

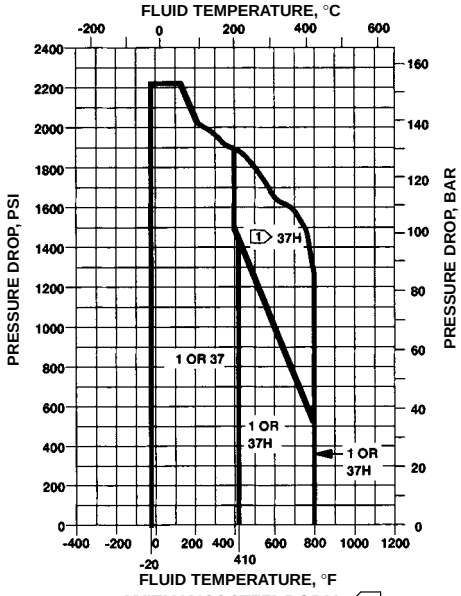

WITH WCC STEEL BODY 1

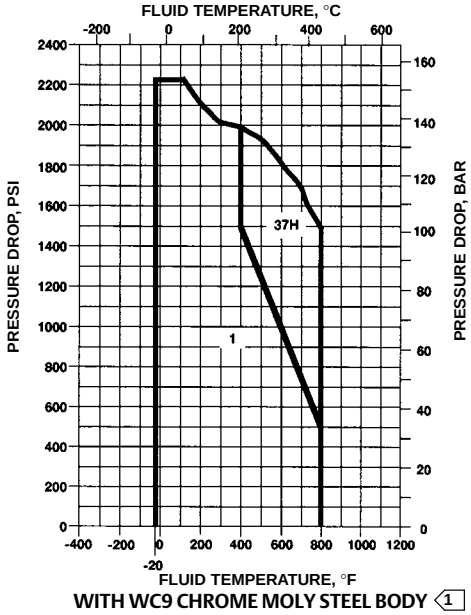

WITH WC9 CHROME MOLY STEEL BODY 1

NOTE:
1 Do not exceed the maximum pressure and temperature for the class rating of the body material used, even through the trims shown may have higher capabilities.

Figure 10. Typical Trim Used in NPS 8x6 CL900 Fisher EWD, EWS, EWT and NPS 12x8 CL900 EWD-1, EWS-1, and EWT-1 Valves with Standard Cages (see table 14)

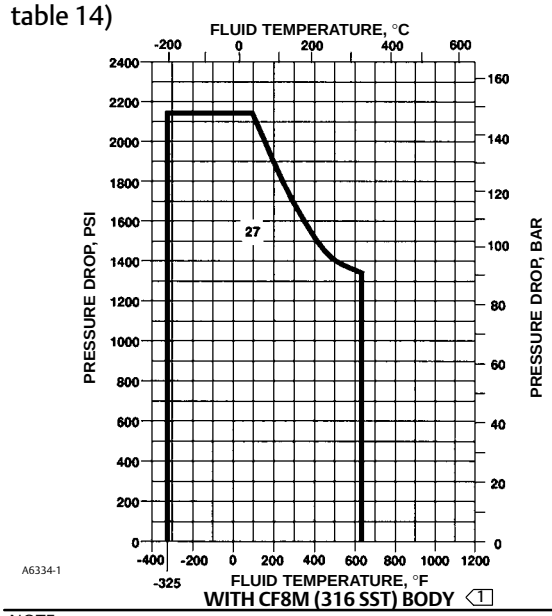

WITH CF8M (316 SST) BODY 1

NOTE:
1 Do not exceed the maximum pressure and temperature for the class rating of the body material used, even through the trims shown may have higher capabilities.

Table 14. NPS 8x6 CL900 Fisher EWD, EWS, EWT and NPS 12x8 CL900 EWD-1, EWS-1, and EWT-1 Metal Trim Part Combinations Except for Valves with Whisper Trim III Cages

Trim Designation	Valve Plug	Cage	Seat Ring
1	S41600 (416 SST) heat treated	17-4 SST H900	Heat-treated CA6NM(1)
27	316 SST with seat and guide hard-faced with CoCr-A	316 SST with electroless nickel coating (ENC)	316 SST with seat hard-faced with CoCr-A
37 and 37H(2)	S31600 with seat and guide hard-faced with CoCr-A	17-4 SST H900	S31600 with seat hard-faced with CoCr-A

1. CA6NM is similar to 410 SST.
2. Trim 37H has clearances for high-temperature service.

Figure 11. Detail of 2-Stage Cavitrol III Cage in CL300 or 600 Fisher EWT Valve

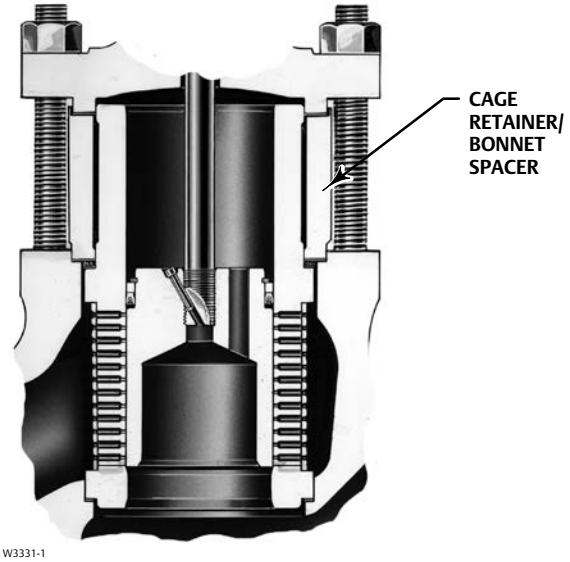

Figure 12. Typical Trim Used in Cavitrol III Cage Constructions with Steel or Stainless Steel Valves (see tables 15)

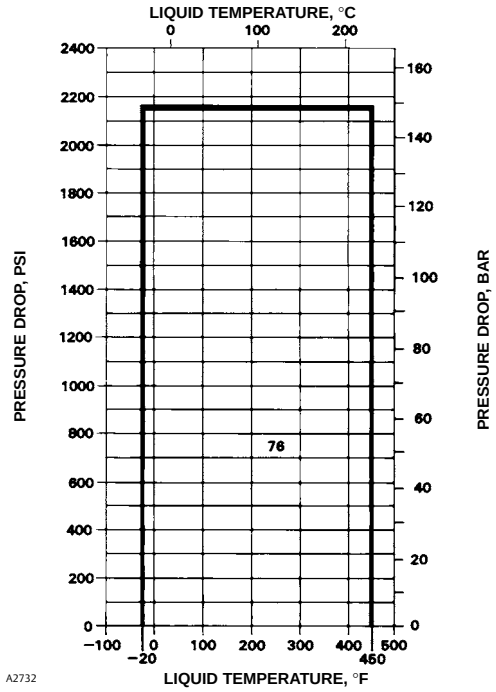

NOTE:
Do not exceed the maximum pressure and temperature for the class rating of the body material used, even through the trims shown may have higher capabilities.

Table 15. Cavitrol III[1] Metal Trim Part Combination

Trim Designation	Valve Plug	Cage	Cage Retainer[2]	Seat Ring
76	Heat-treated S42000 (420 SST)	17-4 SST H900	S31600 (316 SST)	S17400 with H900 heat-treat condition

1. Available only in EWT valve.
2. Not used in NPS 12x8 or 8x6 CL900 valves.

Table 16. Cavitrol III Valve Body/Trim Temperature Capabilities

TRIM DESIGNATION FROM TABLE 15	VALVE BODY and BONNET		MATERIAL TEMPERATURE CAPABILITY			
			°C		°F	
			Min	Max	Min	Max
76	WCC carbon steel or WC9 chrome moly steel		-29	These materials not limiting factors	-20	These materials not limiting factors
	LCC carbon steel		-46		-50	
	S31600 (316 SST)	NPS 4x2 valve	-29	204	-20	400
		NPS 6x4 valve	-29	149	-20	300
		NPS 8x4 valve	-29	135	-20	275
		NPS 8x6 or 10x6[1] valve[2]	-29	121	-20	250
		NPS 12x6 valve	-29	107	-20	225
		NPS 12x8 valve[3]	-29	177	-20	350

1. NPS 10x6 has a valve outlet area identical to the NPS 8x6.
2. This valve body/trim combination not available in CL900 valve.
3. This valve body/trim combination available in all NPS 12x8 rating classes.

Figure 13. Fisher EWT Metal-Seat Valve with Whisper Trim I Cage

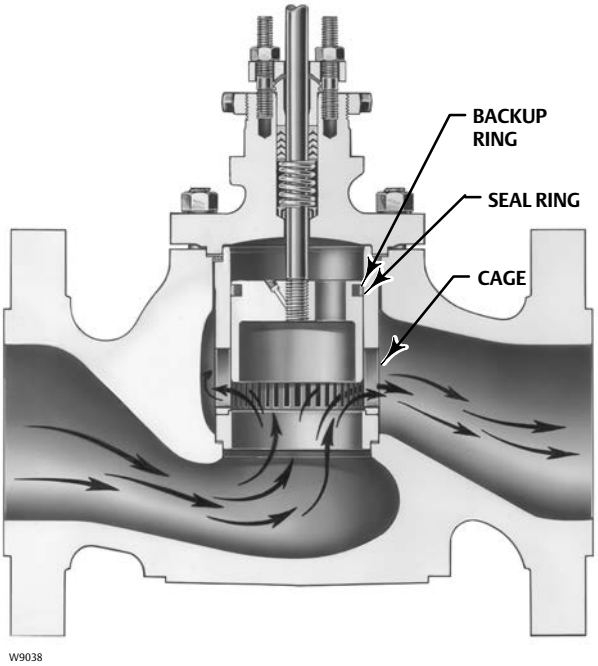

Figure 14. Fisher EWD Valve with Whisper Trim III Cage (shown with optional drain plug)

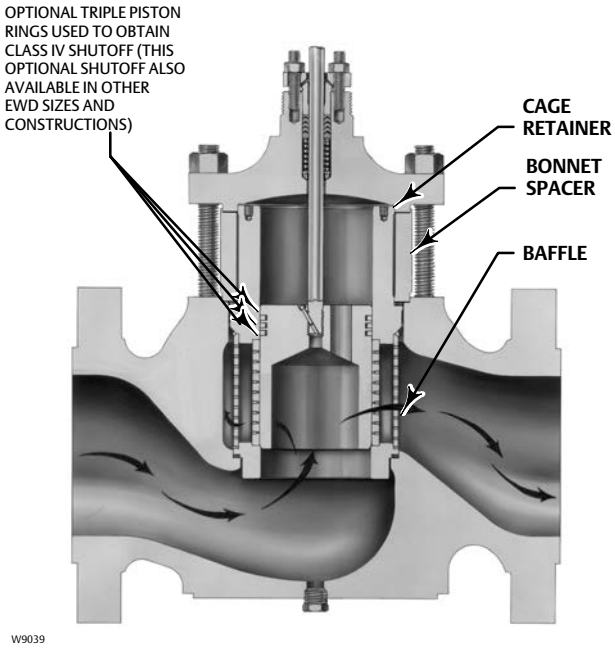

Table 17. Metal Trim Part Combinations for Fisher EWD, EWS, and EWT Valves with Whisper Trim III Cages

Trim Designation	Valve Plug	Cage	Cage Retainer	Baffle (for Level D3 Cage Only)	Seat Ring for Metal-Seat Construction	Disk Seat and Retainer for PTFE-Seat Construction	Stem
19.1 through 111.1, 177.8 and 203.2 mm (0.75 through 4.375, 7 and 8 Inch) Port Sizes							
301G	S41600	17-4 SST	--	Steel	S41600	--	S31600
301GC(3)	S41600	17-4 SST	--	Steel	--	S41600/ S31600	S31600
312G(1)	S31600/CoCr-A Seat & Guide	316/ENC Electroless Nickel Coated	--	S31600	R30006	--	S20910
312GC(1)(3)	S31600/CoCr-A Seat & Guide	316/ENC Electroless Nickel Coated	--	S31600	--	R30006/ S31600	S20910
315G(1)	S31600/CoCr-A Seat & Guide	316 SST Chrome	--	S31600	R30006	--	S20910
315GC(1)(3)	S31600/CoCr-A Seat & Guide	316 SST Chrome	--	S31600	--	R30006/ S31600	S20910
318G(2)	F22/CoCr-A Seat & Guide	2.25 Cr-1 Mo Nitrided	--	WC9	R30006	--	S41000/ S42200(4)
306	S31803/Ultimet Seat & Guide	2205 Duplex(6) Plate	--	S31803	S31803/Ultimet	--	S31803
307G	S31600/CoCr-A Seat & Guide	17-4 SST	--	Steel	R30006	--	S31600
307GH(5)	S31600/CoCr-A Seat & Guide	17-4 SST	--	Steel	R30006	--	S31600
136.5 mm (5.375 Inch) Port							
301	S17400	416 SST	WCC/ENC	Steel	S41600	--	S31600
301 A(2)	S17400	416 SST	WCC/Nitrided	Steel	S41600	--	S31600
301 C(3)	S17400	416 SST	WCC/ENC	Steel	--	S41600/ S31600	S31600
304	S31600/CoCr-A Seat & Guide	416 SST	WCC/ENC	Steel	S31600/ CoCr-A Seat	--	S31600
312(1)	S31600/CoCr-A Seat & Guide	316/ENC Electroless Nickel Coated	316/ENC Electroless Nickel Coated	S31600	R30006	--	S20910
312C(1)(3)	S31600/CoCr-A Seat & Guide	316/ENC Electroless Nickel Coated	316/ENC Electroless Nickel Coated	S31600	--	R30006/ S31600	S20910
315(2)	S31600/CoCr-A Seat & Guide	316 SST/ Electrolyzed Chrome Coat	S31600/ Electrolyzed Chrome Coat	S31600	S31600/CoCr-A	--	S31600
318(2)	S31600/CoCr-A Seat & Guide	2.25 Cr-1 Mo Nitrided	WC9 Nitrided	WC9	S31600/ CoCr-A Seat	--	S41000/ S42200(4)
306	S31803/Ultimet Seat & Guide	2205 Duplex(6) Chrome Plate	--	S31803	S31803/Ultimet	--	S31803

1. NACE compatible trims meets NACE MR0175 2002, MR0175/ISO15156, MR0103
2. Not for use with EWT construction.
3. Not for use with EWD construction.
4. Trims 318G and 318 use S41000 stem up to 538°C (1000°F) and S42200 stem above 538°C (1000°F)
5. For high temperature service
6. 22 Cr- 5 Ni duplex stainless steel

Table 18. Valve/Trim Temperature Capabilities for Fisher EWD, EWS, and EWT Valves with Whisper Trim III Cages

VALVE/BONNET/ BONNET SPACER MATERIAL	TRIM DESIGNATION FROM TABLE 17	VALVE SIZE, NPS	MATERIAL TEMPERATURE CAPABILITY			
			°C		°F	
			Min	Max	Min	Max
19.1 through 111.1, 177.8 and 203.2 mm (0.75 through 4.375, 7 and 8 Inch) Port Size						
WCC or WC9	301G	4X2	-29	399	-20	750
		6X4	-29	316	-20	625
		8x4	-29	316	-20	625
		8x6 or 10x6	-29	427	-20	800
		10x8	-29	427	-20	800
		12x8	-29	427	-20	800
	301GC	4X2	-29	204	-20	400
		6X4	-29	204	-20	400
		8x4	-29	204	-20	400
		8x6 or 10x6	-29	204	-20	400
		10x8	-29	204	-20	400
		12x8	-29	204	-20	400
	312G	4X2	-29	316	-20	600
		6X4	-29	218	-20	425
		8x4	-29	218	-20	425
		8x6 or 10x6	-29	316	-20	600
		10x8	-29	316	-20	600
		12x8	-29	316	-20	600
	312GC	4X2	-29	204	-20	400
		6X4	-29	204	-20	400
		8x4	-29	204	-20	400
		8x6 or 10x6	-29	204	-20	400
		10x8	-29	204	-20	400
		12x8	-29	204	-20	400
	315G	4X2	-29	316	-20	600
		6X4	-29	218	-20	425
		8x4	-29	218	-20	425
		8x6 or 10x6	-29	316	-20	600
		10x8	-29	316	-20	600
		12x8	-29	316	-20	600
	315GC	4X2	-29	204	-20	400
		6X4	-29	204	-20	400
		8x4	-29	204	-20	400
		8x6 or 10x6	-29	204	-20	400
		10x8	-29	204	-20	400
		12x8	-29	204	-20	400
	318G (WC9 only)	4X2	-29	593	-20	1100
		6X4	-29	593	-20	1100
		8x4	-29	593	-20	1100
		8x6 or 10x6	-29	593	-20	1100
		10x8	-29	593	-20	1100
		12x8	-29	593	-20	1100
	306	4X2	-29	316	-20	600
		6X4	-29	316	-20	600
		8x4	-29	316	-20	600
		8x6 or 10x6	-29	316	-20	600
		10x8	-29	316	-20	600
		12x8	-29	316	-20	600
	307G	4x2 through 12x8	-29	210	-20	410
	307GH	4x2 through 12x8	210	427	410	800

–continued–

Table 18. Valve/Trim Temperature Capabilities for Fisher EWD, EWS, and EWT Valves with Whisper Trim III Cages (continued)

VALVE/BONNET/ BONNET SPACER MATERIAL	TRIM DESIGNATION FROM TABLE 17	VALVE SIZE, NPS	MATERIAL TEMPERATURE CAPABILITY			
			°C		°F	
19.1 through 111.1, 177.8 and 203.2 mm (0.75 through 4.375, 7 and 8 Inch) Port Size						
CF8M	301G	4X2	-29	149	-20	300
		6X4	-29	149	-20	300
		8x4	-29	149	-20	300
		8x6 or 10x6	-29	149	-20	300
		10x8	-29	149	-20	300
		12x8	-29	149	-20	300
	301GC	4X2	-29	149	-20	300
		6X4	-29	149	-20	300
		8x4	-29	149	-20	300
		8x6 or 10x6	-29	149	-20	300
		10x8	-29	149	-20	300
		12x8	-29	149	-20	300
	312G	4X2	-198	343	-325	650
		6X4	-198	343	-325	650
		8x4	-198	343	-325	650
		8x6 or 10x6	-198	343	-325	650
		10x8	-198	343	-325	650
		12x8	-198	343	-325	650
	312GC	4X2	-73	204	-100	400
		6X4	-73	204	-100	400
		8x4	-73	204	-100	400
		8x6 or 10x6	-73	204	-100	400
		10x8	-73	204	-100	400
		12x8	-73	204	-100	400
	315G	4X2	-198	316	-325	600
		6X4	-198	316	-325	600
		8x4	-198	316	-325	600
		8x6 or 10x6	-198	316	-325	600
		10x8	-198	316	-325	600
		12x8	-198	316	-325	600
	315GC	4X2	-73	204	-100	400
		6X4	-73	204	-100	400
		8x4	-73	204	-100	400
		8x6 or 10x6	-73	204	-100	400
		10x8	-73	204	-100	400
		12x8	-73	204	-100	400
	306	4X2	-29	316	-20	600
		6X4	-29	316	-20	600
		8x4	-29	316	-20	600
		8x6 or 10x6	-29	316	-20	600
		10x8	-29	316	-20	600
	306	12x8	-29	316	-20	600

–continued–

Table 18. Valve/Trim Temperature Capabilities for Fisher EWD, EWS, and EWT Valves with Whisper Trim III Cages (continued)

VALVE/BONNET/ BONNET SPACER MATERIAL	TRIM DESIGNATION FROM TABLE 17	VALVE SIZE, NPS	MATERIAL TEMPERATURE CAPABILITY			
			°C		°F	
136.5 mm (5.375 Inch) Port						
WCC or WC9	301	8x6 or 10x6	-29	338	-20	640
		12x6	-29	313	-20	595
	301A	8x6 or 10x6	-29	338	-20	640
		12x6	-29	313	-20	595
	301C	8x6 or 10x6	-29	204	-20	400
		12x6	-29	204	-20	400
	304	8x6 or 10x6	-29	343	-20	650
		12x6	-29	338	-20	640
	312	8x6 or 10x6	-29	204	-20	400
		12x6	-29	177	-20	350
	312C	8x6 or 10x6	-29	204	-20	400
		12x6	-29	177	-20	350
	315	8x6 or 10x6	-29	204	-20	400
		12x6	-29	177	-20	350
	318 (WC9 only)	8x6 or 10x6	-29	427	-20	1100
		12x6	-29	427	-20	1100
	306	8x6 or 10x6	-29	204	-20	400
		12x6	-29	204	-20	400
CF8M	301	8x6 or 10x6	-29	149	-20	300
		12x6	-29	121	-20	250
	301C	8x6 or 10x6	-29	149	-20	300
		12x6	-29	121	-20	250
	304	8x6 or 10x6	-29	149	-20	300
		12x6	-29	121	-20	250
	312	8x6 or 10x6	-29	343	-20	650
		12x6	-29	343	-20	650
	312C	8x6 or 10x6	-29	204	-20	400
		12x6	-29	204	-20	400
	315	8x6 or 10x6	-198	427	-325	800
		12x6	-198	427	-325	800
	306	8x6 or 10x6	-29	316	-20	600
		12x6	-29	316	-20	600

Figure 15. Typical Trim Used in Fisher EWD-1 Valves with Whisper Trim III Cages (see table 19)

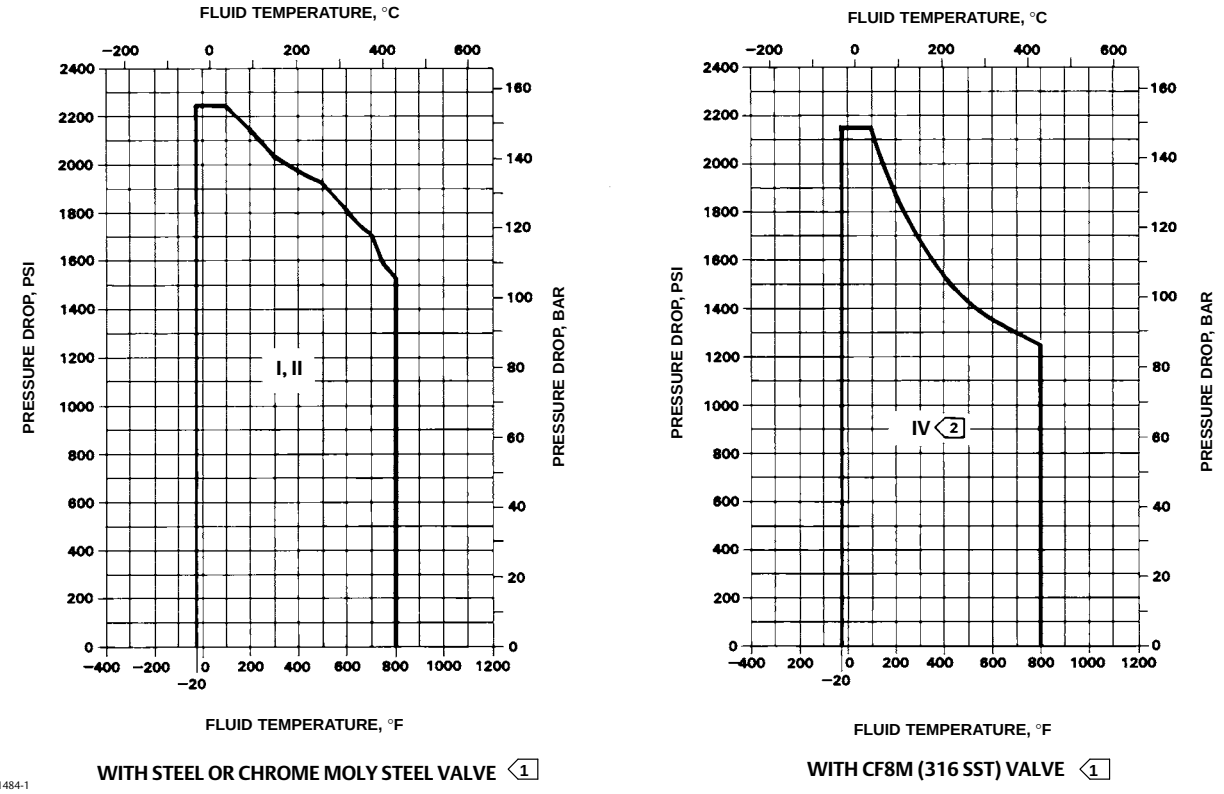

NOTE:
1 Do not exceed the maximum pressure and temperature for the class rating of the body material used, even through the trims shown may have higher capabilities..
2 May be used down to -101°C (-150°F) with level A, B, OR C cage, or with level D cage that has an 18-8 SST baffle.

Table 19. Fisher EWD-1 and EWT-1 Metal Trim Part Combinations for Valves with Whisper Trim III Cages

Trim Designation	Valve Plug	Cage	Seat Ring
I	Heat-treated CA6NM(1)	17-4 SST H1025	Heat-treated CA6NM
II	S31600 (316 SST) with seat and guide hard faced with CoCr-A	17-4 SST H1025	N06600 with seat hard faced with CoCr-A
IV	CF8M (316 SST) with seat and guide hard faced with CoCr-A	17-4 SST H1025	CF8M with seat hard faced with CoCr-A
1. CA6NM is similar to 410 SST.			

Figure 16. Typical Trim Used in Fisher EWT-1 Valves with Whisper Trim III Cages (see table 19)

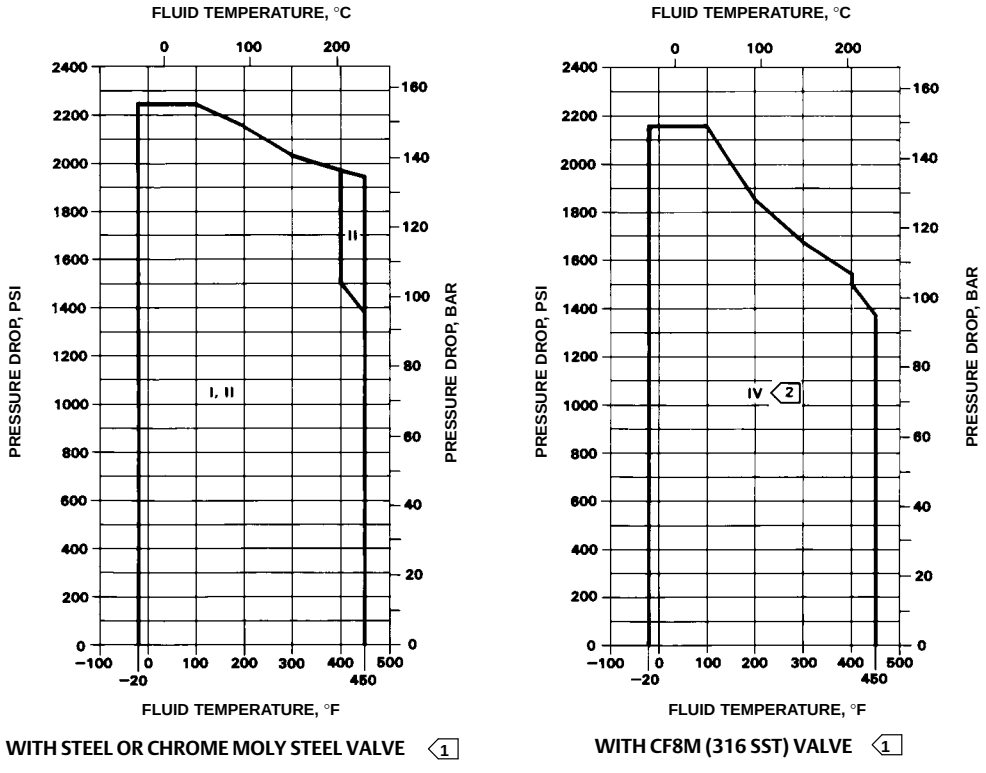

NOTE:
1 Do not exceed the maximum pressure and temperature for the class rating of the body material used, even through the trims shown may have higher capabilities.
2 May be used down to -101°C (-150°F) with level A, B, OR C cage, or with level D cage that has an 18-8 SST baffle.

Table 20. Materials and Temperature Limitations for Other Parts

PART			MATERIAL			MATERIAL TEMPERATURE CAPABILITY °C Min	°C Max	°F Min	°F Max
Body-to-bonnet bolting (see table 24 for NACE bolting materials and temperature limits)	WCC or WC9 valve body	Studs	Steel SA-193-B7, or steel SA-193-B7M for sour service			-29	427	-20	800
		Nuts	Steel SA-194-2H, or steel SA-194-2M for sour service						
	LCC valve body	Studs	Steel SA-193-B7			-46	371	-50	700
		Nuts	Steel SA-194-2H						
	WC9 valve body	Studs	Steel SA-193-B16			-29	593	-20	1100
		Nuts	Steel SA-194-7						
	CF8M (316 SST) valve body	Studs	Steel SA-193-B7			-48	427	-55	800
		Nuts	Steel SA-194-2H						
		Studs	Steel SA-193-B7M for sour service			-46	427	-50	800
		Nuts	Steel SA-194-2HM for sour service			-46	343	-50	650
		Studs	304 SST SA-320-B8			-254	38	-425	100
		Nuts	304 SST SA-194-8						
		Studs	316 SST SA-193-B8M (strain hardened)			-198(1)	427	-325(1)	800
		Nuts	316 SST SA-194-8M						
		Studs	316 SST SA-193-B8M			-198(1)	649	-325(1)	1200
		Nuts	316 SST SA-194-8M						
Disk (all soft-seat constructions)			PTFE			-73	204	-100	400
EWD piston ring	Std. for NPS 4x2 thru 12x6		Graphite (FMS 17F27)			-46(2)	427	-50(2)	800
						-46(2)	482	-50(2)	900
	Std. for NPS 10x8 and 12x8; optional for NPS 4x2 thru 12x6		Graphite FMS 17F39	Oxidizing service—all sizes		-46(2)	538	-50(2)	1000
				Nonoxidizing service	NPS 12x8 CL900 and 12x8 CL600 and smaller	-46(2)	593	-50(2)	1100
Standard NPS 4x2 through 12x6 EWT valve plug seal (except valve with Cavitrol III cage)		Backup ring	Fluorocarbon(3)			-18	204	0	400
			Ethylene-propylene(4)			-40	232	-40	450
			Nitrile(5)	For use with hydrocarbons		-34	71	-30	160
				For use with other fluids		-34	93	-30	200
		Seal ring	Carbon-filled PTFE			-73	232	-100	450
Spring-loaded EWT or EWT-1 valve plug seal (6) (standard for NPS 10x8 and 12x8 valve regardless of cage and all NPS 4x2 through 12x6 valves with Cavitrol III cage; optional in NPS 4x2 through 12x6 valves with other than Cavitrol III cages)		Backup ring	S41600 (416 SST)			-29	427	-20	800
		Retaining ring	S30200 (302 SST)			-254	593	-425	1100
		Seal ring	PTFE with N10276 Spring			-73	232(10)	-100	450(10)
		Anti-extrusion rings	PEEK (PolyEtherEtherKetone)			- - -(11)		- - -(11)	
Valve plug stem and pin			S31600 (316 SST) (S20910, NACE Std)			-198(1)	593	-325(1)	1100
Load ring (NPS 10x8 and 12x8 EWD, EWS, and EWT only)			CB7CU-1 (17-4PH SST)			-102	316	-150	600
			N07718(7)			-254	593	-425	1100
			N05500(7)			-240	260	-400	500
Seat ring, bonnet and cage gaskets			FGM (standard)			-198	593	-325	1100
			PTFE-coated N04400			-73	149	-100	300
Spiral wound gaskets			N06600(7)/laminated graphite FGM (standard)			-198	593	-325	1100
Packing (temperatures shown are material temperature capabilities)			PTFE V-ring			-40	232	-40	450
			PTFE/composition			-73	232	-100	450
			Graphite ribbon/filament			-198	538(9)	-325	1000(9)
			Graphite ribbon for high-temperature oxidizing service			371	649	700	1200
Packing flange, studs and nuts when used with standard bonnet			S31600			-198(1)	593	-325(1)	1100
Packing follower, and packing spring(8) or lantern ring			S31600			-198(1)	593	-325(1)	1100
Packing box ring when used with standard bonnet			S31600						
Extension bonnet bushing		Trims 1 and 4	S41600			-29	427	-20	800
		Other trims	S31600			-198(1)	593	-325(1)	1100

1. May be used down to -254°C (-425°F) if manufacturing process includes Charpy impact test.
2. This minimum is due to thermal expansion differential between piston ring and cage at low temperatures.
3. For high-temperature air, hydrocarbons, and certain other chemicals and solvents, but cannot be used with ammonia, steam, or hot water.
4. Has excellent moisture resistance to hot water and steam and may be used with most fire-resistant hydraulic oils, but cannot be used with petroleum-based fluids and other hydrocarbons.
5. Cannot be used with fire-resistant hydraulic oils.
6. May be used to increase hot water service capability to 232°C (450°F).
7. This material may be used for cyclic temperatures or those above 232°C (450°F).
8. Spring is used only with single PTFE V-ring packing; lantern ring replaces spring in other packings.
9. Except 371°C (700°F) on oxidizing service.
10. If used with PEEK anti-extrusion rings, PTFE/carbon seal ring may be used in temperatures up to 316°C (600°F) for non-oxidizing service or up to 260°C (500°F) for oxidizing service.
11. These materials not limiting factors.

Table 21. Port Diameters, Valve Plug Travel, and Stem and Yoke Boss Diameters[1,9]

VALVE SIZE, NPS	PORT DIAMETER		MAX VALVE PLUG TRAVEL		STEM AND YOKE BOSS DIAMETERS								CAGE STYLE
					Standard				Optional				
					Stem		Yoke Boss		Stem		Yoke Boss		
	mm	Inch	mm	Inch	mm	Inch	mm	Inch	mm	Inch	mm	Inch	
4 x 2	33.3	1.3125	31.8	1.25	12.7	1/2	71.4	2 13/16	19.1	3/4	90.5	3 9/16	Whisper Trim III only
	58.7	2.3125	34.9	1.375									
	58.7	2.3125	28.6	1.125									Quick-opening, linear, Eq.%, Whisper Trim I, WhisperTrim III, or Cavitrol[1]
6 x 4, 8 x 4	111	4.375	50.8	2	12.7	1/2	71.4	2 13/16	19.1	3/4	90.5	3 9/16	
									25.4 or 31.8	1 or 1 1/4	127	5	
	87.3	3.438	50.8	2	12.7	1/2	71.4	2 13/16	19.1	3/4	90.5	3 9/16	Whisper Trim III only
			76.2	3	12.7	1/2	71.4	2 13/16	25.4 or 31.8	1 or 1 1/4	127	5	
8 x 6, 10 x 6[8], or 12 x 6	178	7	50.8	2	19.1	3/4	90.5	3 9/16	25.4 or 31.8	1 or 1 1/4	127	5	Quick-opening, linear, Eq.%, Whisper Trim I, or Cavitrol[1]
8 x 6, 10 x 6[8], or 12 x 6	178	7	76.2	3									Cavitrol only[1]
			102[2]	4[2]	19.1	3/4	90.5	3 9/16	- - -				Whisper Trim I
8 x 6, 10 x 6[8]	178	7	76.2	3	19.1	3/4	90.5	3 9/16	25.4 or 31.8	1 or 1 1/4	127	5	Whisper Trim III only
	178	7	102	4									
	137	5.375	127[3]	5[3]									
12 x 6	137	5.375	165[3]	6.5[3]									
10 x 8	203	8	76.2	3	19.1	3/4	90.5	3 9/16	25.4 or 31.8	1 or 1 1/4	127	5	Quick-opening, linear, or Eq. %
			152	6									Whisper Trim III only
	178	7	152	6									Whisper Trim III only
12 x 8 — CL300[4] or CL600[4]	203	8	76.2	3	19.1	3/4	90.5	3 9/16	25.4 or 31.8	1 or 1 1/4	127	5	Quick-opening, linear, or Eq. %
	203	8	152	6									Whisper Trim III only
	178	7											
12 x 8 — CL900	203	8	76.2	3	25.4	1	127	5	19.1	3/4	90.5	3 9/16	Quick-opening, linear, or Eq. %
									25.4	1	127H[5]	5H[5]	
					31.8	1 1/4			31.8	1 1/4			
	197[6]	7.75[6]	152	6	31.8	1 1/4	127	5	- - -				Whisper Trim III only
	171[7]	6.75[7]											

1. Except for Cavitrol III cages, which are covered in separate documentation
2. Bonnet spacer required. This travel available only in CL300 or 600 EWD or EWT
3. Bonnet spacer required for EWD or EWT valve, but not EWS valve
4. Bonnet spacer required for EWD, EWS, and EWT valve.
5. H indicates heavy actuator-to-bonnet bolting is required
6. Port diameter for level A, B, or C cage.
7. Port diameter for level D cage
8. NPS 10x6 has a valve outlet area identical to the NPS 8x6.
9. Refer Fisher Bulletin 80.1:010 Whisper Trim III (D100191X012) for more information on Whisper Trim III.

Figure 17. Typical ENVIRO-SEAL and HIGH-SEAL Packing Systems

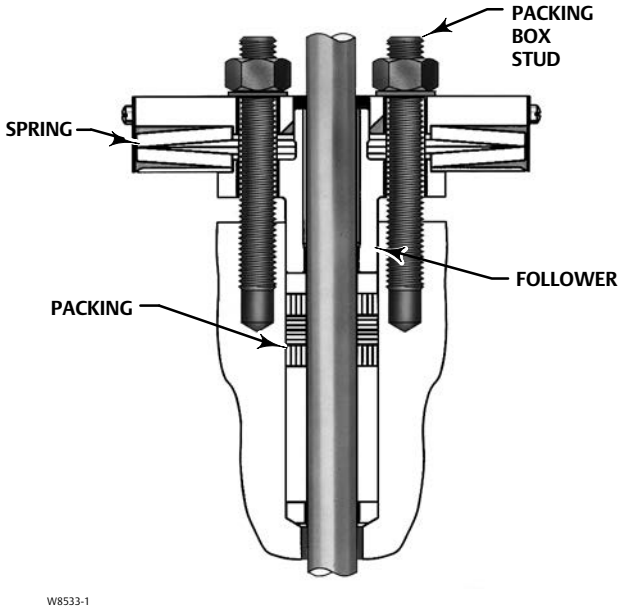

TYPICAL HIGH-SEAL PACKING SYSTEM WITH GRAPHITE ULF PACKING

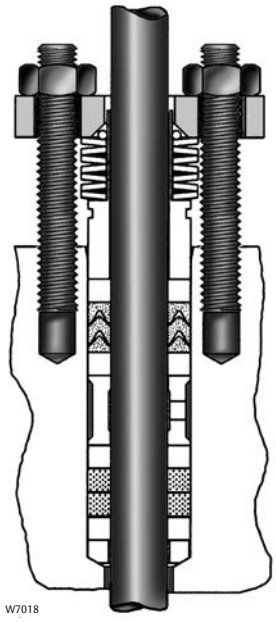

TYPICAL ENVIRO-SEAL PACKING SYSTEM WITH DUPLEX PACKING

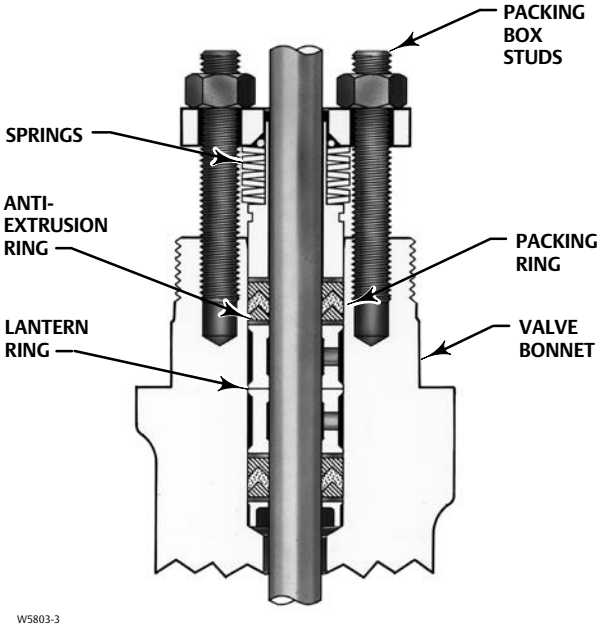

TYPICAL ENVIRO-SEAL PACKING SYSTEM WITH PTFE PACKING

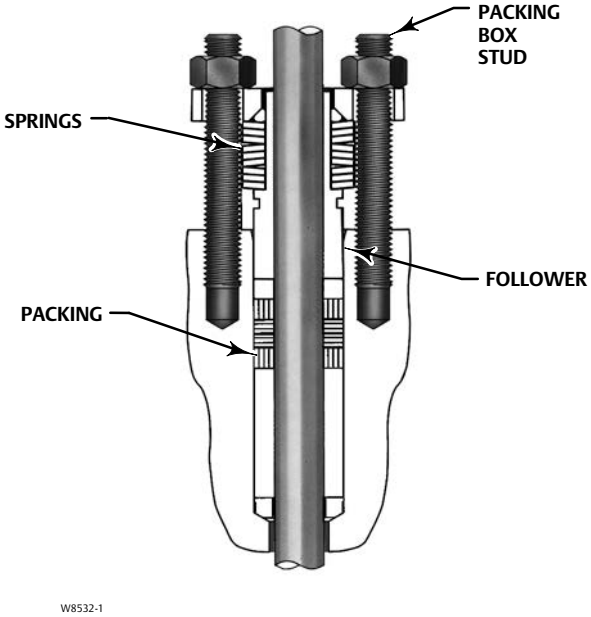

TYPICAL ENVIRO-SEAL PACKING SYSTEM WITH GRAPHITE ULF PACKING

Table 22. Approximate Weights

END CONNECTION		VALVE SIZE, NPS															
		4 x 2		6 x 4		8 x 4		8 x 6		10 x 6[1]		12 x 6		10 x 8		12 x 8	
		kg	Lb	kg	Lb	kg	Lb	kg	Lb	kg	Lb	kg	Lb	kg	Lb	kg	Lb
CL300		84	185	150	330	234	515	284	625	348	765	500	1102	567	1250	653	1440
CL600	Flanged	100	220	195	430	272	600	308	680	431	950	721	1590	744	1640	857	1890
	Buttwelding	61	135	122	270	177	390	272	600	380	839	526	1160	512	1130	658	1450
CL900	Flanged	---						612	1350	---						1361	3000
	Buttwelding	---						454	1000	---						1293	2850

1. NPS 10x6 has a valve outlet area identical to the NPS 8x6.

Figure 18. ENVIRO-SEAL Bellows Seal Bonnet

W5852-1

Table 23. Bonnet Selection Guidelines

BONNET STYLE (CL300, 600)(1)	PACKING	IN-BODY PROCESS TEMPERATURE LIMITS(2)	
		°C	°F
Plain Bonnet ■ Standard for NPS 2, 4, and 6 nominal trim sizes ■ Standard for NPS 10x8 and 12x8 valves (in cast iron, WCC). Not available in S31600	PTFE V-ring	-18 to 232	0 to 450
	PTFE/composition	-18 to 232	0 to 450
	Graphite ribbon/filament	-18 to maximum shown in table 20	0 to maximum shown in table 20
Style 1 Cast Extension Bonnet ■ Optional for NPS 2, 4, and 6 nominal trim sizes ■ Standard for NPS 10x8 and 12x8 valves (in S31600). Optional in WCC; not available in cast iron	PTFE V-ring	-46 to 427	-50 to 800
	PTFE/composition		
	Graphite ribbon/filament	to maximum shown in table 20	to maximum shown in table 20
Style 2 Cast Extension Bonnet ■ Optional for NPS 2, 4, and 6 nominal trim sizes ■ Optional for NPS 10x8 and 12x8 valves (in WCC). Not available in cast iron or S31600	PTFE V-ring	-101 to 427	-150 to 800
	PTFE/Composition		
	Graphite ribbon/filament	to maximum shown in table 20	to maximum shown in table 20
ENVIRO-SEAL Bellows Seal Bonnet ■ Optional for NPS 2, 4, 6, and 8 nominal trim sizes. Maximum travel is 2 inches	PTFE	For exceptional stem sealing capabilities. See Bulletin 59.1:070, ENVIRO-SEAL Bellows Seal Bonnets, (D101641X012) for pressure/temperature ratings.	For exceptional stem sealing capabilities. See Bulletin 59.1:070, ENVIRO-SEAL Bellows Seal Bonnets, (D101641X012) for pressure/temperature ratings.
	Graphite ULF		

1. For CL900 valve bodies, only the plain bonnet is available. Consult your Emerson Automation Solutions sales office for assistance if application conditions indicate the need for an extension bonnet for a CL900 valve body.
2. These in-body process temperatures assume an outside, ambient temperature of 21°C (70°F) and no insulation on the bonnet. When using any packing at low process temperatures, a cast extension bonnet may have to be used to prevent packing damage which could result from the formation of valve stem frost. Material selection for trim and other components will also be limiting factors.

Table 24. Bolting Materials and Temperature Limits for Bolting Compliance with NACE MR0175-2002, NACE MR0175/ISO 15156, and NACE MR0103. Environmental restrictions may apply.

VALVE BODY MATERIAL		BOLTING MATERIAL	TEMPERATURE CAPABILITIES			
			°C		°F	
			Min	Max	Min	Max
Non-exposed bolting (Standard)						
WCC	Studs	Steel SA-193-B7	-7	232	20	450
	Nuts	Steel SA-194-2H				
	Studs	Steel SA-193-B7	232	427	450	800
	Nuts	Steel SA-194-2H lubricated				
CF8M (316 SST)	Studs	Steel SA-193-B7 or B8M strain hardened	-48	232	-55	450
	Nuts	Steel SA-194-2H or 8M				
	Studs	Steel SA-193-B8M strain hardened or B7	232	427	450	800
	Nuts	Steel SA-194-8M lubricated or 2H lubricated				
Exposed bolting (Optional) Requires Derating of Valve(2) When These Body-to-Bonnet Bolting Materials are Used						
WCC and CF8M	Studs	Steel SA-193-B7M	-46(1)	232	-50(1)	450
	Nuts	Steel SA-194-2HM				
	Studs	Steel SA-193-B7M	232	427	450	800
	Nuts	Steel SA-194-2HM lubricated				

1. Minimum temperature is -29°C (-20°F) with WCC valve body material.
2. Derating is not required for CL300 valves. Derating may be required for valves rated at CL600 or 900. Emerson Automation Solutions sales office for assistance in determining the derating of valves when these body-to-bonnet bolting materials are used.

Table 25. Dimensions

VALVE SIZE, NPS	A								G (MAX)	
	Class, End Connection Style(1)									
	CL150	CL300		CL600		CL900			CL150, 300, and 600	CL900
	RF	RF	RTJ	RF, BW	RTJ	RF	RTJ	BW		
	mm									
4 x 2	352	368(2)	384	394(2)	397	---	---	---	108	---
6 x 4	451	473(2)	489	508(2)	511	---	---	---	135	---
8 x 4	543	568(2)	584	610(2)	613	---	---	---	176	---
8 x 6	543	568(2)	584	610(2)	613	914(3)	917	972	183	198
10 x 6(4)	603	603	619	625	629	---	---	---	183	---
12 x 6	737	775(2)	791	819(2)	822	---	---	---	254	---
10 x 8	673	708(2)	724	752(2)	756	---	---	---	275	---
12 x 8	737	775(2)	791	819(2)	822	902	905	953	356	356
	Inch									
4 x 2	13.88	14.50(2)	15.12	15.50(2)	15.62	---	---	---	4.25	---
6 x 4	17.75	18.62(2)	19.25	20.00(2)	20.12	---	---	---	5.31	---
8 x 4	21.38	22.38(2)	23.00	24.00(2)	24.12	---	---	---	6.94	---
8 x 6	21.38	22.38(2)	23.00	24.00(2)	24.12	36.00(3)	36.12	38.25	7.19	7.81
10 x 6(4)	23.75	23.75	24.38	24.62	24.75	---	---	---	7.19	---
12 x 6	29.00	30.50(2)	31.12	32.25(2)	32.38	---	---	---	10.00	---
10 x 8	26.50	27.88(2)	28.50	29.62(2)	29.75	---	---	---	10.81	---
12 x 8	29.00	30.50(2)	31.12	32.25(2)	32.38	35.50	35.62	37.50	14.00	14.00

1. End connection style abbreviations: RF - Raised Face, RTJ - Ring Type Joint, BW - Buttwelding.
2. Per ISA S75.03.
3. Per ISA S75.16.
4. NPS 10x6 has a valve outlet area identical to the NPS 8x6.

Table 26. Dimensions

VALVE SIZE, DN	A					
	PN, End Connection Style(1)					
	PN 16, RF	PN 25, RF	PN 40, RF	PN 63, RF	PN 100, RF	PN 160, RF
	mm					
100 x 50	---	---	---	430	430	---
150 x 100	480	480	480	550	550	---
200 x 100	600	600	600	650	650	---
200 x 150	---	600	600	650	650	---
300 x 150	850	850	850	900	900	---
250 x 200	---	---	---	---	---	---
300 x 200	---	850	850	900	900	900

1. End connection style abbreviations: RF - Raised Face.

Figure 19. Dimensions (also see tables 25, 26, 27, and 28)

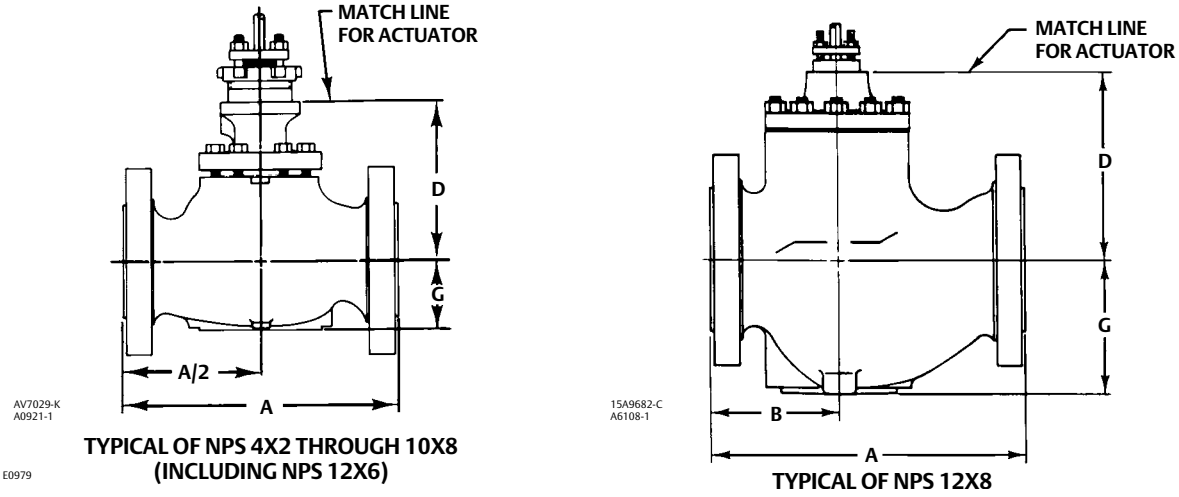

Table 27. Dimensions (Dimension B for 12 x 8 Valve Sizes)

VALVE SIZE, NPS	Class, End Connection Style(1)							
	CL150	CL300		CL600		CL900		
	RF	RF	RTJ	RF, BW	RTJ	RF	RTJ	BW
	mm							
12 x 8	292	311	319	333	335	397	398	422
	Inch							
12 x 8	11.50	12.25	12.56	13.12	13.18	15.63	15.69	16.63

1. End connection style abbreviations: RF - Raised Face, RTJ - Ring Type Joint, BW - Buttwelding.

Table 28. Dimensions (Dimension D for All Valve Sizes)

CAGE STYLE	BONNET	VALVE SIZE, NPS	STEM DIA									
			12.7 mm (1/2 Inch)		19.1 mm (3/4 Inch)				25.4 mm (1 Inch) or 31.8 mm (1-1/4 Inch)			
					CL900 Only		All Except CL900		CL300 and 600		CL900	
			mm	Inch	mm	Inch	mm	Inch	mm	Inch	mm	Inch
All except Cavitrol III or Whisper Trim III	Plain	4 x 2	216	8.50	---	---	213	8.38	---	---	---	---
		6 x 4	257	10.12	---	---	254	10.00	300	11.81	---	---
		8 x 4	259	10.19	---	---	256	10.06	302	11.88	---	---
		8 x6, 10 x 6(3)	287	11.31	409	16.12	287	11.31	332	13.06	464	18.25
		12 x 6	356	14.00	---	---	356	14.00	400	15.75	---	---
		10 x 8	---	---	---	---	375	14.75	---	---	---	---
		12 x 8	---	---	584	23.00	411	16.19	---	---	608	23.94
	Style 1 Extension	4 x 2	318	12.50	---	---	322	12.69	---	---	---	---
		6 x 4	359	14.12	---	---	363	14.31	432	17.00	---	---
		8 x 4	360	14.19	---	---	365	14.38	433	17.06	---	---
		8 x6, 10 x 6(3)	---	---	---	---	394	15.50	464	18.25	---	---
		12 x 6	---	---	---	---	462	18.19	532	20.94	---	---
		10 x 8	---	---	---	---	421	16.56	449	17.69	---	---
		12 x 8	---	---	---	---	457	18.00	486	19.12	---	---
	Style 2 Extension	4 x 2	516	20.31	---	---	513	20.19	---	---	---	---
		6 x 4	562	22.12	---	---	554	21.81	595	23.44	---	---
		8 x 4	564	22.19	---	---	556	21.88	597	23.50	---	---
		8 x6, 10 x 6(3)	---	---	---	---	579	22.81	---	---	---	---
		10 x 8	---	---	---	---	621	24.44	---	---	---	---
		12 x 6	---	---	---	---	648	25.50	---	---	---	---
		12 x 8	---	---	---	---	---	---	---	---	---	---
	ENVIRO-SEAL bellows seal bonnet	4 x 2	435	17.12	---	---	---	---	---	---	---	---
		6 x 4	576	22.69	---	---	576	22.69	---	---	---	---
		8 x 4	578	22.75	---	---	578	22.75	---	---	---	---
		10 x 8	---	---	---	---	703	27.69	---	---	---	---
		8 x6, 10 x 6(3)	---	---	---	---	608	23.94	---	---	---	---
		12 x 6	---	---	---	---	676	26.62	---	---	---	---
		12 x 8	---	---	---	---	---	---	---	---	---	---
Cavitrol III	Plain	4 x 2	252	9.94	---	---	249	9.81	---	---	---	---
		6 x 4	346	13.62	---	---	343	13.50	389	15.31	---	---
		8 x 4	348	13.69	---	---	344	13.56	---	---	---	---
		8 x6, 10 x 6(3)	403	15.88	---	---	403	15.88	---	---	---	---
		10 x 8(1)	---	---	---	---	375	14.75	425	16.75	---	---
		10 x 8(2)	---	---	---	---	511	20.12	560	22.06	---	---
		12 x 6	480	18.88	---	---	480	18.88	---	---	---	---
		12 x 8	---	---	---	---	---	---	---	---	---	---
Whisper Trim III	Plain	4 x 2	4 x 2	216	8.50	---	---	213	8.38	---	---	---
		6 x 4	6 x 4	257	10.12	---	---	254	10.00	300	11.81	---
		8 x 4	8 x 4	259	10.19	---	---	256	10.06	302	11.88	---
		8 x6, 10 x 6(3)	287	11.31	409	16.12	399	15.69	443	17.44	464	18.25
		12 x 6	356	14.00	---	---	503	19.81	548	21.56	---	---
		10 x8	---	---	---	---	504	19.83	---	---	---	---
		12 x 8	---	---	---	---	---	---	---	---	---	---

1. One-stage trim.
2. Two-stage trim.
3. NPS 10x6 has a valve outlet area identical to the NPS 8x6.

Neither Emerson, Emerson Automation Solutions, nor any of their affiliated entities assumes responsibility for the selection, use or maintenance of any product. Responsibility for proper selection, use, and maintenance of any product remains solely with the purchaser and end user.

Fisher, easy-e,Cavitrol, Whisper Trim, ENVIRO-SEAL, and WhisperFlo are marks owned by one of the companies in the Emerson Automation Solutions business unit of Emerson Electric Co. Emerson Automation Solutions, Emerson, and the Emerson logo are trademarks and service marks of Emerson Electric Co. All other marks are the property of their respective owners.

The contents of this publication are presented for informational purposes only, and while every effort has been made to ensure their accuracy, they are not to be construed as warranties or guarantees, express or implied, regarding the products or services described herein or their use or applicability. All sales are governed by our terms and conditions, which are available upon request. We reserve the right to modify or improve the designs or specifications of such products at any time without notice.

Emerson Automation Solutions
Marshalltown, Iowa 50158 USA
Sorocaba, 18087 Brazil
Cernay, 68700 France
Dubai, United Arab Emirates
Singapore 128461 Singapore

www.Fisher.com

© 1973, 2017 Fisher Controls International LLC. All rights reserved.