Fisher™ Control-Disk™ Rotary Valve

The Fisher Control-Disk rotary valve offers excellent throttling performance. An equal percentage flow characteristic provides an improved throttling range comparable to that of a segmented ball valve. This improved capability allows you to control closer to the target set point, regardless of process disturbances, which results in a reduction in process variability.

The valve body meets PN 10 through PN 40, CL150, and CL300 ratings. Face-to-face dimensions meet EN 558, API 609, and MSS-SP68 standards. Line centering clips provide for versatility to mount and align the same wafer style valve body in different piping configurations (ASME and EN ratings).

The Control-Disk rotary valve features an eccentrically-mounted disk with either soft or metal seal, providing capability for enhanced shutoff. The interchangeable sealing technology allows for the same valve body to accept both soft and metal seals.

W9418-2

LUGGED STYLE
(NPS 3 through NPS 12)

W9425-2

WAFER STYLE
(Limited sizes and pressure class)

Control-Disk Valve Features

- Equal percentage flow characteristic— An equal percentage flow characteristic provides an improved throttling range comparable to that of a segmented ball valve. This improved capability allows you to control closer to the target set point, regardless of process disturbances, which results in a reduction in process variability.
- Global Standards— The valve meets API, ASME, and EN standards, making it suitable for use in all world areas.
- PEEK/PTFE bearing as standard— The PTFE-lined PEEK bearing is a low friction, low wear bearing. It allows the valve to operate under high pressure drops for a high cycle life while maintaining low torque. The “drop-in” bearing design enables fast, easy maintenance.
- Lower Operating Torques— The equal percentage disk reduces operating torque at peak angles of disk opening.
- Spline-ended Shaft— The splined shaft with clamped lever and single-pivot linkage reduces lost motion between the actuator and the valve shaft.

- **Improved shaft-disk pinning—** The improved expansion pin system ensures there is a positive, durable connection between disk and shaft. This connection reduces backlash and wear in the drive system, optimizing long-term performance. It also makes disassembly for maintenance quick and simple with no need for special tools.

- **New Spring-Loaded Shaft—** The spring in the outboard shaft provides support to the drive train and disk, enabling the shaft to be installed in both horizontal and vertical orientations with no detriment to performance or cycle life. This complements the ability to mount the actuator on the left- or right-hand side, enabling access for any installation.

- **Excellent Emissions Capabilities—** The optional ENVIRO-SEAL™ packing systems, are designed with very smooth shaft surfaces and live-loading to provide improved sealing, guiding, and loading force transmission. The seal of the ENVIRO-SEAL system can control emissions to below 100 ppm (parts per million).

- **Sour Service Capability—** Trim and bolting materials are available for applications involving sour liquids and gases. These constructions comply with NACE MR0175-2002, MR0103, and MR0175 / ISO 15156.

- **Field-Reversible Valve Action—** The actuator/valve assembly action can be converted from push-down-to-open to push-down-to-close, or vice versa, without additional parts.

- **Easy Installation—** Line-centering clips engage the line flange bolts to simplify installation and provide for centering of wafer-style valves in the pipeline. End connections are compatible with EN and ASME standards.

- **Excellent Shutoff—** Both the metal and soft seal rings have pressure-assisting sealing action that ensures tight shutoff regardless of pressure drop.

- **Long Seal Life—** The opening and closing path of the eccentric disk minimizes disk contact with the seal ring, thereby reducing seal wear, undue friction, and seating torque requirements. See figure 2.

- **Reliable Flange Gasketing Surface—** The seal retainer screws and retention clips are outside the gasket surface of the seal retainer. Spiral-wound or flat-sheet gaskets can be installed between the uninterrupted seal retainer face and the pipeline flange.

- **Integral Shaft-to-Valve Body Bonding—** Standard valve construction includes conductive packing to provide electrical bonding for hazardous area applications.

- **Powder paint as standard—** The Emerson Process Management™ powder paint finish offers an excellent corrosion-resistant finish to all steel parts.

- **High Temperature Capability—** The valve will operate at elevated temperatures, with the appropriate trim components.

- **Shaft Retention—** Redundant shaft retention provides added protection. The packing follower, anti-blowout ring, and shaft groove interact to hold the shaft securely in the valve body (see figure 1).

- **Travel Indication—** Additional travel indication can be achieved by using the indication line on the shaft, along with the disk position markings on the packing follower (see figure 4).

Table of Contents

Control-Disk Valve Features 1
Control-Disk Valve Specifications and Materials of Construction 3

Control-Disk Valve Specifications and Materials of Construction

Table 1. Fisher Control-Disk Valve Specifications

Specifications		EN	ASME
Valve Body Size		DN 50, 80, 100, 150, 200, 250, and 300	NPS 2, 3, 4, 6, 8, 10, and 12
Pressure Rating		PN 10 to 40 per EN 12516-1	CL150 / 300 per ASME B16.34 (CL150-600 for NPS 2)
Valve Body Materials		EN 1.0619 steel	WCC steel
		EN 1.4409 stainless steel	CF3M (316L) stainless steel
		LCC	LCC
		CW2M(1)	CW2M(1)
		M35-2(2)	M35-2
Disk Materials	PTFE or RPTFE(4) Seal	EN 1.4409 stainless steel	CF3M stainless steel
		CW2M	CW2M
		M35-2	M35-2
	Metal or UHMWPE(3) Seal	Chrome-plated EN 1.4409 Stainless Steel	Chrome-plated CF3M Stainless Steel
End Connections		Mates with raised-face flanges per EN 1092-1	Mates with raised-face flanges per ASME B16.5
Valve Body Style		Wafer (flangeless) and single flange with tapped or through holes, Double Flange available upon request	
Face-to-Face Dimensions		Meets MSS SP68, API 609, and EN 558 standards	
Shutoff		PTFE, RPTFE, or UHMWPE seal ring - Class VI per ANSI/FCI 70-2 and IEC 60534-4	
		S31600 (316 SST) seal ring - Class IV per ANSI/FCI 70-2 and IEC 60534-4	
Flow Coefficients		See Fisher Catalog 12	
Flow Direction		Standard (forward flow) is with the seal retainer facing upstream; reverse flow is permissible for soft seals only	
Flow Characteristic		Equal percentage	
Disk Rotation		Counterclockwise to open (when viewed from actuator side of valve body) through 90 degrees of disk rotation	
Shaft Diameters and Approximate Weights		See table 7	

1. This material is not listed in EN 12516-1 or ASME B16.34. See figure 6 for pressure/temperature ratings.
2. This material is not listed in EN 12516-1. See figure 6 for pressure/temperature ratings.
3. UHMWPE stands for ultra high molecular weight polyethylene.
4. RPTFE is a reinforced PTFE seal.

Table 2. Materials (Other Valve Components)

Component	Material
Shafts and Pins	S17400 (17-4PH) stainless steel, S20910 (XM-19) stainless steel, N10276, N05500
Anti-blowout Ring	N07718
Seal	PTFE, RPTFE, or UHMWPE with S31600 (316 stainless steel) or R30003 spring. Metal seal is 316 stainless steel with graphite gaskets
Bearings	PEEK/PTFE, R30006 (Alloy 6), S31600 Nitride
Packing	PTFE/carbon-filled PTFE (standard), graphite die-molded ribbon, ENVIRO-SEAL PTFE packing, ENVIRO-SEAL graphite packing
Follower Spring	N07718 with carbon-filled PEEK or S31600 spring seats
Bolting	B8M Class 2, B7M, N05500, N07718
Nuts	8M, 2HM, N04400, N10276

Table 3. Trim Combinations with Standard Construction Materials

Valve Body Material	Shaft Material	Disk Material	Bearings	Seal Material
1.0619 & WCC	S17400 H1075	1.4409 & CF3M	PEEK/PTFE	PTFE or RPTFE
		1.4409 & CF3M Chrome-Plated	PEEK/PTFE	UHMWPE or Metal
			Alloy 6 or S31600 Nitride	Metal
LCC	S17400 H1075	1.4409 & CF3M	PEEK/PTFE	PTFE
1.4409 & CF3M	S20910	1.4409 & CF3M	PEEK/PTFE	PTFE or RPTFE
		1.4409 & CF3M Chrome-Plated	PEEK/PTFE	UHMWPE or Metal
			Alloy 6 or S31600 Nitride	Metal
CW2M	N10276	CW2M	PEEK/PTFE	PTFE or RPTFE
M35-2	N05500	M35-2	PEEK/PTFE	PTFE or RPTFE

Figure 1. Typical Fisher Control-Disk Valve Construction Detail

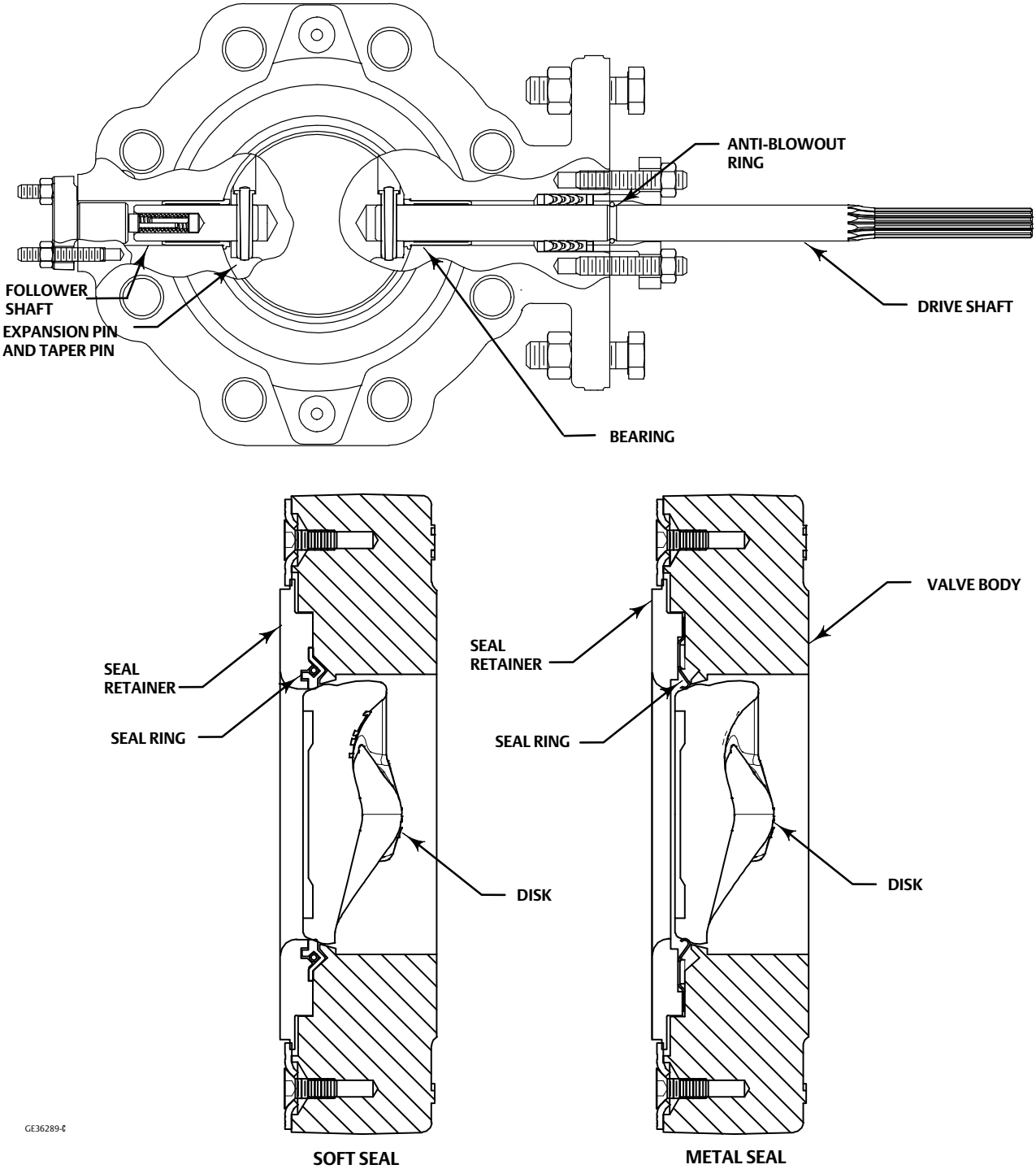

Note: Split shaft construction shown.

Figure 2. Comparison of Disk Action

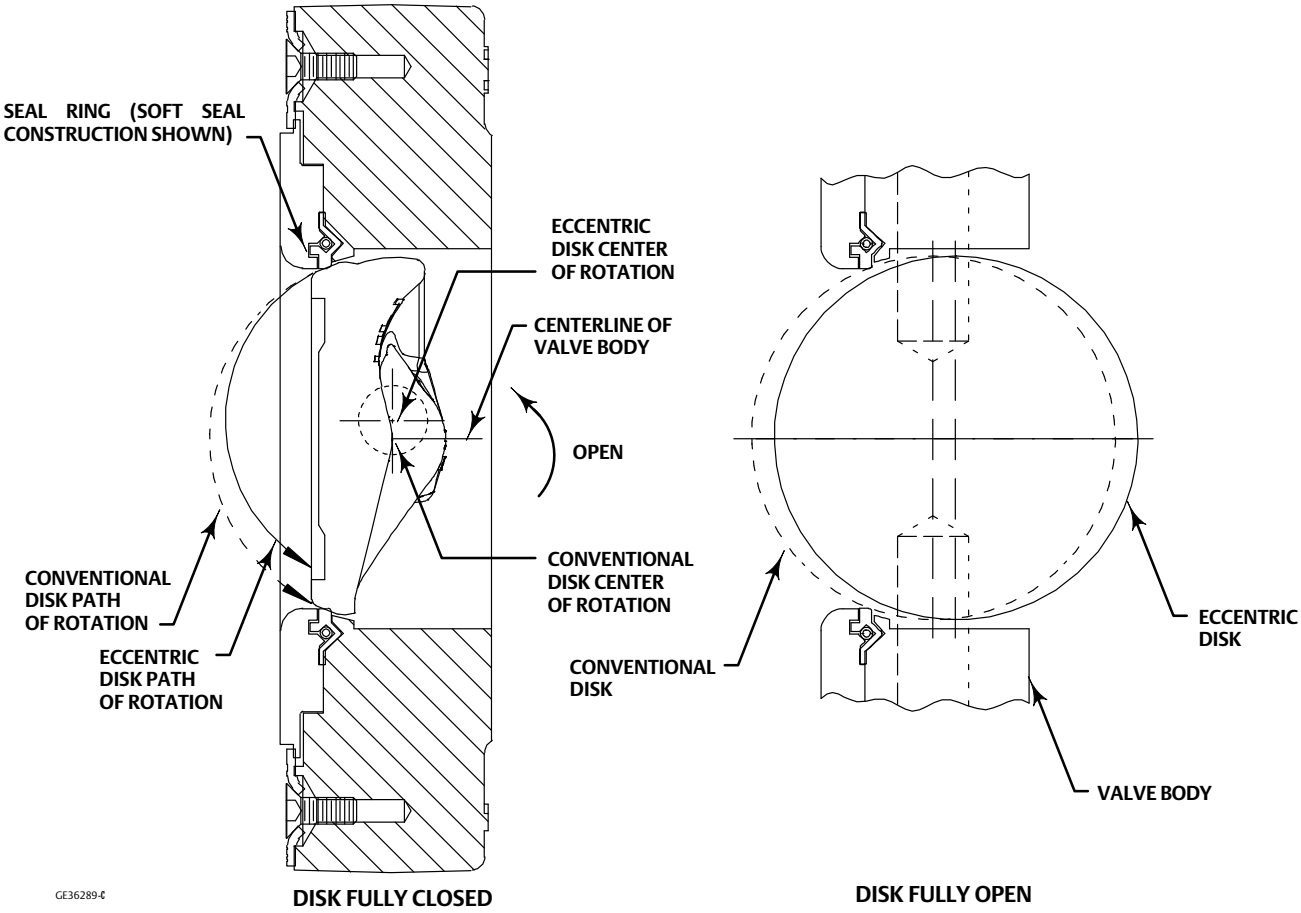

Note: Split shaft construction shown.

Figure 3. Available Seal Configuration

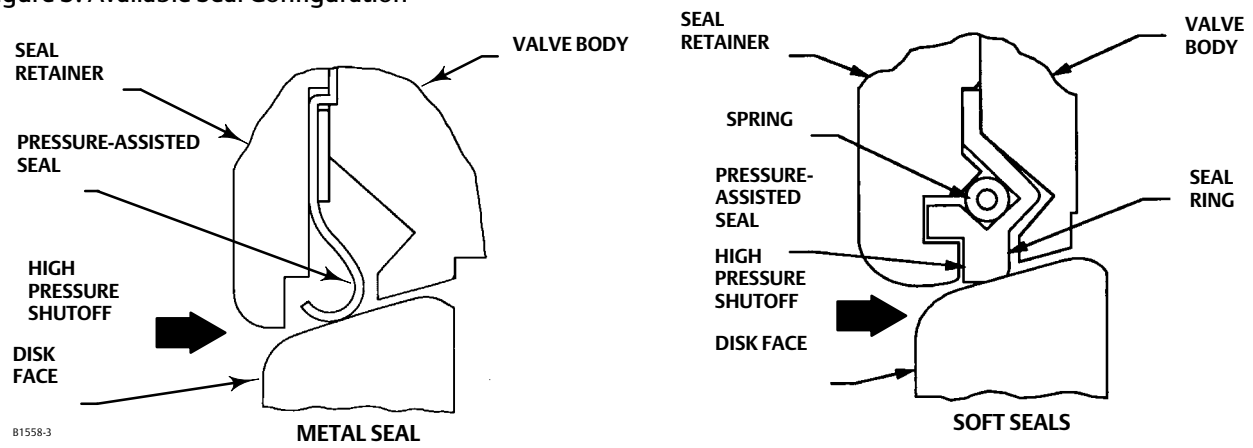

Figure 4. Travel Indication

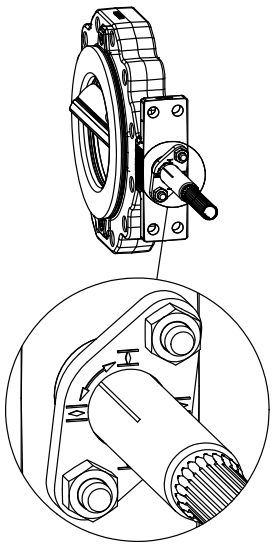

Table 4. Material Temperature Capabilities

MATERIAL					TEMPERATURE LIMITS	
PN FLANGES						
Valve Body	**Shaft**	**Bearing Lining and Jacket**	**Seal**	**Packing**	**°C**	**°F**
1.0619 Steel	S17400 or S20910	PEEK / PTFE	PTFE or RPTFE	PTFE or Graphite	–10 to 232	14 to 450
			UHMWPE	PTFE or Graphite	–10 to 93	14 to 200
			Metal or Flow Ring	PTFE	–10 to 232	14 to 450
				Graphite	–10 to 260	14 to 500
		R30006 (Alloy 6) or S31600 Nitride	Metal or Flow Ring	Graphite	–10 to 400	14 to 752
LCC	S17400 or S20910	PEEK / PTFE	PTFE	PTFE	–46 to 232	–50 to 450
1.4409 Stainless Steel	S20910	PEEK / PTFE	PTFE or RPTFE	PTFE or Graphite	–46 to 232	-50 to 450
			UHMWPE	PTFE or Graphite	–18 to 93	0 to 200
			Metal or Flow Ring	PTFE	–46 to 232	-50 to 450
				Graphite	–46 to 260	-50 to 500
		R30006 (Alloy 6) or S31600 Nitride	Metal or Flow Ring	Graphite	–46 to 500(1)	-50 to 932(1)
CW2M	N10276	PEEK / PTFE	PTFE or RPTFE	PTFE	–10 to 232	14 to 450
M35-2	N05500	PEEK / PTFE	PTFE or RPTFE	PTFE	–10 to 232	14 to 450
ASME FLANGES						
Valve Body	**Shaft**	**Bearing Lining and Jacket**	**Seal**	**Packing**	**°C**	**°F**
WCC steel	S17400 or S20910	PEEK / PTFE	PTFE or RPTFE	PTFE or Graphite	–29 to 232	-20 to 450
			UHMWPE	PTFE or Graphite	–18 to 93	0 to 200
			Metal or Flow Ring	PTFE	–29 to 232	-20 to 450
				Graphite	–29 to 260	-20 to 500
		R30006 (Alloy 6) or S31600 Nitride	Metal or Flow Ring	Graphite	–29 to 427	-20 to 800
LCC	S17400 or S20910	PEEK / PTFE	PTFE	PTFE	–46 to 232	–50 to 450
CF3M Stainless Steel	S20910	PEEK / PTFE	PTFE or RPTFE	PTFE or Graphite	–46 to 232	–50 to 450
			UHMWPE	PTFE or Graphite	–18 to 93	0 to 200
			Metal or Flow Ring	PTFE	–46 to 232	–50 to 450
				Graphite	–46 to 260	–50 to 500
		R30006 (Alloy 6) or S31600 Nitride	Metal or Flow Ring	Graphite	–46 to 454(1)	–50 to 850(1)
CW2M	N10276	PEEK / PTFE	PTFE or RPTFE	PTFE	–46 to 232	–50 to 450
M35-2	N05500	PEEK / PTFE	PTFE or RPTFE	PTFE	–46 to 232	–50 to 450

1. For applications exceeding 427°C (800°F), consult your Emerson Process Management sales office. for appropriate high temperature disk edge coating.

Figure 5. Material Pressure/Temperature Curves

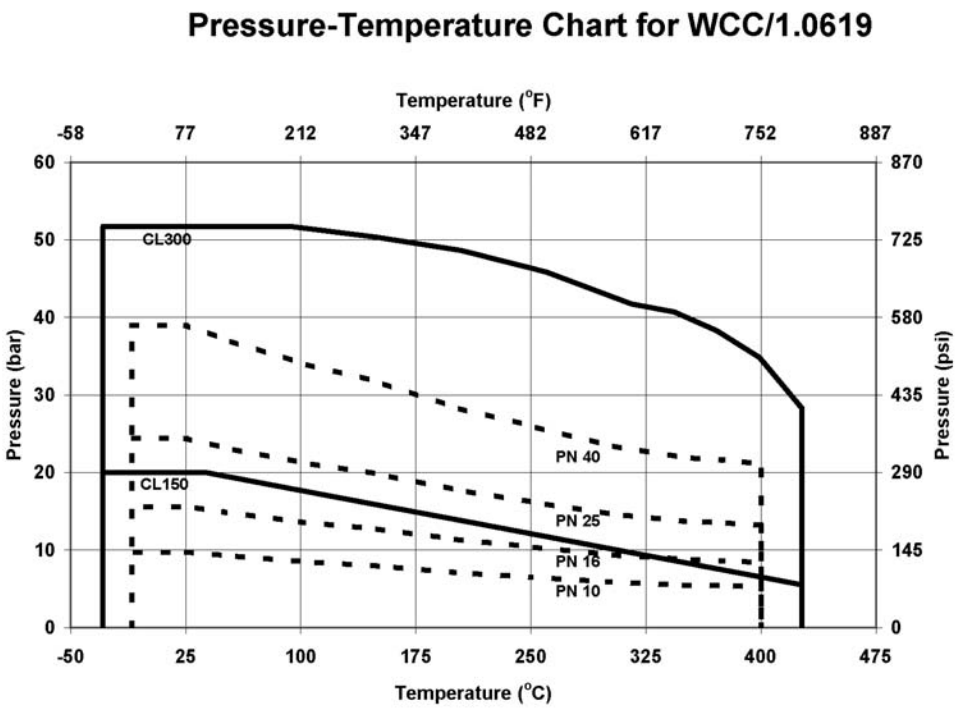

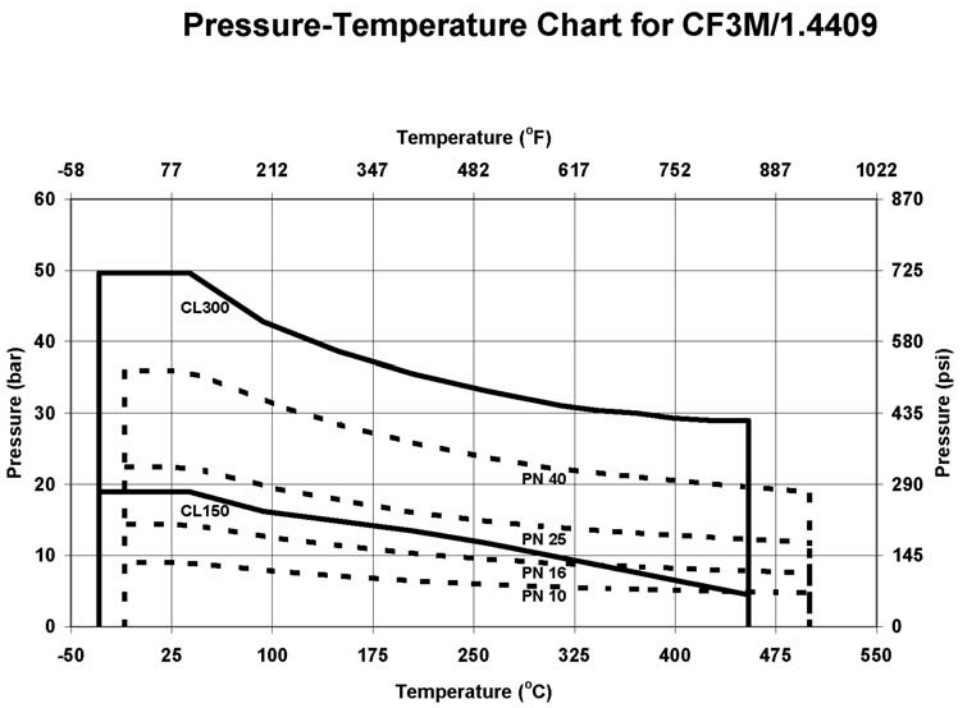

Figure 6. Material Pressure/Temperature Curves

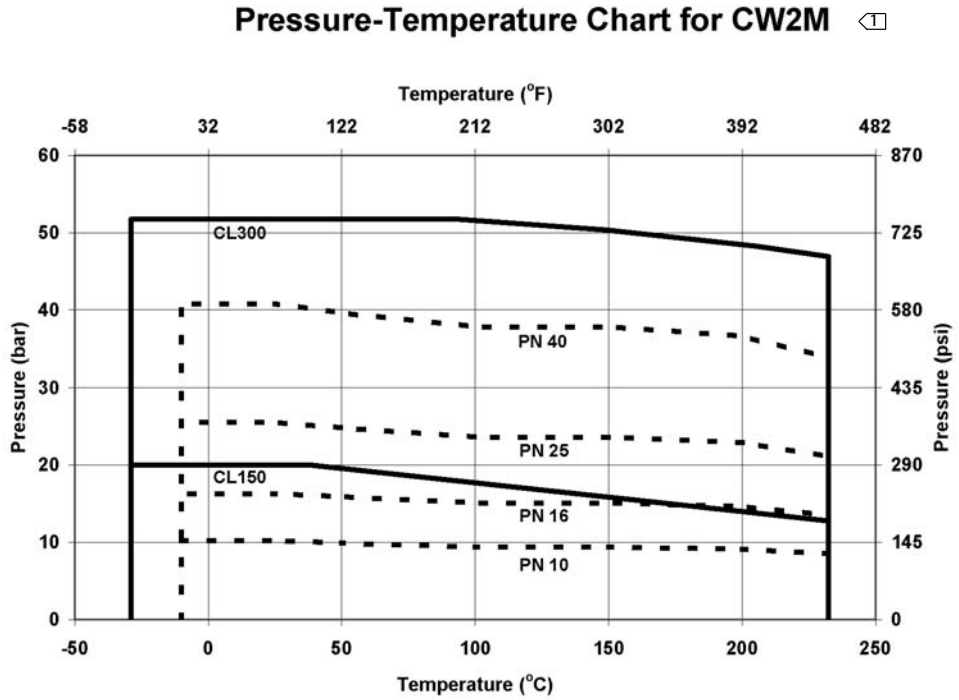

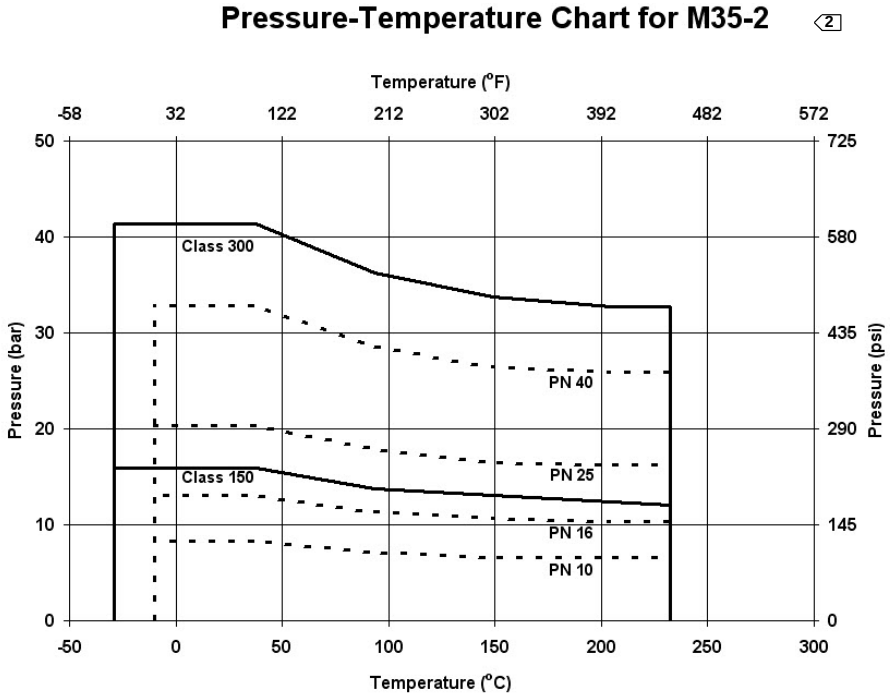

Note:
1 CW2M is not listed in EN 12516-1 or ASME B16.34. The PN and CL designations are used only to indicate relative pressure-retaining capabilities.
2 M35-2 is not listed in EN 12516-1. The PN designations are used only to indicate relative pressure-retaining capabilities.

Figure 7. Material Pressure/Temperature Curves

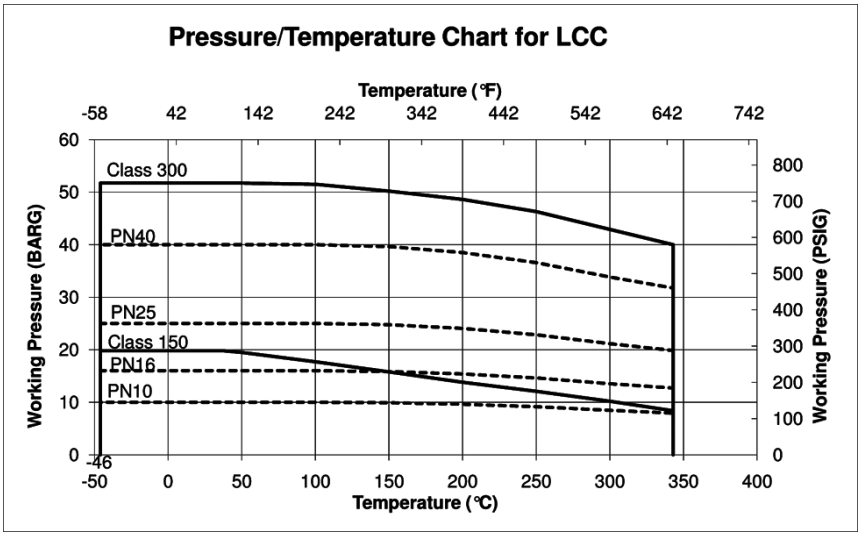

E1140

Table 5. Maximum Allowable Shutoff Pressure Drops based on Trim (Seal, Shaft, and Bearings), Bar

Note: Do not exceed the EN or ASME pressure/temperature rating of the valve or mating flanges.

TRIM	TEMPERATURE, °C	DN						
		50	80	100	150	200	250	300
		Bar						
PTFE or RPTFE Seal PEEK/PTFE Bearings	-46 to 65	51.7	51.7	51.7	51.7	51.7	51.7	51.7
	93	48.5	48.5	48.5	48.5	48.5	45.6	46.8
	121	38.6	38.6	38.6	38.6	38.6	38.6	38.6
	149	28.7	28.7	28.7	28.7	28.7	28.7	28.7
	191	13.8	13.8	13.8	13.8	13.8	13.8	13.8
	204	10.3	10.3	10.3	10.3	10.3	10.3	10.3
	232	3.4	3.4	3.4	3.4	3.4	3.4	3.4
UHMWPE Seal PEEK/PTFE Bearings	-17 to 37	51.7	51.7	51.7	51.7	51.7	51.7	51.7
	66	38.6	38.6	38.6	38.6	38.6	38.6	38.6
	93	25.9	25.9	25.9	25.9	25.9	25.9	25.9
Metal Seal(1) Alloy 6 Bearings	-46 to 37	18.5	16.5	13.9	12.8	11.0	6.8	7.0
	93	17.0	15.1	12.8	11.7	10.1	6.3	6.5
	149	16.0	14.2	12.0	11.0	9.4	5.9	6.1
	204	15.1	13.4	11.4	10.4	9.0	5.6	5.7
	260	14.3	12.8	10.8	9.9	8.5	5.3	5.4
	316	13.8	12.3	10.3	9.5	8.2	5.1	5.2
	371	13.2	11.9	10.0	9.2	7.9	5.0	5.0
	427	12.5	11.6	9.8	9.0	7.7	4.8	5.0
	454	12.1	11.5	9.7	8.9	7.7	4.8	4.9
Metal Seal(1) S31600/Nitride Bearings	-46 to 37	19.5	28.2	26.1	20.8	31.0	15.5	8.0
	93	19.3	28.0	26.0	20.6	31.0	15.4	7.9
	149	17.0	25.4	23.7	18.7	28.8	14.0	7.1
	204	15.9	24.3	22.7	17.8	26.3	13.3	6.8
	260	14.5	22.9	21.4	16.8	24.6	12.5	6.3
	316	13.8	22.1	20.8	16.2	23.2	12.1	6.1
	371	13.2	21.5	20.2	15.7	22.4	11.8	5.9
	427	12.5	20.7	19.5	15.2	21.8	11.4	5.6
	454	12.1	20.3	19.2	14.9	21.6	11.2	5.4
Metal Seal(1) PEEK/PTFE Bearings	-46 to 37	51.7	51.7	51.7	51.7	31.0	17.2	17.2
	93	51.7	51.7	51.7	51.7	31.0	17.2	17.2
	149	50.3	50.3	50.3	50.3	31.0	17.2	17.2
	204	48.6	48.6	48.6	48.2	31.0	17.2	17.2
	232	47.2	47.2	46.3	42.6	31.0	17.2	17.2
	260	24.7	21.9	18.5	17.0	14.6	9.1	9.4
Flow Ring PEEK/PTFE Bearings	-46 to 37	51.7	51.7	51.7	51.7	51.7	45.5	46.8
	93	51.7	51.7	51.7	51.7	51.7	37.7	38.8
	149	50.3	50.3	50.3	50.3	50.3	31.7	32.6
	204	48.6	48.6	48.6	48.1	41.3	25.7	26.4
	232	47.2	47.2	46.3	42.6	36.6	22.8	23.4
	260	24.6	21.9	18.5	17	14.6	9.1	9.3
Flow Ring S31600/Nitride Bearings	-46 to 37	32	34.4	34.8	28.6	31.6	20.2	13
	93	31.8	34.4	34.6	28.5	31.6	19.7	12.9
	149	29.5	34.4	32.4	26.6	28.7	17.9	12.1
	204	28.5	34.4	31.3	25.7	26.3	16.4	11.7
	260	27.3	37.5	30.1	24.8	24.6	15.3	11.3
	316	26.6	35.5	29.5	24.2	23.2	14.4	11.1
	371	26.1	34.1	28.7	23.7	22.4	13.9	10.8
	427	25.4	28.9	27.9	23.2	21.7	13.5	10.6
	454	25	28.9	27.6	22.9	21.5	13.3	10.5

1. Pressure drops shown for metal seals are for forward flow only.

Table 6. Maximum Allowable Shutoff Pressure Drops based on Trim (Seal, Shaft, and Bearings), Psi

Note: Do not exceed the EN or ASME pressure/temperature rating of the valve or mating flanges.

TRIM	TEMPERATURE, °F	NPS						
		2	3	4	6	8	10	12
		Psi						
PTFE or RPTFE Seal PEEK/PTFE Bearings	-50 to 150	750	750	750	750	750	750	750
	200	704	704	704	704	704	662	679
	250	560	560	560	560	560	560	560
	300	416	416	416	416	416	416	416
	375	200	200	200	200	200	200	200
	400	150	150	150	150	150	150	150
	450	50	50	50	50	50	50	50
UHMWPE Seal PEEK/PTFE Bearings	0 to 100	750	750	750	750	750	750	750
	150	560	560	560	560	560	560	560
	200	375	375	375	375	375	375	375
Metal Seal(1) Alloy 6 Bearings	-50 to 100	268	239	202	185	159	99	102
	200	246	219	185	170	146	91	94
	300	232	206	174	160	137	86	88
	400	219	195	165	151	130	81	83
	500	208	186	157	144	124	77	79
	600	200	178	150	138	119	74	76
	700	192	172	145	134	115	72	73
	800	181	168	142	130	112	70	72
	850	176	167	141	129	111	69	71
Metal Seal(1) S31600/Nitride Bearings	-50 to 100	283	409	379	301	450	225	116
	200	280	406	377	299	450	223	115
	300	246	369	344	271	417	203	103
	400	230	352	329	258	382	193	98
	500	211	332	311	243	357	182	91
	600	200	321	301	235	337	176	88
	700	192	312	293	228	325	171	85
	800	181	300	283	220	316	165	81
	850	176	295	278	216	313	162	79
Metal Seal(1) PEEK/PTFE Bearings	-50 to 100	750	750	750	750	450	250	250
	200	750	750	750	750	450	250	250
	300	730	730	730	730	450	250	250
	400	705	705	705	699	450	250	250
	450	685	685	672	618	450	250	250
	500	358	318	269	247	212	132	136
Flow Ring PEEK/PTFE Bearings	-50 to 150	750	750	750	750	750	661	679
	200	750	750	750	750	750	548	563
	300	730	730	730	730	730	461	474
	400	705	705	705	699	600	374	384
	450	685	685	672	618	531	331	340
	500	358	318	269	247	212	132	136
Flow Ring S31600/Nitride Bearings	-50 to 150	465	499	505	416	459	293	189
	200	462	499	502	414	459	287	188
	300	429	499	470	387	417	260	176
	400	414	499	455	374	382	238	171
	500	397	545	438	360	357	222	165
	600	387	515	428	351	337	210	161
	700	379	496	417	345	325	202	158
	800	369	420	405	337	316	196	155
	850	364	420	401	333	313	194	153

1. Pressure drops shown for metal seals are for forward flow only.

Table 7. Dimensions and Weights

VALVE SIZE, PRESSURE RATING		A	E	F		G		K	R(4)	S(1)	T	U	W	APPROXIMATE WEIGHT(2)	
				Wafer	Lugged	Wafer	Lugged							Wafer	Lugged
		mm												kg	
DN50/ NPS 2	PN10-40/ CL150-300	43	187.5	150	---	109	---	125	102	12.7	117	---	14	4.7	6.7
DN80/ NPS 3	PN10-40/ CL150-300	47/48 (3)	187.5	---	196	---	133	130	144	15.9	117	---	14	---	11.2
DN100/ NPS 4	PN10-40/ CL150-300	53	214.4	---	226	---	147	172	162	19.1	152	32	14	---	17.6
DN150/ NPS 6	PN10-40/ CL150-300	57	214.4	270	300	147	182	205	218	25.4	152	32	14	15.7	26.5
DN200/ NPS 8	PN10-16/ CL150	61	208	---	342	---	225	258	278	31.8	235	46	18	---	40.9
	PN25-40	61	208	358	364	225	225	258	291	31.8	235	46	18	34.6	46.7
	CL300	73													
DN250/ NPS 10	PN10-16/ CL150	69	208	---	395	---	250	270	331	31.8	235	46	18	---	50.7
	PN25-40	69	208	400	450	265	265	270	352	31.8	235	46	18	52.0	79.4
	CL300	83													
DN300/ NPS 12	PN10-16/ CL150	78	208	---	467	---	309	304	381	38.1	235	46	18	---	98.6
	PN25-40	78	208	---	512	---	309	304	410	38.1	235	46	18	---	104.9
	CL300	92													
		Inches												lbs	
DN50/ NPS 2	PN10-40/ CL150-300	1.69	7.38	5.91	---	4.29	---	4.92	4.02	0.50	4.62	---	0.55	10	15
DN80/ NPS 3	PN10-40/ CL150-300	1.85/ 1.89 (3)	7.38	---	7.72	---	5.24	5.12	5.67	0.63	4.62	---	0.55	---	25
DN100/ NPS 4	PN10-40/ CL150-300	2.09	8.44	---	8.90	---	5.79	6.77	6.38	0.75	6.00	1.25	0.55	---	39
DN150/ NPS 6	PN10-40/ CL150-300	2.24	8.44	10.63	11.81	5.79	7.17	8.07	8.58	1.00	6.00	1.25	0.55	35	58
DN200/ NPS 8	PN10-16/ CL150	2.40	8.19	---	13.46	---	8.86	10.16	10.96	1.25	9.25	1.81	0.71	---	90
	PN25-40	2.40	8.19	14.09	14.33	8.86	8.86	10.16	11.46	1.25	9.25	1.81	0.71	76	103
	CL300	2.87													
DN250/ NPS 10	PN10-16/ CL150	2.72	8.19	---	15.55	---	9.84	10.63	13.03	1.25	9.25	1.81	0.71	---	112
	PN25-40	2.72	8.19	15.75	17.72	10.43	10.43	10.63	13.86	1.25	9.25	1.81	0.71	115	175
	CL300	3.27													
DN300/ NPS 12	PN10-16/ CL150	3.07	8.19	---	18.39	---	12.17	11.97	15.00	1.50	9.25	1.81	0.71	---	217
	PN25-40	3.07	8.19	---	20.16	---	12.17	11.97	16.14	1.50	9.25	1.81	0.71	---	231
	CL300	3.62													

1. This nominal valve shaft diameter is the shaft diameter through the packing box. Use this diameter when selecting Fisher actuators.
2. Valve assembly only.
3. 48 mm for CL150 and CL300 lugged only.
4. Dimension shown is seal retainer OD. Diameter for serrated gasket surface may be smaller.

Table 8. Line Bolting Dimensions

VALVE SIZE	Y					
	Pressure Rating					
	CL150	CL300	PN10	PN16	PN25	PN40
DN80 / NPS 3	4X 5/8-11	8X 3/4-10	8X M16X2			
DN100 / NPS 4	8X 5/8-11	8X 3/4-10	8X M16X2		8X M20X2.5	
DN150 / NPS 6	8X 3/4-10	12X 3/4-10	8X M20X2.5		8X M24X3[1]	
DN200 / NPS 8	8X 3/4-10	12X 7/8-9	8X M20X2.5	12X M20X2.5	12X M24X3	12X M27X3[1]
DN250 / NPS 10	12X 7/8-9	16X 1-8	12X M20X2.5	12X M24X3	12X M27X3	12X M30X3.5[1]
DN300 / NPS 12	12X 7/8-9	16X 1-1/8-8	12X M20X2.5	12X M24X3	16X M27X3	16X M30X3.5

1. Not available in single flange with threaded holes.

Figure 8. Dimensions for Fisher Control-Disk Valve, Single Flange

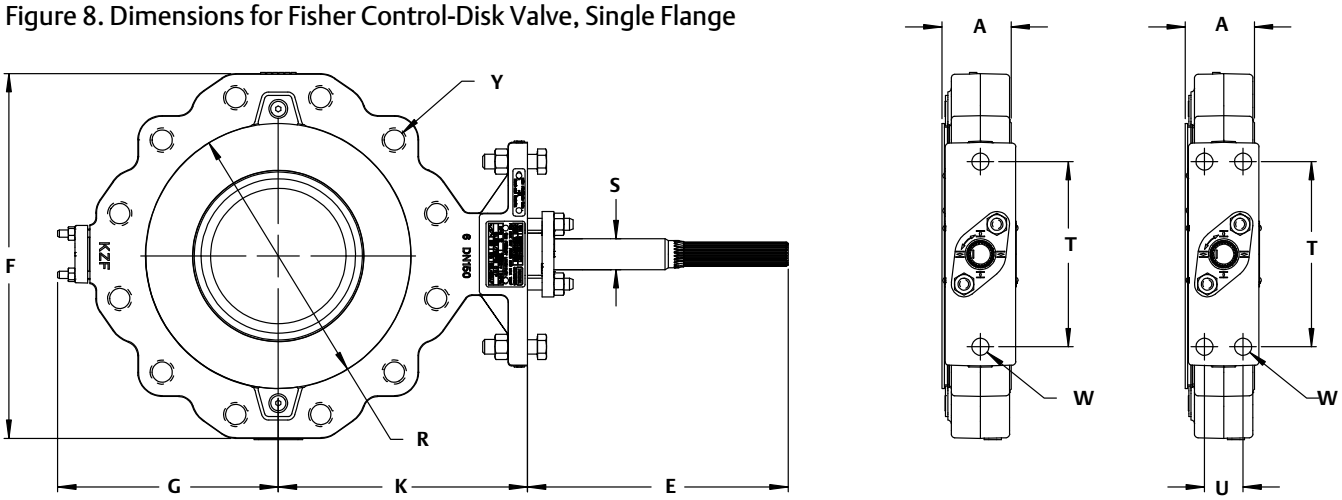

Figure 9. Dimensions for Fisher Control-Disk Valve, Wafer Style (limited sizes)

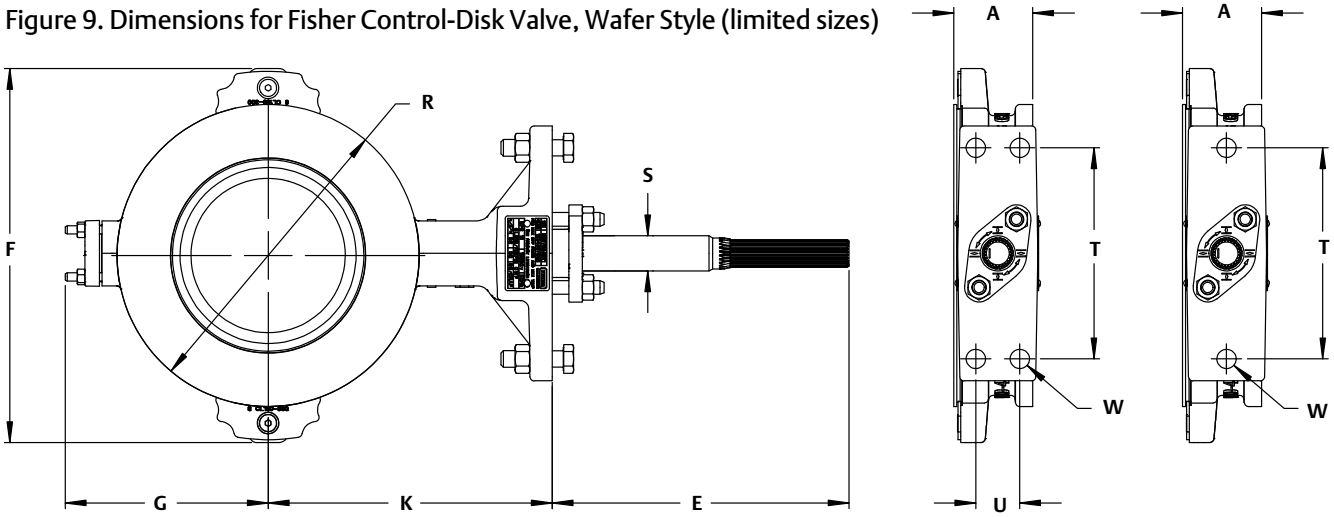

Table 9. Dimensions and Weights, Double Flange Valve Body (See Figure 10)

Valve Size, Pressure Rating		A		B		Approximate Weight	
		mm	inch	mm	inch	kg	lb
DN80/ NPS 3	PN10-16/ CL150	114	4.5	25.3	1.00	17.6	39
	PN25-40/ CL300	180	7.1	25.3	1.00	29.0	64
DN100/ NPS 4	PN10-16/ CL150	127	5.0	28.5	1.12	28.9	64
	PN25-40/ CL300	190	7.5	28.5	1.12	47.8	105
DN150/ NPS 6	PN10-16/ CL150	140	5.5	31.7	1.25	40.2	89
	PN25-40/ CL300	210	8.3	31.7	1.25	76.4	168
NPS200/ NPS 8	PN10-16/ CL150	152	6.0	32.8	1.29	71.3	157
	PN25-40/ CL300	230	9.1	32.8	1.29	124	273
DN250/ NPS 10	PN10-16/ CL150	165	6.5	35.6	1.40	80.0	176
	PN25-40/ CL300	250	9.8	35.6	1.40	203	448
DN300/ NPS 12	PN10-16/ CL150	178	7.0	41.7	1.64	144	317
	PN25-40/ CL300	270	10.6	41.7	1.64	275	606

Figure 10. Dimensions for Fisher Control-Disk Valve Double Flange

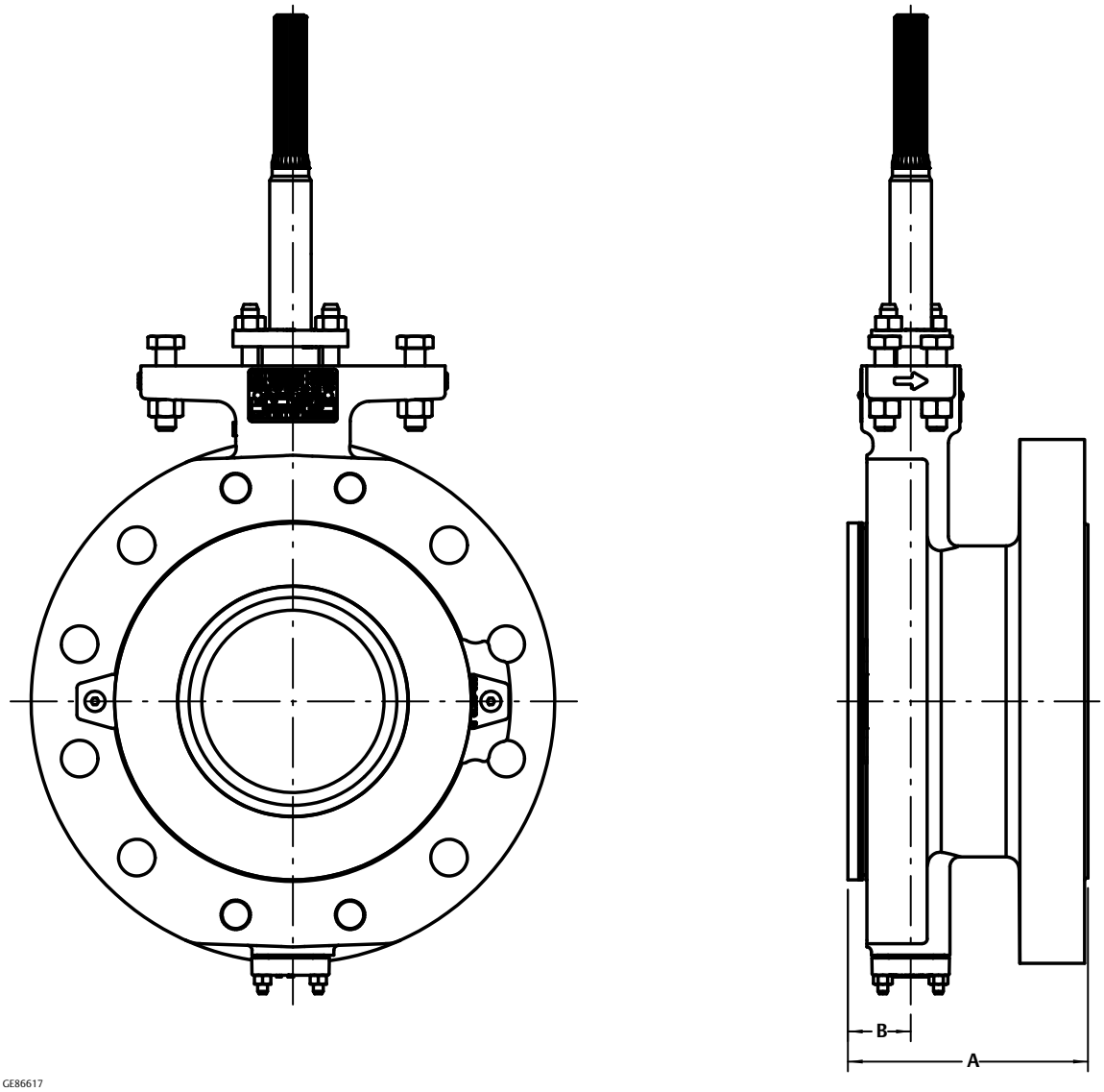

Neither Emerson, Emerson Process Management, nor any of their affiliated entities assumes responsibility for the selection, use or maintenance of any product. Responsibility for proper selection, use, and maintenance of any product remains solely with the purchaser and end user.

Fisher, Control-Disk, and ENVIRO-SEAL are marks owned by one of the companies in the Emerson Process Management business unit of Emerson Electric Co. Emerson Process Management, Emerson, and the Emerson logo are trademarks and service marks of Emerson Electric Co. All other marks are the property of their respective owners.

The contents of this publication are presented for informational purposes only, and while every effort has been made to ensure their accuracy, they are not to be construed as warranties or guarantees, express or implied, regarding the products or services described herein or their use or applicability. All sales are governed by our terms and conditions, which are available upon request. We reserve the right to modify or improve the designs or specifications of such products at any time without notice.

Emerson Process Management
Marshalltown, Iowa 50158 USA
Sorocaba, 18087 Brazil
Cernay, 68700 France
Dubai, United Arab Emirates
Singapore 128461 Singapore

www.Fisher.com

© 2008, 2016 Fisher Controls International LLC. All rights reserved.