Baumann™ Pneumatic Actuators

Contents

Introduction 1
Scope of Manual 1
Design Notes 2
Installation 2
Attaching an Air-to-Retract (ATR) Actuator to a Valve - Part 1 3
Bench Range Adjustment - Air-to-Retract (ATR) Actuator 3
Attaching an Air-to-Retract (ATR) Actuator to a Valve - Part 2 4
Attaching an Air-to-Extend (ATE) Actuator to a Valve - Part 1 4
Bench Range Adjustment - Air-to-Extend (ATE) Actuator 5
Attaching an Air-to-Extend (ATE) Actuator to a Valve - Part 2 5
Spring Replacement, Changing Bench Range 6
Maintenance 6
Field Conversion - ATE to ATR or ATR to ATE 6
Removing the Actuator from the Valve 7
Disassembling the Actuator 8
Reassembling the ATE Actuator 8
Reassembling the ATR Actuator 9
Actuator Maintenance 9
Handwheel Operation 9
Parts Ordering 24

Introduction

The Baumann multiple-spring diaphragm actuators are powerful and compact devices designed to operate control valves, louvers, dampers or mechanical speed adjusting devices. The actuators can provide either direct air-to-extend action (ATE) or reverse air-to-retract action (ATR). When an ATE actuator is installed on a typical Baumann valve, it provides an air-to-close (ATC) or fail-open function. When an ATR actuator is installed, it provides an air-to-open (ATO) or fail-closed function. The design features exceptionally low hysteresis due to the absence of side loads imposed by misalignment of single coiled springs. The use of multiple springs also offers a substantially lower profile.

The units include zinc-plated, epoxy-coated steel diaphragm cases and an epoxy-coated ductile-iron yoke. Stainless steel diaphragm cases, actuator stems, and yokes are available for Baumann size 32 and 54 actuators. The Baumann size 16 actuator comes standard with a stainless steel yoke and epoxy-coated steel diaphragm case. All remaining metal parts are made of either stainless or zinc plated steel for optimum corrosion resistance.

All actuators are suitable for a standard ambient temperature range of -29 to 71°C (-20 to 160°F); for higher temperature service, an optional design is available, consult your Emerson Process Management sales office.

Scope of Manual

This instruction manual includes installation, maintenance, and parts information for Baumann pneumatic actuators.

Do not install, operate, or maintain Baumann actuators without being fully trained and qualified in valve, actuator, and accessory installation, operation, and maintenance. **To avoid personal injury or property damage, it is important to carefully read, understand, and follow all the contents of this manual, including all safety cautions and warnings.** If you have any questions about these instructions, contact your Emerson Process Management sales office before proceeding.

Design Notes

The same basic actuator may be configured in several ways. Variations may produce either a 7.9 mm (5/16 inch), 12.7 mm (1/2 inch), or 19.1 mm (3/4 inch) stroke. The spring tables list the nominal bench spring ranges. Each line in the table lists the high and low limits for the signal air pressure, measured in bar and pounds per square inch (psi). These signal pressures produce the rated stroke lengths when the actuator is not loaded. The signal air connections use 1/4 NPT fittings, and are located in both the lower (key 43) and upper (key 44) diaphragm cases. Use the lower connection for an air-to-retract (ATR) actuator and the upper connection for an air-to-extend (ATE) actuator. The signal air pressure must not exceed 2.4 bar (35 psi). Higher pressures may cause the diaphragm to leak.

Installation

⚠ WARNING

Always wear protective gloves, clothing and eyewear when performing any installation operations to avoid personal injury.

To avoid personal injury or property damage resulting from the bursting of pressure retaining parts, be certain the service conditions do not exceed either the valve body rating or the flange joint rating, or other limits given on the nameplate. Use pressure-relieving or pressure-limiting devices to prevent the service conditions from exceeding these limits.

Check with your process or safety engineer for any additional measures that must be taken to protect against process media.

If installing into an existing application, also refer to the WARNING at the beginning of the Maintenance section on page 6 in this manual.

CAUTION

Often, these types of actuators are attached to valves which include a stainless steel stem and valve seat. When assembling or adjusting the actuators, never turn the valve stem when the plug is touching the valve seat. If the two stainless steel parts rotate while they are touching, they can be damaged very easily.

When adjusting the valve stem (key 5), do not grip the stem directly with pliers or a wrench. This will damage the surface of the stem, and cause damage to the packing in the valve. Instead, counter-tighten the two locknuts (key 27) on the stem together. This will allow you to turn the stem by turning the locknuts with a wrench.

⚠ WARNING

Personal injury or equipment damage caused by sudden release of pressure or bursting of parts may result if the valve assembly is installed where service conditions could exceed the limits given in the product literature, the limits on the appropriate nameplates, or the mating pipe flange rating. Use pressure-relieving devices as required by government or accepted industry codes and good engineering practices. If you cannot determine the ratings and limits for this product, contact your Emerson Process Management sales office before proceeding.

Personal injury could result from packing leakage. The packing might require some readjustment to meet specific service conditions.

If you move or work on an actuator installed on a valve with loading pressure applied, keep your hands and tools away from the stem travel path to avoid personal injury. Be especially careful when removing the stem connector to release all loading on the actuator stem whether it be from air pressure on the diaphragm or compression in the actuator springs.

Likewise take similar care when adjusting or removing any optional travel stop. Refer to the relevant actuator Maintenance Instructions.

If hoisting the valve, take care to prevent people from being injured in case the hoist or rigging slips. Be sure to use adequate sized hoists and chains or slings to handle the valve.

Attaching an Air-to-Retract (ATR) Actuator to a Valve - Part 1

Follow these instructions when assembling the actuator to a valve or other device which provides a positive stop in one direction.

1. Before starting, identify and locate these parts on the valve assembly, figure 1: stem locknuts (key 27), travel indicator (key 58), bonnet (key 8), yoke drive nut (key 9), and plug and stem assembly (keys 4 and 5). Refer to the assembly instructions for the appropriate Baumann control valve.
2. Place the valve body (key 1) in a vise. Clamp the flat end faces of the valve. **DO NOT CLAMP THE SIDES OF THE VALVE.** This may distort the shape of the casting, and ruin the valve.
3. Begin to attach the actuator to the valve body, figures 1 and 2 through figure 14, depending on actuator type. The yoke drive nut (key 9) and travel indicator (key 58) must be removed from the valve body assembly. The hole at the bottom of the actuator yoke (key 17) should fit over the top of the valve stem (key 5). Tilt the top of the actuator back at an angle so you can access the top of the valve stem (key 5).
4. Position the drive nut (key 9) over the valve stem (key 5) with the flat side facing up. (The rounded side should face down, toward the top surface of the yoke.)
5. Thread the two locknuts (key 27) onto the valve stem (key 5). Turn both nuts down as far as possible. Lock nuts together using two wrenches to counter-tighten them. By turning the locked nuts with a wrench, you can turn the valve stem without damaging the surface of the stem.
6. Place the travel indicator (key 58) over the valve stem (key 5).
7. If applicable, loosen shaft collar (key 25), figure 6, and turn clockwise until it reaches the bottom of the actuator stem (key 26).
8. Apply anti-seize compound to the first few threads of the valve stem (key 5). Turn the actuator counterclockwise to locate the first thread on the stem. Thread stem into the actuator a half turn.
9. Apply 1 bar (15 psi) to the signal air port in the lower diaphragm case (key 43). The bottom of the yoke will drop down and touch the top of the valve bonnet (key 8).
10. By hand, tighten the drive nut (key 9).
11. Using a wrench on the counter-tightened nuts (key 27), turn the stem (key 5) up until you feel a resistance.
12. Using a hammer and punch, tighten the drive nut (key 9).
13. Next, make the bench range adjustment. See the next section.

Bench Range Adjustment Air-to-Retract (ATR) Actuator

This adjustment sets the valve so that it opens and closes at the correct signal air pressures. On an air-to-retract actuator, when the pressure reaches the low end of the range, the valve should just begin to open. Once the bench range has been set correctly, the valve should be completely open when it receives full signal air pressure, and the valve travel should also be correct. The spring tables list the possible pressure ranges for different valve configurations. The signal pressure at the low end of the range is dependent on the springs used in the actuator. In order to make this adjustment, you will need an adjustable source of compressed air ranging from 0 to 1 bar (0 to 15 psi) for Baumann 16 and 32 actuators, 0 to 1.4 bar (0 to 20 psi) for Baumann 54 and 70 actuators with a 1/4 NPT external connector.

1. Connect the air source to the signal air port in the lower diaphragm case (key 43). Begin at 0 bar (0 psi) and gradually increase the pressure. Notice the pressure at the point when the valve stem (key 5) just begins to move.

a. If the pressure at this point is too low (lower than the recommended bench initials shown in the spring tables), the actuator and stem assembly should be longer. Turn the valve stem (key 5) out of the actuator stem (key 26) 1/2 turn.

b. If the pressure at this point is too high, the actuator and stem assembly should be shorter. Turn the valve stem (key 5) into the actuator stem (key 26) 1/2 turn.

2. Adjust the length of the valve stem (key 5) as described above. Always turn the valve stem (key 5) using a wrench on the two counter-tightened nuts (key 27). Never turn stems while the plug is on the seat.
3. You may have to repeat steps 1 and 2 several times to get the correct setting.

CAUTION

Remember that the valve stem (key 5) cannot be allowed to turn against the valve seat when the two parts are touching. Before you make any adjustment, apply 1 bar (15 psi) to the actuator. This will lift the valve stem away from the seat, and help prevent damage.

Attaching an Air-to-Retract (ATR) Actuator to a Valve - Part 2

1. Once the bench range has been adjusted correctly, you can complete the assembly. Apply 1 bar (15 psi) to the signal port on the actuator.
2. Using two wrenches, unlock the two counter-tightened nuts (key 27). There are flats on the actuator stem (key 26). Hold these flats with a wrench and, one at a time, turn each nut up as far as possible. Counter-tighten the two nuts together again.
3. Reduce the air pressure to 0 bar (0 psi). Loosen the screws (key 57) which hold the travel indicator scale (key 56) in place. Set the scale so the lowest line matches the level of the travel indicator washer.
4. Set the air pressure to the high end of the valve's operating pressure. The travel indicator should move through the full rated travel of 7.9, 12.7, or 19.1 mm (5/16, 1/2, or 3/4 inch).

Note

The shaft collar (key 25), if applicable, can be set at intermediate positions to provide a minimum opening valve travel stop following calibration.

Attaching an Air-to-Extend (ATE) Actuator to a Valve - Part 1

Follow these instructions when assembling the actuator to a valve or another device which provides a positive stop in one direction. (Baumann 70 actuator is ATR only.)

1. Before starting, identify and locate these parts on the valve assembly, figure 1: stem locknuts (key 27), travel indicator (key 58), bonnet (key 8), yoke drive nut (key 9), and plug and stem assembly (keys 4 and 5). Refer to the assembly instructions for the appropriate Baumann control valve.
2. Place the valve body (key 1 in a vise. Clamp the flat end faces of the valve. DO NOT CLAMP THE SIDES OF THE VALVE. This may distort the shape of the casting, and ruin the valve.
3. Begin to attach the actuator to the valve body. The yoke drive nut (key 9) and travel indicator (key 58) must be removed from the valve body assembly. The hole at the bottom of the actuator yoke (key 17) should fit over the top

of the valve stem (key 5). Tilt the top of the actuator back at an angle so you can access the top of the valve stem (key 5).

4. Position the drive nut (key 9) over the valve stem (key 5) with the flat side facing up. (The rounded side should face down, toward the top surface of the yoke.)
5. Thread the two locknuts (key 27) onto the valve stem (key 5). Turn both nuts down as far as possible. Lock nuts together using two wrenches to counter-tighten them. By turning the locked nuts with a wrench, you can turn the valve stem without damaging the surface of the stem.
6. Place the travel indicator (key 58) over the valve stem (key 5).
7. If applicable, loosen shaft collar (key 25, figure 6) and turn clockwise until it reaches the bottom of the actuator stem (key 26).
8. Apply anti-seize compound to the first few threads of the valve stem (key 5). Place the actuator over the top of the valve bonnet (key 8). The yoke of the actuator will make contact with the top of the bonnet (key 8). Extend the valve stem (key 5) into the actuator stem (key 26). Turn the stem (key 5) until it comes to a stop, then back off 1/2 turn.
9. By hand, tighten the drive nut (key 9).
10. Using a wrench on the counter-tightened nuts (key 27), turn the stem (key 5) up until you feel a resistance.
11. Using a hammer and punch, tighten the drive nut (key 9).
12. Next, make the bench range adjustment. See the next section.

Bench Range Adjustment Air-to-Extend (ATE) Actuator

This adjustment sets the valve so that it opens and closes at the correct signal air pressures. On an air-to-extend actuator, when the pressure reaches the high end of the range, the valve should be completely closed. Once the bench range has been set correctly, the valve should be completely open when it receives the low reading for the signal air pressure, and the valve travel should also be correct. The spring tables list the possible pressure ranges for different valve configurations. The signal pressure at the high end of the range is dependent on the springs used in the actuator. In order to make this adjustment, you will need an adjustable source of compressed air ranging from 0 to 1 bar (0 to 15 psi) for Baumann 16 and 32 actuators, or 0 to 1.4 bar (0 to 20 psi) for Baumann 54 and 70 actuators with a 1/4 NPT external connector.

1. Connect the air source to the signal air port in the upper diaphragm case (key 44). Gradually increase the pressure toward the high rating listed in the appropriate spring table. Notice the pressure at the point when the valve is fully seated, and the valve stem (key 5) stops moving.
   a. If the pressure at this point is too high, the actuator and stem assembly should be longer. Turn the valve stem (key 5) out of the actuator stem (key 26) 1/2 turn.
   b. If the pressure at this point is too low, the actuator and stem assembly should be shorter. Turn the valve stem (key 5) into the actuator stem (key 26) 1/2 turn.
2. Adjust the length of the valve stem (key 5) as described in the last step. Always turn the valve stem (key 5) using a wrench on the two counter-tightened nuts (key 27).

CAUTION

Remember that the valve stem (key 5) cannot be allowed to turn against the valve seat when the two parts are touching. Before you make any adjustment, be certain that there is no air signal to the actuator.

3. You may have to repeat steps 1 and 2 several times to get the correct setting.

Attaching an Air-to-Extend (ATE) Actuator to a Valve - Part 2

1. Once the bench range has been adjusted correctly, you can complete the assembly. Apply 0 bar (0 psi) to the signal port on the actuator.

2. Using two wrenches, unlock the two counter-tightened nuts (key 27). There are flats on the actuator stem (key 26). Hold the flats with a wrench and, one at a time, turn each nut up until you feel a resistance. Counter-tighten the two nuts together again.
3. Apply 1 bar (15 psi) to the signal port. Loosen the screws (key 57) which hold the travel indicator scale (key 56) in place. Set the scale so the lowest line matches the level of the travel indicator (key 58).
4. Apply 0 bar (0 psi). The travel indicator (key 58) should move through the full rated travel of 7.9, 12.7, or 19.1 mm (5/16, 1/2, or 3/4 inches).

Spring Replacement, Changing Bench Range

The springs inside the actuator can be replaced or changed if necessary. This is necessary if you want to change the bench range - the range of pressures over which the actuator is designed to operate. The spring tables list the possible spring combinations. To use the tables, identify the stroke and the pressure range for the new valve configuration. This will tell you the part number and the quantity of the springs needed.

Figures 2 and 3 for Baumann 16 actuators, figures 4 and 5 for Baumann 32 actuators, figures 10 and 11 for Baumann 54 actuators, and figure 14 for Baumann 70 actuators show the correct assembly configurations for air-to-extend and air-to-retract valves. Notice that both types include the same parts, but they are arranged differently. The following sections detail the disassembly and assembly instructions.

Maintenance

⚠ WARNING

Avoid personal injury and property damage from sudden release of process pressure or bursting of parts. Before performing any maintenance operations:

- **Do not remove the actuator from the valve while the valve is still pressurized.**
- **Always wear protective gloves, clothing, and eyewear when performing any maintenance operations.**
- **Disconnect any operating lines providing air pressure, electric power, or a control signal to the actuator. Be sure the actuator cannot suddenly open or close the valve.**
- **Use bypass valves or completely shut off the process to isolate the valve from process pressure. Relieve process pressure on both sides of the valve. Drain the process media from both sides of the valve.**
- **Vent the power actuator loading pressure and relieve any spring precompression.**
- **Use lock-out procedures to be sure the above measures stay in effect while you work on the equipment.**
- **The valve packing box may contain process fluids that are pressurized, *even when the valve has been removed from the pipeline.* Process fluids may spray out when removing the packing hardware or packing rings, or when loosening the packing box pipe plug.**
- **Check with your process or safety engineer for any additional measures that must be taken to protect against process media.**

Field Conversion - ATE to ATR or ATR to ATE

Except for the Baumann 70, these actuators can be changed in the field from air-to-extend (ATE) operation to air-to-retract operation, or from ATR to ATE operation. If you are making this change without changing the bench range, you can reuse the same parts. The parts are simply assembled in a different way. This is described in more detail in the following sections. The following sections list the disassembly and reassembly instructions.

Note

Baumann 70 actuator is available in ATR only.

Field conversion cannot be done on dual-stop actuators.

⚠ WARNING

To avoid personal injury or property damage due to actuator springs being under compression, remove the long cap screws last.

The upper actuator casing may remain fixed to the diaphragm and lower casing during disassembly, even if the casing cap screws have been loosened. If this happens, the actuator springs are still under compression. The upper casing could suddenly come loose and jump, due to the compressed energy of the springs. If the upper casing is stuck to the diaphragm and lower casing when you begin loosening the casing cap screws, pry the casings apart with a prying tool. Always be sure that the springs are dispersing energy and the upper casing is moving against the long bolts during disassembly.

⚠ WARNING

To avoid personal injury or property damage by uncontrolled movement of the actuator yoke, loosen the body/yoke nuts or bonnet/yoke nuts by following the instructions in the next step. Do not remove a stuck actuator by pulling on it with equipment that can stretch or store energy in any other manner. The sudden release of stored energy can cause uncontrolled movement of the actuator yoke.

Removing the Actuator from the Valve

1. **For an air-to-retract (ATR) actuator:** Apply 1 bar (15 psi) for Baumann 16 and 32 actuators, or 1.4 bar (20 psi) for Baumann 54 and 70 actuators, to the signal air inlet located in the lower diaphragm case (key 43). This will lift the plug and stem (4/5) away from the valve seat.

For an air-to-extend (ATE) actuator: Disconnect the signal air line connected to the upper diaphragm case (key 43). This will assure that the actuator is vented and that the valve plug and stem (4/5) are fully lifted away from the valve seat.

2. **For both types:** Place a wrench on the flats of the actuator stem. With an additional wrench, engage the upper locknut (key 27) on the stem and back out the stem about 6.4 mm (1/4 inch). (This procedure will prevent the actuator stem from turning and causing damage to the diaphragm.)
3. Loosen the yoke drive nut (key 9).
4. Using the wrench to work against one of the counter-tightened nuts, turn the valve stem (key 5) completely down until the end unthreads from the actuator stem (key 26).
5. Remove the travel indicator (key 58) from the valve stem (key 5). Loosen the locknuts (key 27) and remove them. Remove the yoke drive nut (key 9).
6. Lift the actuator assembly off of the valve bonnet (key 8).
7. Disconnect airline from ATR actuators.

Disassembling the Actuator

1. Remove the actuator from the valve as described earlier.
2. Remove the cap screws (key 45) and nuts (key 46). Loosen the nuts from the cap screws gradually and evenly. Some units may have a combination of longer and shorter screws. After removing the shorter screws, the remaining longer screws must be loosened evenly. The springs put a lot of force on the diaphragm cases (keys 43 and 44). It is important to release the spring tension gradually before you try to open them.
3. Remove the upper diaphragm case (key 44) and note the position of the parts inside. For the Baumann 70 actuator, the upper diaphragm plate (key 40) must also be removed.
4. Except for the Baumann 16 actuator, lift out the actuator stem (key 26) with the diaphragm plate (key 40) and the diaphragm (key 39). For the Baumann 16 actuator, loosen locknut (key 30) and remove the stem (key 26) through the bottom.
5. For Baumann 32, 54, and 70 actuators, the lower part of the actuator stem (key 26) has flats. Use these flats to clamp the lower end of the stem into a vise. Unscrew the nylon insert locknut (key 30). On an ATE unit, remove the washer (key 112, key 116 for the Baumann 54 actuator), diaphragm (key 39), diaphragm plate (key 40), and for the Baumann 32 actuator, stop cup (key 79). **NOTE: There is not a stop cup for the Baumann 16 actuator. (An ATR unit has the same parts, but they are attached in a different order.)**
6. Replace the diaphragm (key 39) and the O-ring(s) (key 50) if these parts are damaged.

Reassembling the ATE Actuator

1. Use the flats on the actuator stem (key 26) to grip the lower end of the stem in a vise.
2. For the Baumann 32 actuator, place the stop cup (key 79) in position on the upper end of the stem. On an ATE actuator, the stop cup faces down.
3. Place the diaphragm plate (key 40) on the upper end of the stem (key 26), also facing down.
4. Place the diaphragm (key 39) in position. The curved part of the diaphragm should open downward.
5. Place the washer (key 112, key 116 for the Baumann 54 actuator) over the opening in the diaphragm plate.
6. Thread the nylon insert locknut (key 30) onto the end of the stem (key 26) and tighten it.
7. Turn the assembly upside-down, and grip the nylon insert locknut (key 30) in the vise.
8. Place the springs (key 22) onto the diaphragm plate (key 40). Each spring should be centered on one of the raised bosses on the plate.
9. Slide the stop collar (key 115) over the free end of the actuator stem (key 26).
10. Check to see that the O-ring (key 50) is in position on the actuator stem (key 26).
11. Apply some light grease to the O-ring (key 50) and to the surface of the actuator stem (key 26).
12. Slide the lower diaphragm case (key 43), with the actuator yoke (key 17) attached, over the actuator stem (key 26). Make sure that the outer bolt holes of the lower diaphragm case (key 43) line up with the holes in the diaphragm (key 39). If there is interference with any of the springs, rotate the case into another position.
13. Remove the assembly from the vise. Press on the diaphragm assembly slightly to compress the springs. Flip over the assembly and reattach the upper diaphragm case (key 44). As you do this, be sure that all of the springs are upright, and none of them are sitting on the bolt heads. Insert the cap screws (key 45) and tighten the nuts (key 46). It may be necessary to compress the springs slightly to start the nuts. Tighten the nuts evenly, and cross from one side of the assembly to the other as you tighten. This will ensure that the spring tension is taken up evenly.
14. Apply air pressure to the actuator and check for friction or leakage. The actuator should travel smoothly through the entire travel range. Apply leak detection fluid to the area around the guide bushing (key 54). Also check for leaks around the outer edge of the diaphragm (key 39).
15. Make the adjustments described in the section on Bench Range Adjustment - Air-to-Extend (ATE) Valve.

Reassembling the ATR Actuator

1. Use the flats on the actuator stem (key 26) to grip this part in a vise.
2. Place the washer (key 112, key 116 for the Baumann 54 actuator) over the threaded part of the actuator stem (key 26).
3. Place the diaphragm (key 39) in position. The curved part of the diaphragm should open upward.
4. Place the diaphragm plate (key 40) onto the upper end of the stem (key 26), also facing up.
5. For the Baumann 32 actuator, place the stop cup (key 79) in position on the upper end of the stem (key 26). On an ATR actuator, the stop cup faces up.
6. Thread the nylon insert locknut (key 30) onto the end of the stem (key 26) and tighten it.
7. Slide the stop collar (key 115) over the free end of the actuator stem (key 26).
8. Check to see that the O-ring (key 50) is in position on the actuator stem (key 26).
9. Apply some light grease to the O-ring (key 50), and to the surface of the actuator stem (key 26).
10. Slide the actuator stem into the lower diaphragm case (key 43). Turn the assembly so the holes in the diaphragm (key 39) line up with the holes in the diaphragm case (key 43).
11. Place the springs (key 22) onto the diaphragm plate (key 40). Each spring should be centered on one of the raised bosses on the plate.
12. Reattach the upper diaphragm case (key 44). As you do this, be sure that each of the springs is upright. Insert the cap screws (key 45) and tighten the nuts (key 46). It may be necessary to press down on the upper diaphragm case (key 44) slightly to compress the springs slightly and start the nuts. Tighten the nuts evenly, and cross from one side of the assembly to the other as you tighten. This will ensure that the spring tension is taken up evenly.
13. Apply air pressure to the actuator and check for friction or leakage. The actuator should travel smoothly through the entire travel range. Apply leak detection fluid to the area around the guide bushing (key 54). Also check for leaks around the outer edge of the diaphragm.
14. Make the adjustments described in the section on Bench Range Adjustment-Air-to-Retract (ATR) Valve.

⚠ WARNING

To avoid personal injury or equipment damage due to possible sudden shifting or falling of the valve assembly, do not lift the valve assembly by the handwheel.

Actuator Maintenance

A routine maintenance schedule might call for regular replacement of the O-ring(s) (key 50) or the diaphragm (key 39). Follow the disassembly and reassembly instructions listed earlier.

Handwheel Operation

For air-to-retract actuators, turn handwheel clockwise to manually retract the stem and counterclockwise to extend the stem. The small locking knob on top of the handwheel assembly enables the user to lock the desired handwheel position.

For an air-to-extend actuator, turn the handwheel clockwise to manually extend the stem and counterclockwise to retract the stem. The lever on the handwheel stem enables the user to lock the desired handwheel position.

Figure 1. Typical Baumann Valve Components

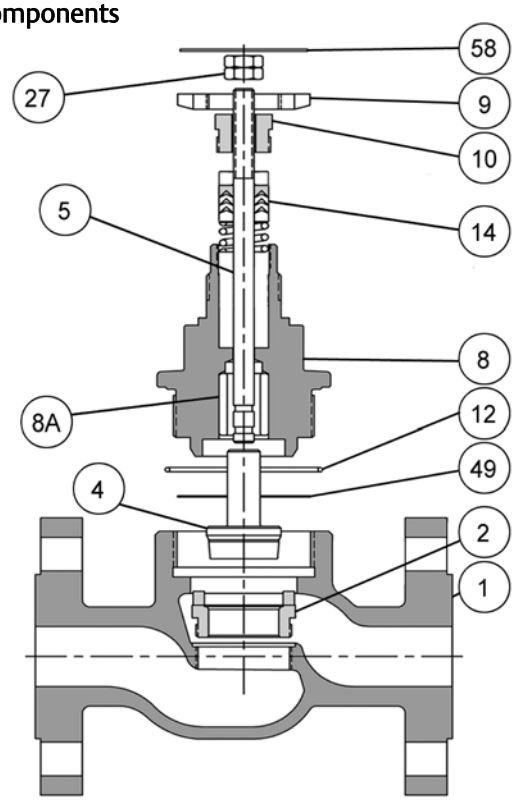

Table 1. Common Valve Parts

Key Number	Description
1	Valve Body
2	Seat Ring
4	Plug
5	Stem
8	Bonnet
8A	Bonnet Bushing
9	Drive Nut
10	Packing Follower
12	O-Ring
14	Packing
27	Locknuts
49	Body Gasket
58	Travel Indicator

Figure 2. Baumann 16 Actuator, Air-to-Retract (ATR)

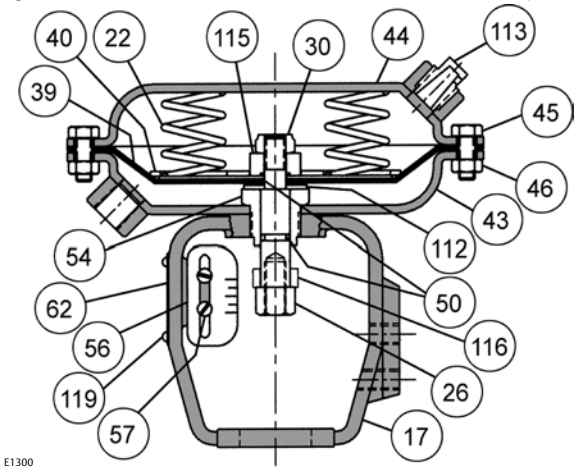

Figure 3. Baumann 16 Actuator, Air-to-Extend (ATE)

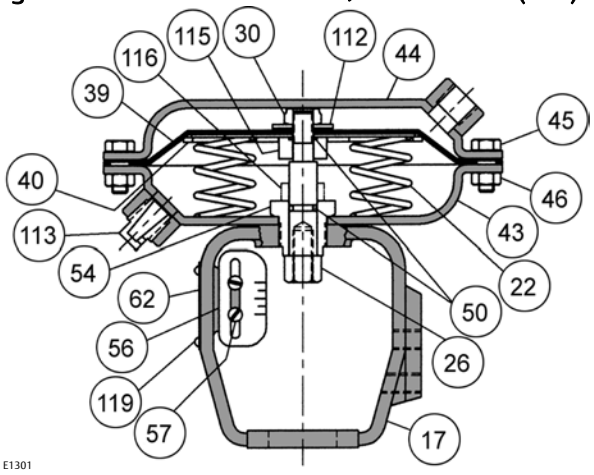

Table 2. Baumann 16 Actuator Common Parts

Key Number	Description		Part Number	Quantity
17	Actuator yoke		81811	1
22*	Spring		See table 3	See table 3
26	Actuator Stem		81840	1
30	Nut, Self-Locking		81844	1
39*	Diaphragm		011759-001-686	1
40	Diaphragm Plate		81850-1	1
43	Diaphragm Case, Lower	Steel	81820	1
		S30400	GG15182X012	1
44	Diaphragm Case, Upper	Steel	81823	1
		S30400	GG15181X012	1
45	Hex Head Cap Screw		81824	8
46	Nut, Hex		81825	8
50*	O-Ring [FKM (Fluorocarbon)]		24080	2
54	Coupling		81830	1
56	Travel Scale, 0.5 inch		983674-001-250	1
	Travel Scale, 0.3125		87935	
57	Screw		81812	2
62	Nameplate		983753-21	1
112	Washer		25861-24	1
113	Vent Plug		24147	1
115	Collar		81870	1
116	Collar (0.3125 inch travel only)		81842	1
119	Drive Screw		24686	2

* Recommended spare part

Table 3. Baumann 16 Actuator Spring Ranges

ACTION	TRAVEL		NOMINAL BENCH SPRING RANGE		SPRING PART NO. (KEY 22)	QTY	COLLAR (KEY 116)	QTY
	mm	Inch	bar	psi				
ATE (ATC)	12.7	0.5	0.2-0.9	3-13	81860	4	---	---
	7.9	0.3125	0.3-0.9	4-13	81864	4	81842	1
ATR (ATO)	12.7	0.5	0.2-1.0	3-15	81860	5	---	---
	7.9	0.3125	0.3-1.0	4-15	81863	4	81842	1

Figure 4. Baumann 32 Actuator, Air-to-Retract (ATR)

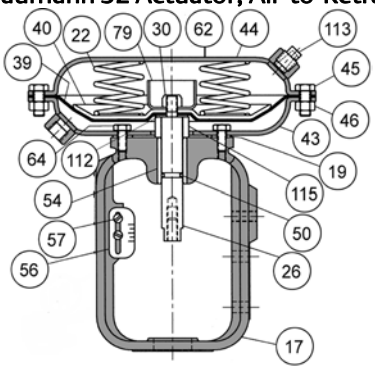

Figure 5. Baumann 32 Actuator, Air-to-Extend (ATE)

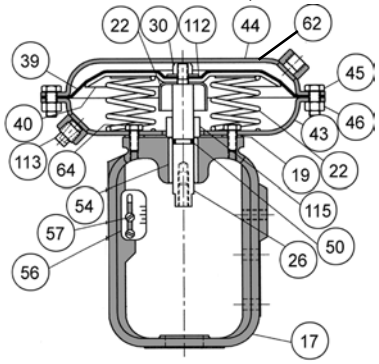

Table 4. Baumann 32 Actuator Common Parts

KEY NO.	DESCRIPTION		12.7 mm (0.5 in) TRAVEL		19.1 mm (0.75 in) TRAVEL	
			Part No.	Qty	Part No.	Qty
17/54	Yoke w / guide bushing	Ductile Iron	24184-10	1	24184-10	1
		300 Series Stainless Steel	24184-10X022	1	24184-10X022	1
	Yoke (for Fisher® valves) w/ guide bushing	Ductile Iron	24184-1-1	1	24184-1-1	1
		300 Series Stainless Steel	- - -	- - -	- - -	- - -
19	Gasket (standard)		See key 39A			
	Gasket (Hi-Temperature)					
22	Actuator Spring		See table 5	---	See table 5	---
26	Actuator Stem, 5/16 thread		24613	1	24613	1
	Actuator Stem (for Fisher valves), 3/8 thread	Steel	24613-2		24613-2	
		300 Series Stainless Steel	- - -	- - -	- - -	- - -
30(2)	Nylon insert locknut		See key 39A			
39(2)	Diaphragm		See key 39A			
39A(1,2)	Diaphragm Kit (standard)		24462-1	1	24462-1	1
	Diaphragm Kit (Hi-Temperature)		24464-1	1	24464-1	1
40	Diaphragm Plate		24811	1	24811	1
43	Diaphragm Case (Lower)	Steel	011767-004-999	1	011767-004-999	1
		300 Series Stainless Steel	011767-004-999ZX032	1	011767-004-999ZX032	1
44	Diaphragm Case (Upper)	Steel	011766-001-999	1	011766-001-999	1
		300 Series Stainless Steel	011766-001-999ZX032	1	011766-001-999ZX032	1
45	Cap Screw		25913-1	8	25913-1	8
46	Nut		971511-011-250	8	971511-011-250	8
50(2)	O-Ring FKM (Fluorocarbon)		See key 39A			
56	Travel Indicator Scale		983674-001-250	1	983674-003-250	1
57	Machine Screw		971302-003-250	2	971302-003-250	2
62	Nameplate		983753-21	1	983753-21	1
64	Cap Screw		See key 39A			
79	Stop Cup		See table 5	---	See table 5	---
112	Washer		25861-24	1	25861-24	1
113	Vent Plug		24147	1	24147	1
115	Stop Collar		24187	1	24187	1

1. Recommended spare parts.
2. Diaphragm kit (39A) includes Locknut (key 30), O-ring (key 50), gasket (key 19), cap screw (key 64), and Diaphragm (key 39). These parts are not sold separately.

Table 5. Baumann 32 Mini Actuator Common Parts

KEY NO.	DESCRIPTION		12.7 mm (0.5 in) TRAVEL	
			Part No.	Qty
17	Yoke		81811	1
54	Yoke Coupling		81830	1
19	Gasket (standard)		009191-445-883	1
22	Actuator Spring		See table 5	---
26	Actuator Stem, 5/16 thread		81840	1
39(2)	Diaphragm		See key 39A	
39A(1,2)	Diaphragm Kit (standard)		24462-7X012	1
40	Diaphragm Plate		24811	1
43	Diaphragm Case (Lower)	Steel	011766-002-999	1
		300 Series Stainless Steel	011766-002-999X022	1
44	Diaphragm Case (Upper)	Steel	011766-001-999	1
		300 Series Stainless Steel	011766-001-999ZX032	1
45	Cap Screw		25913-1	8
46	Nut		971511-011-250	8
56	Travel Indicator Scale		983674-001-250	1
57	Machine Screw		81812	2
62	Nameplate		983753-21	1
112	Washer		25861-24	1
113	Vent Plug		24147	1
115	Stop Washer		25958-1	1

1. Recommended spare parts.
2. Diaphragm kit (39A) includes Locknut (key 30), O-ring (key 50), and Diaphragm (key 39). These parts are not sold separately.

Table 6. Baumann 32 Actuator Spring Ranges

ACTION	TRAVEL		NOMINAL BENCH SPRING RANGE		SPRING PART NO. (KEY 22)	QTY	STOP CUP (KEY 79)	QTY
	mm	in	bar	psi				
ATE (ATC)	12.7	0.5	0.2-0.6	3-9	24820	4	24116	1
			0.2-0.7	3-10	24821	6	24116	1
			0.2-0.9	3-13	24820	6	24116	1
	19.1	0.75	0.2-0.7	3-10	24821	4	24830	1
			0.2-0.9	3-13	24821	6	24830	1
ATR (ATO)	12.7	0.5	0.2-0.7	3-9	24820	4	24116	1
			0.3-1.0	5-15	24820	6	24116	1
			0.5-1.0	7-15	24821	6	24830	1
	19.1	0.75	0.2-0.7	3-9	24821	4	24830	1
			0.3-1.0	5-15	24827	6	24830	1

Figure 6. Baumann 32 Actuator with Handwheel and Optional Up Stop, Air-to-Retract (ATR)

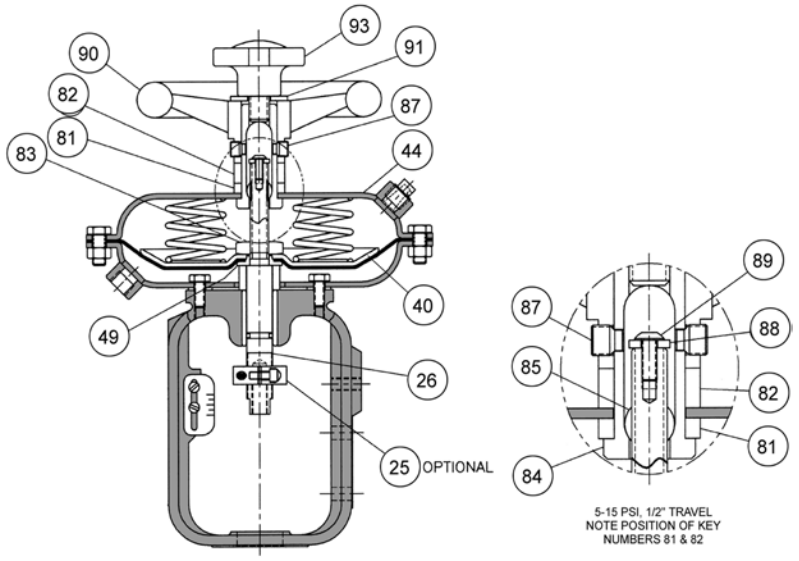

CAUTION

Do not continue to turn handwheel after the stem is fully extended (valve fully closed and plug seated) or fully retracted (valve fully open) to avoid damage to the handwheel assembly.

Table 7. Baumann 32 ATR with Handwheel and Up Stop (ATO)

Key No.	Description	Part No.	Qty
25	Shaft Collar (optional up stop)	24732-2	1
26	Actuator Stem, 5/16 thread	24613-4	1
	Actuator Stem (for Fisher valves), 3/8 thread	24613-3	1
	Actuator Stem (for optional up stop collar)	24613-16	1
39A(1,2)	Diaphragm Kit (standard)	24462-3	1
	Diaphragm Kit (Hi-Temperature)	24464-3	1
40	Diaphragm Plate	24811-1	1
44	Diaphragm Case (Upper)	011766-012-999	1
49	Spacer	24276	1
81	Spacer	24855-1	1
82	Spacer	24855	1
83	Stem Extension	24602-1	1
84	Clevis	24603-1	1
85	Nut, Round Bronze	24604	1
87	Screw, Set Socket	24606	2
88	Washer, Flat	24620	1
89	Screw, Socket Head	24619	1
90	Handwheel	24605	1
91	Washer, Flat	25958	1
93	Locking Knob	24607	1

1. Recommended spare parts
2. Diaphragm kit (39A) includes O-ring (key 50) and Diaphragm (key 39). These parts are not sold separately.

Figure 7. Baumann 32 Actuator with Handwheel and Optional Dual Stop, Air-to-Extend (ATE)

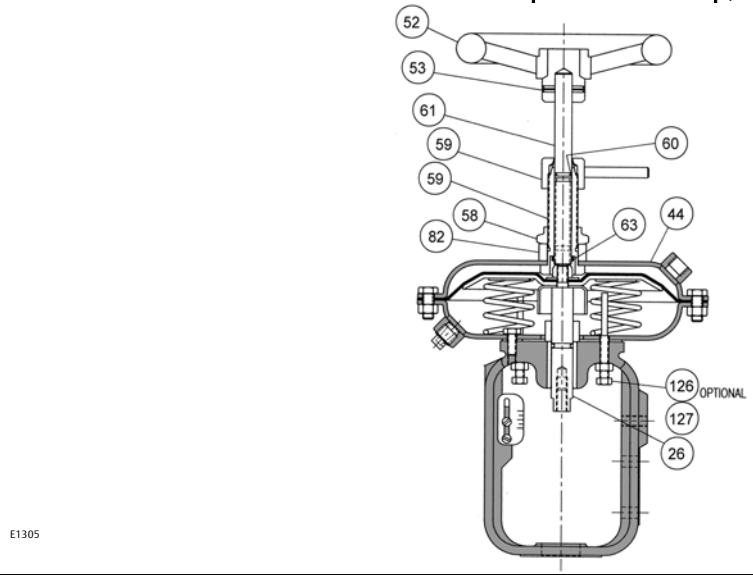

CAUTION

Do not continue to turn handwheel after the stem is fully extended (valve fully closed and plug seated) or fully retracted (valve fully open) to avoid damage to the handwheel assembly.

Table 8. Baumann 32 ATE with Handwheel and Dual Stop

Key No.	Description	Part No.	Qty
26	Actuator Stem, 5/16 thread (Handwheel, No Dual Stop)	24613	1
	Actuator Stem (for Fisher valves), 3/8 thread (Handwheel, No Dual Stop)	24613-2	1
	Actuator Stem, 5/16 thread (Handwheel and Dual Stop)	24613-15	1
	Actuator Stem (for Fisher valves), 3/8 thread (Handwheel and Dual Stop)	24613-20	1
44	Diaphragm Case (Upper)	24807T001	1
52	Handwheel, P/N 24605Z		
53	Roll Pin, P/N 25897		
55	Stem, Handwheel, P/N 25976		
58	Nut, Self-Locking		
59	Adapter, Handwheel		
60	O-Ring		
61	Lock-Nut		
63	Spring Pin		
82	Bushing, Handwheel		
126	Hex Bolt (0.5 in travel) - Dual Stop Only	24756-6	2
	Hex Bolt (0.75 in travel) - Dual Stop Only	24756-7	
127	Hex Nut - Dual Stop Only	971511-010-250	2
112	Washer - Dual Stop Only	25861-24	1

Figure 8. Baumann 32 Actuator with Dual Stop Air-to-Retract (ATR)

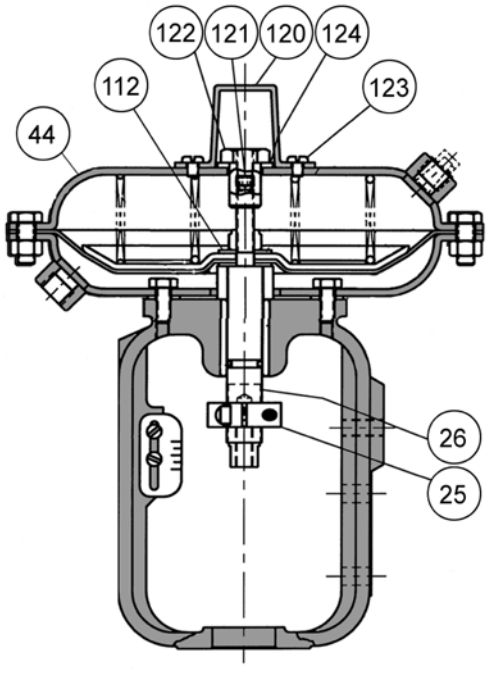

Figure 9. Baumann 32 Actuator with Dual Stop Air-to-Extend (ATE)

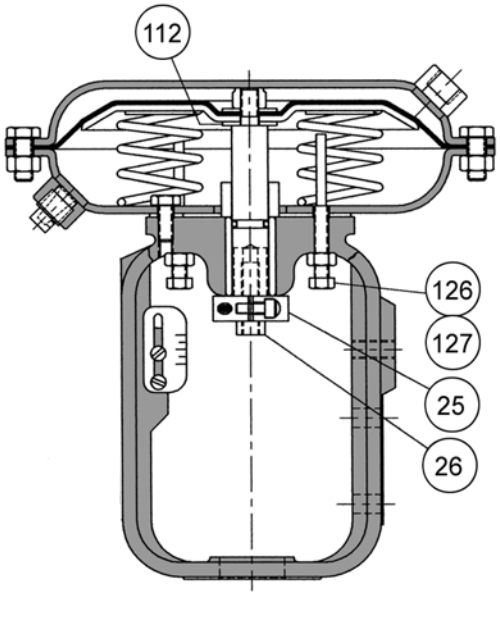

Table 9. Baumann 32 Actuator with Dual Stop (ATR) Parts (ATO)

Key No.	Description		Part No.	Qty
25	Shaft Collar		24732-2	1
26	Actuator Stem, 5/16 thread		24732-1	1
	Actuator Stem (for Fisher valves), 3/8 thread	300 Series SST	24732-6	
44	Diaphragm Case (Upper)	Steel	24132	1
		300 Series SST	24132ZX022	1
112	Washer		25861-24	1
120	Travel Stop Cover	Steel	24128	1
		300 Series SST	24128S	1
121	Set Screw		24126	1
122	Travel Stop		24129	1
123	Screw		24128-1	2
124	Bottom Ring		25602	1

Table 10. Baumann 32 Actuator with Dual Stop (ATE) Parts (ATC)

Key No.	Description	Part No.	Qty
25	Shaft Collar	24732-2	1
26	Actuator Stem, 5/16 thread	24613-15	1
	Actuator Stem (for Fisher valves), 3/8 thread	24613-20	
112	Washer	25861-24	1
126	Hex Bolt, (0.5 in travel)	24756-6	2
	Hex Bolt, (0.75 in travel)	24756-7	
127	Hex Nut	971511-010-250	2

Figure 10. Baumann 54 Actuator, Air-to-Retract (ATR)

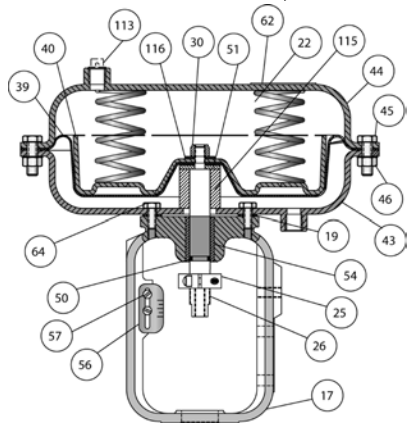

Figure 11. Baumann 54 Actuator, Air-to-Extend (ATE)

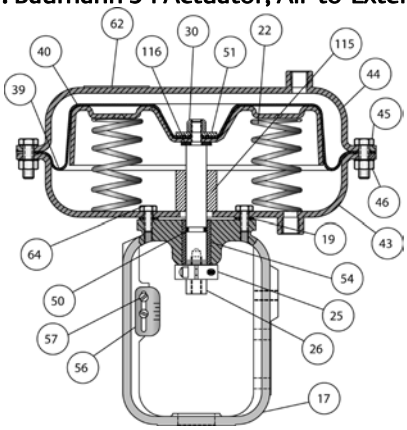

Table 11. Baumann 54 Actuator Common Parts

Key No.	Description		12.7 mm (0.5 in Travel)		19.1 mm (0.75 in) Travel	
			Part No.	Qty	Part No.	Qty
17/54	Yoke w / guide bushing	Ductile Iron	24184-10	1	24184-10	1
		300 Series Stainless Steel	24184-10X022	1	24184-10X022	1
	Yoke (for Fisher valves) w / guide bushing	Ductile Iron	24184-1-1	1	24184-1-1	1
		300 Series Stainless Steel	- - -	- - -	- - -	- - -
19	Gasket (standard)		See Key 39A			
	Gasket (Hi-Temperature)	Steel				
		300 Series Stainless Steel				
22	Actuator Spring	Steel	See table 12	- - -	See table 12	- - -
		300 Series Stainless Steel	See table 13	- - -	See table 13	- - -
25	Shaft Collar		24732-2	1	24732-2	1
26	Actuator Stem, 5/16 thread		24295-2	1	24295-2	1
	Actuator Stem, 3/8 thread	Steel	24295-3		24295-3	
		300 Series Stainless Steel	- - -	- - -	- - -	- - -
30(2)	Nylon Insert Locknut		See Key 39A			
39(2)	Diaphragm		See Key 39A			
39A(1,2)	Diaphragm Kit (standard)		24463-1	1	24463-1	1
	Diaphragm Kit (Hi-Temperature)	Steel	24465-1	1	24465-1	1
		300 Series Stainless Steel	- - -	- - -	- - -	- - -
40	Diaphragm Plate		0.330-0420	1	0.330-0420	1
43	Diaphragm Case (Lower)	Steel	24294	1	24294	1
		300 Series Stainless Steel	24294ZX032	1	24294ZX032	1
44	Diaphragm Case (Upper)	Steel	25989	1	25989	1
		300 Series Stainless Steel	25989ZX032	1	25989ZX032	1
45	Cap Screw	Steel	See table 12	- - -	See table 12	- - -
		300 Series Stainless Steel	See table 13	- - -	See table 13	- - -
46(1)	Nut		971511-011-250	8	971511-011-250	8
50(2)	O-Ring (FKM (Fluorocarbon))		See Key 39A			
51	Spacer		24724	1	24724	1
56	Travel Indicator Scale		983674-001-250	1	983674-003-250	1
57	Machine Screw		971302-003-250	2	971302-003-250	2
62	Nameplate		983753-21	1	983753-21	1
64	Hex Head Cap Screw		See Key 39A			
113	Vent Plug		24147	1	24147	1
115	Stop Collar(3)		24297-1	1	24297-1	1
116	Washer		25861-24	1	25861-24	1

1. Recommended spare parts.
2. Diaphragm key (39A) includes locknut (key 30), O-ring (key 50), gasket (key 19), cap screw (key 64), and diaphragm (key 39). These parts are not sold separately.
3. See table 12 for stop collar for sanitary valve.

Table 12. Baumann 54 Actuator Spring Ranges - Non-Sanitary

ACTION	TRAVEL		NOMINAL BENCH SPRING RANGE		SPRING PART NO. (KEY 22)	QTY	CAP SCREWS (KEY 45)	QTY	CAP SCREW COVERS	QTY
	in	mm	psi	bar						
ATE (ATC)	0.50	12.7	3-10	0.2-0.7	24906	4	24783	2	24900	2
							25913-1	6		
			3-13	0.2-0.9	24906	6	24783	2	24900	2
							25913-1	6		
	0.75	19.1	3-10	0.2-0.7	25915	4	24783	2	24900	2
							25913-1	6		
			3-13	0.2-0.9	25915	6	24783	2	24900	2
							25913-1	6		
ATR (ATO)	0.50	12.7	3-10	0.2-0.7	24906	4	24783	2	24900	2
							25913-1	6		
			5-15	0.3-1.0	24906	6	24783	2	24900	2
							25913-1	6		
			6-14	0.4-1.0	25915	6	24783	2	24900	2
							25913-1	6		
			7-13	0.5-0.9	25915	6	24783	2	24900	2
							25913-1	6		
			7-15	0.5-1.0	25915	6	24783	2	24900	2
							25913-1	6		
			8-15	0.6-1.0	25915	6	24783	2	24900	2
							25913-1	6		
			9-15	0.6-1.0	21819	4	24783	2	24900	2
							25913-1	6		
			10-16	0.7-1.1	25940	6	24783	2	24900	2
							25913-1	6		
			11-15	0.8-1.0	24654	6	24783	2	24900	2
							25913-1	6		
			12-16	0.8-1.1	24654	6	24783	2	24900	2
							25913-1	6		
	0.75	19.1	3-10	0.2-0.7	25915	4	24783	2	24900	2
							25913-1	6		
			3-14	0.2-1.0	24906	4	24783	2	24900	2
							25913-1	6		
			4-16	0.2-1.1	24906	4	24783	2	24900	2
							25913-1	6		
			5-15	0.3-1.0	25915	6	24783	2	24900	2
							25913-1	6		
			6-16	0.4-1.1	25915	6	24783	2	24900	2
							25913-1	6		
			7-13	0.5-0.9	25940	4	24783	2	24900	2
							25913-1	6		
			8-14	0.6-1.0	21819	3	24783	2	24900	2
							(ATO)	6		
			9-17	0.6-1.2	21819	4	24783	2	24900	2
							25913-1	6		
			10-14	0.7-1.0	41825	6	24783	2	24900	2
							25913-1	6		
			11-16	0.8-1.1	24654	6	24783	2	24900	2
							25913-1	6		

Table 13. Baumann 54 Actuator Spring Ranges - Sanitary

ACTION	TRAVEL		NOMINAL BENCH SPRING RANGE		SPRING PART NO. (KEY 22)	QTY	CAP SCREWS (KEY 45)	QTY	CAP SCREW COVERS	QTY	STOP COLLAR (KEY 115)	QTY
	in	mm	psi	bar								
ATE (ATC)	0.50	12.7	3-10	0.2-0.7	24906	4	24783	2	24900	2	24907	1
							25913-1	6				
			3-13	0.2-0.9	24906	6	24783	2	24900	2	24907	1
							25913-1	6				
	0.75	19.1	3-10	0.2-0.7	25915	4	24783	2	24900	2	24297	1
							25913-1	6				
			3-13	0.2-0.9	25915	6	24783	2	24900	2	24333	1
							25913-1	6			24187	2
ATR (ATO)	0.50	12.7	5-15	0.3-1.0	24906	6	24783	2	24900	2	24297	1
							25913-1	6				
			8-15	0.6-1.0	25915	6	24783	2	24900	2	24670 (machined to 1.54 inch length)	1
							25913-1	6				
	0.75	19.1	5-15	0.3-1.0	25915	6	24783	2	24900	2	24297	1
							25913-1	6				
			7-13	0.5-0.9	25940	4	24783	2	24900	2	24333	1
							25913-1	6			24187	2
			8-14	0.6-1.0	21819	3	24783	2	24900	2	24670-2 (machined to 1.50 inch length)	1
							25913-1	6				

CAUTION

Do not continue to turn the handwheel after the stem is fully extended (valve fully closed and plug seated) or fully retracted (valve fully open) to avoid damage to the handwheel assembly.

Figure 12. Baumann 54 Actuator, Air-to-Retract (ATR) with Handwheel

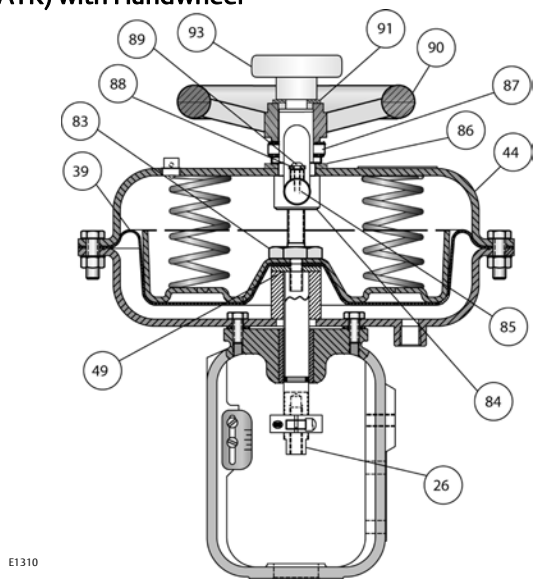

Figure 13. Baumann 54 Actuator, Air-to-Extend (ATE) with Handwheel

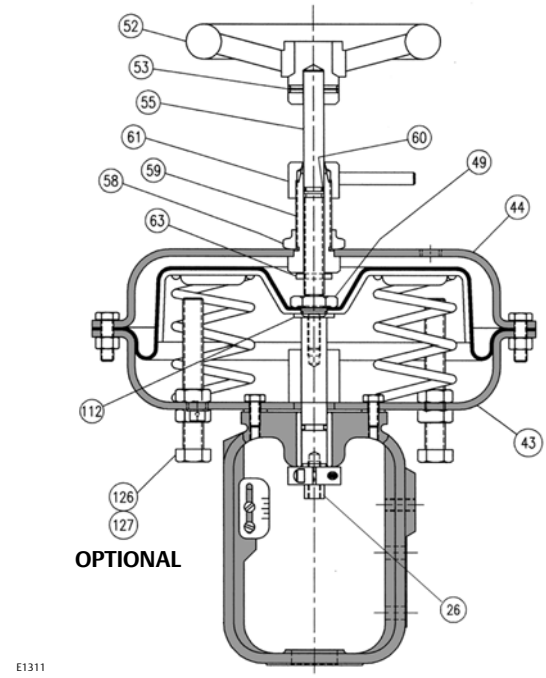

Table 14. Baumann 54 Actuator (ATR) with Handwheel Parts (ATO)[1]

Key No.	Description	Part No.	Qty
26	Actuator Stem, 5/16 thread	24601	1
	Actuator Stem, 3/8 thread	GE50137X012	
44	Diaphragm Case (Upper)	24608	1
49	Spacer	24726	1
83	Nut	24603-1	1
84	Clevis	24603	1
85	Nut, Round Bronze	24604	1
86	Washer	25613	1
87	Screw, Set Socket	24606	2
88	Washer, Flat	24620	1
89	Screw, Socket Head	24619	1
90	Handwheel	24605	1
91	Washer, Flat	25958	2
93	Locking Knob	24607	1

1. Standard construction furnishes up and down travel stops.

Table 15. Baumann 54 Actuator (ATE) with Handwheel Parts (ATC)

Key No.	Description	Part No.	Qty
26	Actuator Stem, 5/16 thread	24295	1
	Actuator Stem, 3/8 thread	24295-1	1
43	Diaphragm Case (Lower)	24294	1
44	Diaphragm Case (Upper)	24608	1
49	Hex Bolt	25987	1
52	Handwheel	Kit No. 25985	1
53	Roll Pin		
55	Stem, Handwheel		
58	Nut, Self-Locking	25924	1
59	Adapter	25978	1
60	O-Ring	25926	1
61	Lock-nut	25979	1
63	Roll Pin	25931	1
112	Washer	25918	1
126	Hex Tap Bolt (for dual stop only)	24756-8	3
127	Hex Jam Nut (for dual stop only)	42789	3

Figure 14. Baumann 70 Actuator

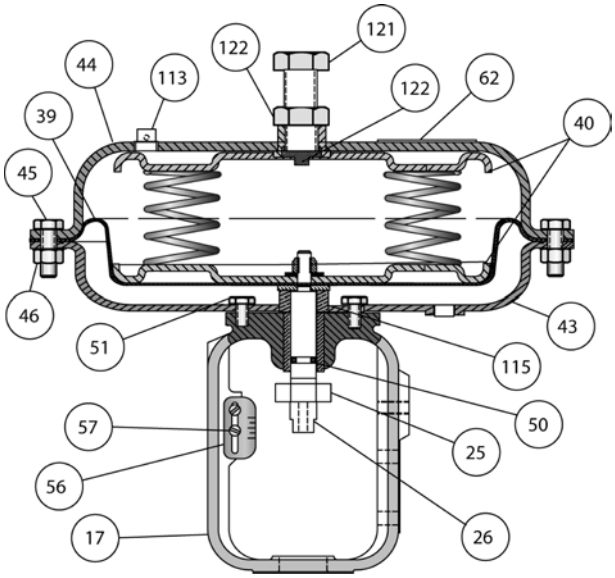

Table 16. Baumann 70 Actuator Parts

Key No.	Description	Part No.	Qty
17/54	Yoke w / guide bushing	24184-10	1
	Yoke (for Fisher valves) w / guide bushing	24184-1-1	
19	See Key 39A		
22	Actuator Spring	See Table 16	---
25	Shaft Collar	24732-2	1
26	Actuator Stem, 5/16 thread	24330-2	1
	Actuator Stem, 3/8 thread	24330-3	
30(2)	Nylon Insert Locknut	See Key 39A	
39(2)	Diaphragm	See Key 39A	
39A(1, 2)	Diaphragm Kit (standard)	24471-1	1
40	Diaphragm Plate	24350	2
43	Diaphragm Case (Lower)	24310	1
44	Diaphragm Case (Upper)	24317	1
45	Cap Screw (short)	See Table 16	---
46	Nut	24705M	16
50(2)	O-ring (FKM (Fluorocarbon))	See Key 39A	
51	Spacer	24724	1
56	Travel Indicator Scale (0.5 in travel)	983674-001-250	1
	Travel Indicator Scale (0.75 in travel)	983674-003-250	
57	Machine Screw	971302-003-250	2
62	Serial Plate	983753-21	1
64	See Key 39A		
112	Washer	25861-24	2
113	Vent Plug	24147	1
115	Stop Collar	24333	1
121	Set Screw	24332-1	1
122	Jam Nut	24334	1
125	Adjustment Screw Seat	24331	1

1. Recommended spare parts.
2. Diaphragm key (39A) includes locknut (key 30), O-ring (key 50), gasket (key 19), cap screw (key 64), and diaphragm (key 39). These parts are not sold separately.

Table 17. Baumann 70 Actuator Spring Ranges

ACTION	TRAVEL		NOMINAL BENCH SPRING RANGE		SPRING PART NO. (KEY 22)	QTY	CAP SCREWS (KEY 45)	QTY	CAP SCREW COVERS	QTY
	in	mm	psi	bar						
ATR (ATO)	0.5	12.7	2-13	0.1-0.9	24380	8	24335M	12	---	---
							24336M	4	24338	4
			3-9	0.2-0.6		4	24335M	12	---	---
							24336M	4	24338	4
			3-14	0.2-1.0		8	24335M	12	---	---
							24336M	4	24338	4
			5-14	0.3-1.0	24906	6	24335M	12	---	---
							24336M	4	24338	4
			7-14	0.5-1.0	25915	8	24335M	12	---	---
							24336M	4	24338	4
			8-15	0.6-1.0			24335M	12	---	---
							24336M	4	24338	4
			9-15	0.6-1.0		6	24335M	12	---	---
							24336M	4	24338	4
			10-15	0.7-1.0	25940	6	24335M	12	---	---
							24336M	4	24338	4
			11-15	0.8-1.0	24654	8	24335M	12	---	---
							24336M	4	24338	4
			12-16	0.8-1.1	24654	8	24335M	12	---	---
							24336M	4	24338	4
	0.75	19.1	4-15	0.3-1.0	24380	6	24335M	12	---	---
							24336M	4	24338	4
			3-9	0.2-0.6	25915	4	24335M	12	---	---
							24336M	4	24338	4
			4-13	0.3-0.9	24906		24335M	12	---	---
							24336M	4	24338	4
			5-14	0.3-1.0			24335M	12	---	---
							24336M	4	24338	4
			6-14	0.4-1.0	25915	6	24335M	12	---	---
							24336M	4	24338	4
			7-15	0.5-1.0			24335M	12	---	---
							24336M	4	24338	4
			8-15	0.6-1.0	21819	4	24335M	12	---	---
							24336M	4	24338	4
			9-16	0.6-1.1	25940	6	24335M	12	---	---
							24336M	4	24338	4
			10-15	0.7-1.0	41825	8	24335M	12	---	---
							24336M	4	24338	4
			11-17	0.8-1.2	24654		24335M	12	---	---
							24336M	4	24338	4
			12-18	0.8-1.2	24654		24335M	12	---	---
							24336M	4	24338	4

Figure 15. Dimensional Drawings

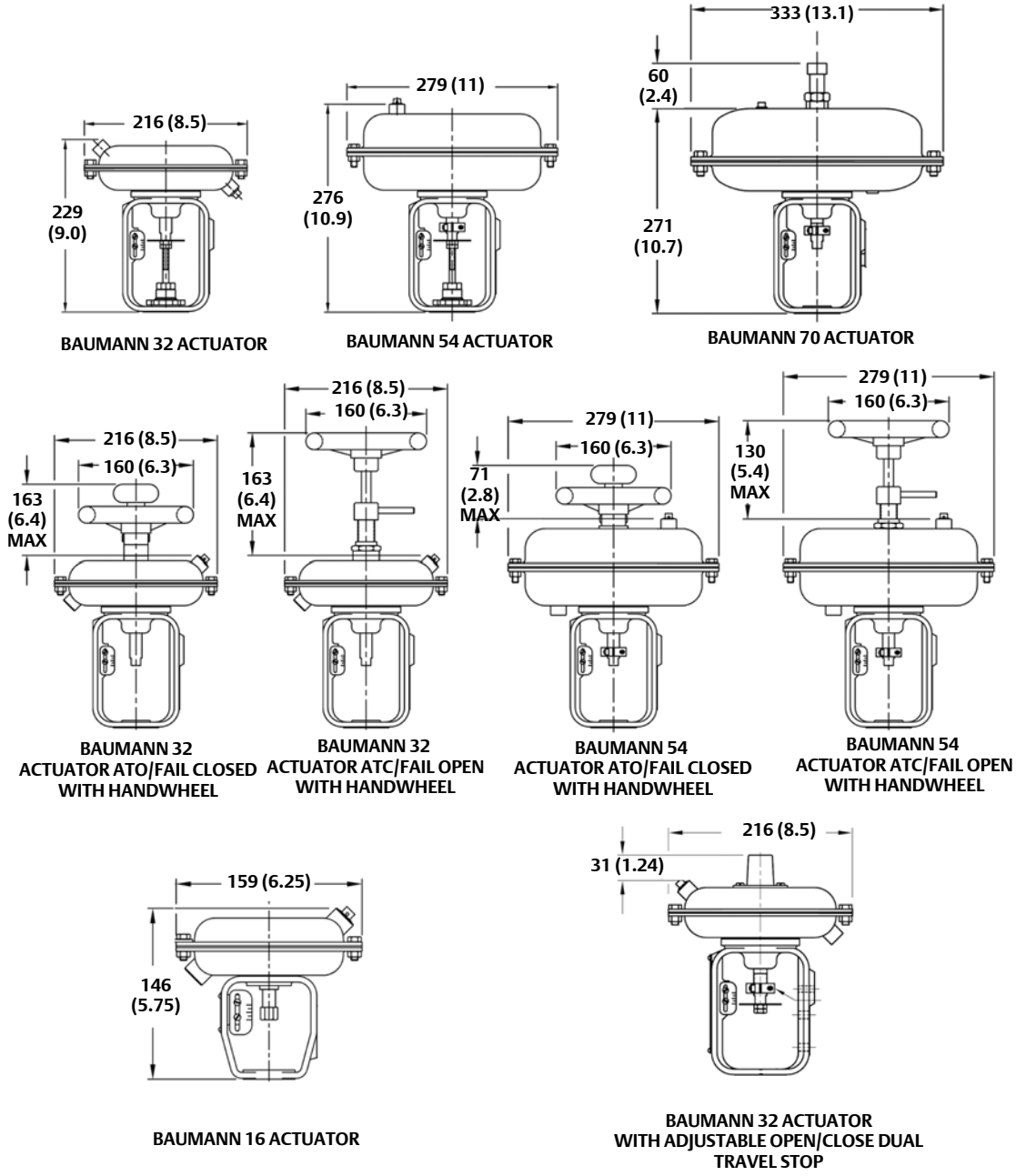

Parts Ordering

When corresponding with your Emerson Process Management sales office about this equipment, always mention the valve serial number. When ordering replacement parts, also specify the key number, part name, and desired material using the Parts List table.

⚠ WARNING

Use only genuine Fisher replacement parts. Components that are not supplied by Emerson Process Management should not, under any circumstances, be used in any Fisher valve, because they may void your warranty, might adversely affect the performance of the valve and actuator, and could cause personal injury and property damage.

Neither Emerson, Emerson Process Management, nor any of their affiliated entities assumes responsibility for the selection, use or maintenance of any product. Responsibility for proper selection, use, and maintenance of any product remains solely with the purchaser and end user.

Baumann and Fisher are marks owned by one of the companies in the Emerson Process Management business unit of Emerson Electric Co. Emerson Process Management, Emerson, and the Emerson logo are trademarks and service marks of Emerson Electric Co. All other marks are the property of their respective owners.

The contents of this publication are presented for informational purposes only, and while every effort has been made to ensure their accuracy, they are not to be construed as warranties or guarantees, express or implied, regarding the products or services described herein or their use or applicability. All sales are governed by our terms and conditions, which are available upon request. We reserve the right to modify or improve the designs or specifications of such products at any time without notice.

Emerson Process Management
Marshalltown, Iowa 50158 USA
Sorocaba, 18087 Brazil
Chatham, Kent ME4 4QZ UK
Dubai, United Arab Emirates
Singapore 128461 Singapore

www.Fisher.com

© 2009, 2014 Fisher Controls International LLC. All rights reserved.

EMERSON
Process Management