SG1 Series

Regulators - Pressure Reducing

DSG012031X012

Specifications

For questions about this product, please consult TESCOM.

OPERATING PARAMETERS

Pressure rating per criteria of CGA E-4; ASME B31; ASME BPVC

Maximum Inlet Pressure
C_V = 0.06: 4500 psig / 310 bar
C_V = 0.2: 3000 psig / 207 bar

Maximum Outlet Pressure
15, 25, 50, 125, 250 psig
103, 172, 345, 862, 1724 kPa
1.0, 1.7, 3.4, 8.6, 17.2 bar

Design Proof Pressure
150% maximum rated

Leakage
Internal: Bubble-tight
External: Designed to meet
< 2 x 10^{-8} atm cc/sec He / < 2 x 10^{-8} mbar l/s He

Operating Temperature
PCTFE seat: -40°F to 140°F / -40°C to 60°C
Polyimide* seat: -40°F to 250°F / -40°C to 121°C

Flow Capacity
C_V = 0.06, 0.2

Decaying Inlet Characteristic
C_V = 0.06
0.37 psig / 100 psig
0.03 bar / 6.9 bar
C_V = 0.2
1.45 psig / 100 psig
0.10 bar / 6.9 bar

MEDIA CONTACT MATERIALS

Body
316L Stainless Steel, Nickel-Plated Brass

Seat
PCTFE, Polyimide*

Diaphragm
316L Stainless Steel, Neoprene

Filter
10 micron nominal sintered Bronze
10 micron nominal sintered 316 Stainless Steel

Seal
Teflon® or Buna-N

Remaining Parts
Brass, 300 Series Stainless Steel

OTHERS

Connections
Inlet and outlet: 1/4" NPTF
Accessories: 1/4" NPTF

Cleaning
CGA 4.1 and ASTM G93

Weight
2.4 lbs / 1.1 kg

Teflon® and Vespel® are registered trademarks of E.I. du Pont de Nemours and Company. Meldin® is a registered trademark of Saint-Gobain.

**Per ASTM D 6456-99 Type II Class 1M (Meldin® 7021 or Vespel® SP-21)*

TESCOM SG1 Series is a compact, lightweight high purity single-stage regulator for specialty and industrial gas flows of less than 10 SCFM / 283 SLPM. Sensitive, extra long-life metal diaphragm ensures gas purity and integrity. User-friendly model number enables the specifier to select optional gauges, relief and shut-off valves, and cylinder connections as part of the regulator assembly.

Applications

- Laboratory and Point-of-Use Gas Systems in medical, pharmaceutical, food and beverage, and other high purity applications
- Process analyzer gases, metal fabrication and specialty and industrial gas cylinders

Features and Benefits

- Cartridge valve design incorporates a 10 micron filter that protects the regulator seat and makes service simple
- Optional neoprene diaphragm provides exceptional sensitivity for precise pressure control

TESCOM

SG1 Series Regulator Drawing

5 Ports
(Top view)

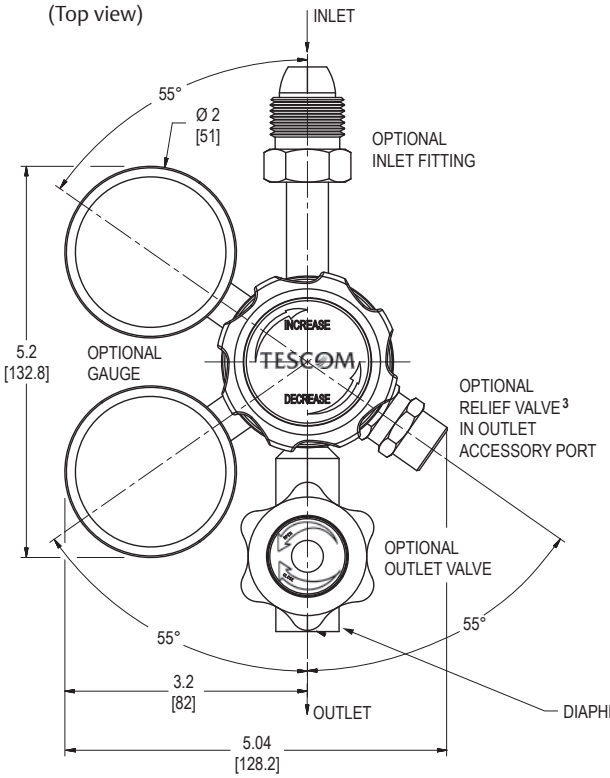

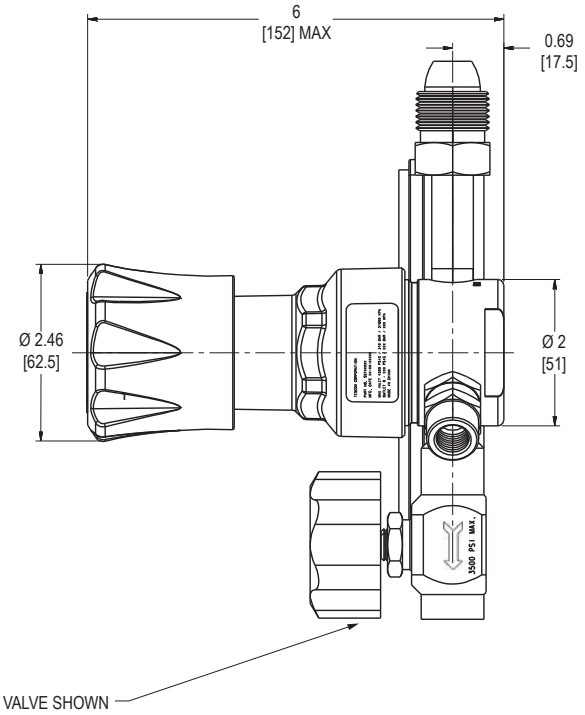

4 Ports
(Top view)

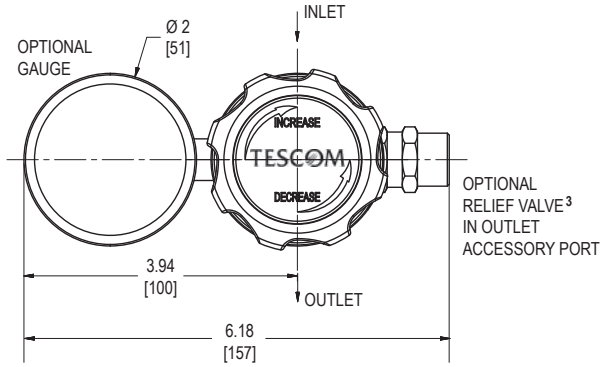

Bottom Mounting

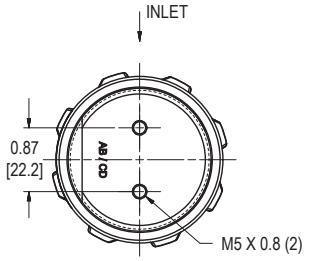

All dimensions are reference & nominal
Metric [millimeter] equivalents are in brackets

EMERSON
Process Management

SG1 Series Regulator Flow Charts

For more information on how to read flow curves, please refer to the Flow Curves and Calculations document (debul2007x012) in the TESCOM catalog or on www.tescom.com.

C_V = 0.06 Model

Metal Diaphragm

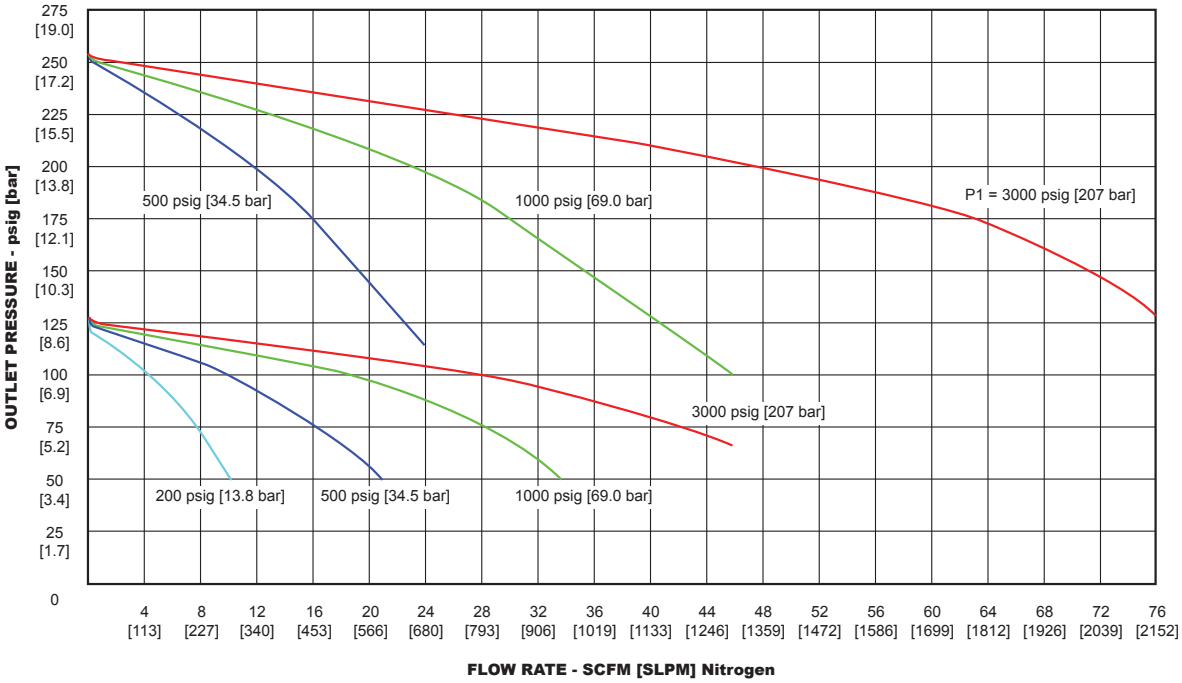

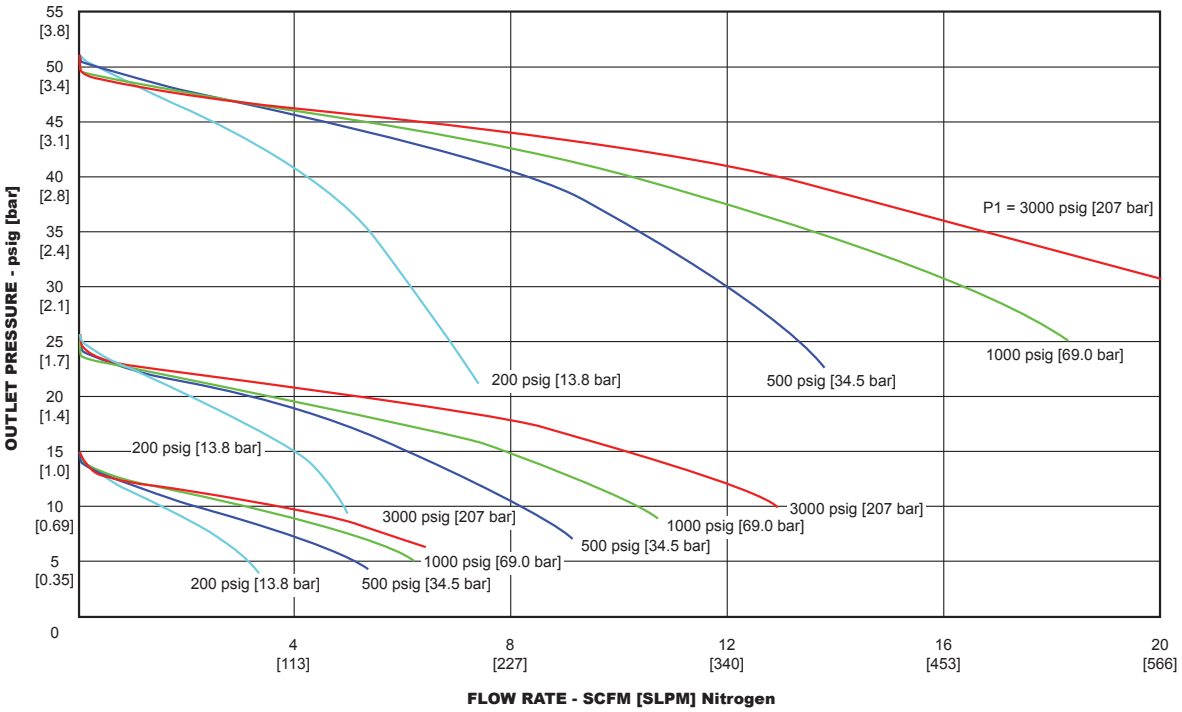

TESCOM

SG1 Series Regulator Flow Charts

For more information on how to read flow curves, please refer to the Flow Curves and Calculations document (debul2007x012) in the TESCOM catalog or on www.tescom.com.

C_V = 0.06 Model

Neoprene Diaphragm

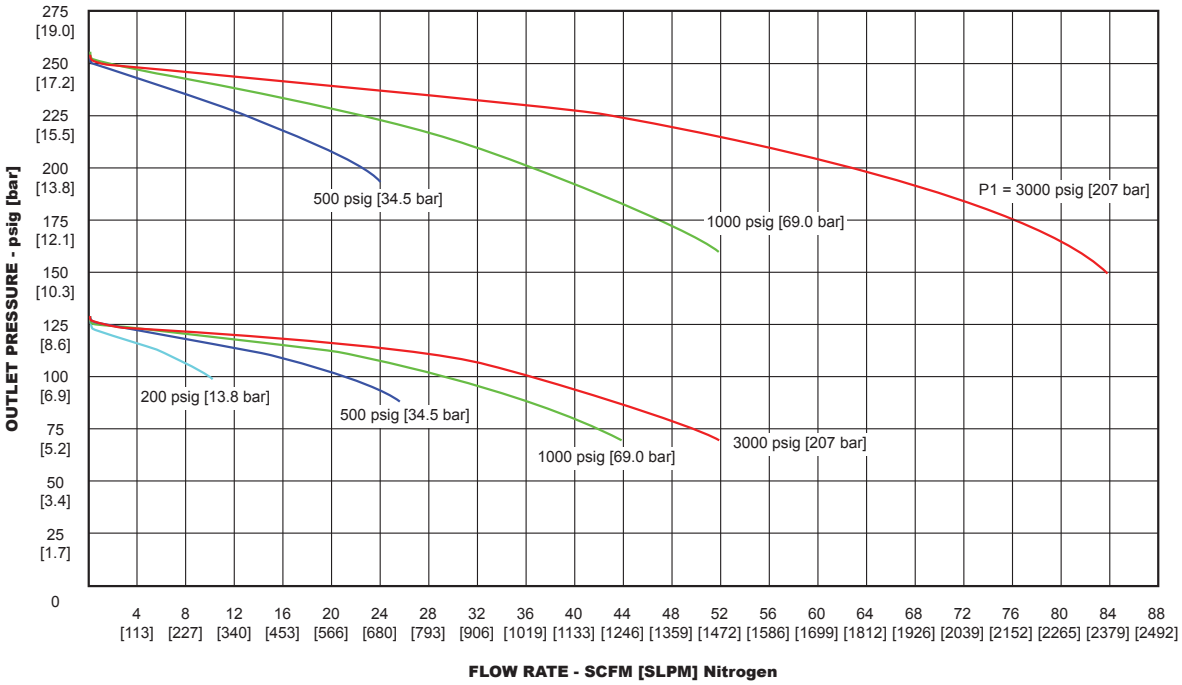

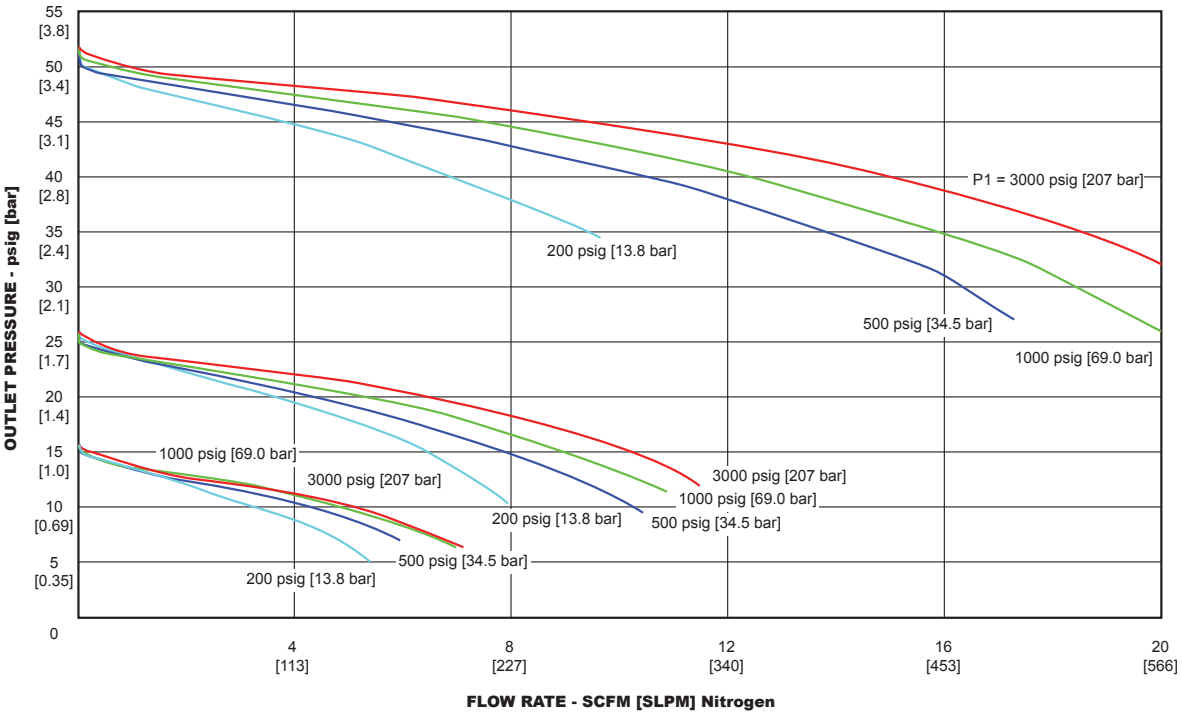

EMERSON
Process Management

SG1 Series Regulator Flow Charts

For more information on how to read flow curves, please refer to the Flow Curves and Calculations document (debul2007x012) in the TESCOM catalog or on www.tescom.com.

C_V = 0.20 Model

Metal Diaphragm

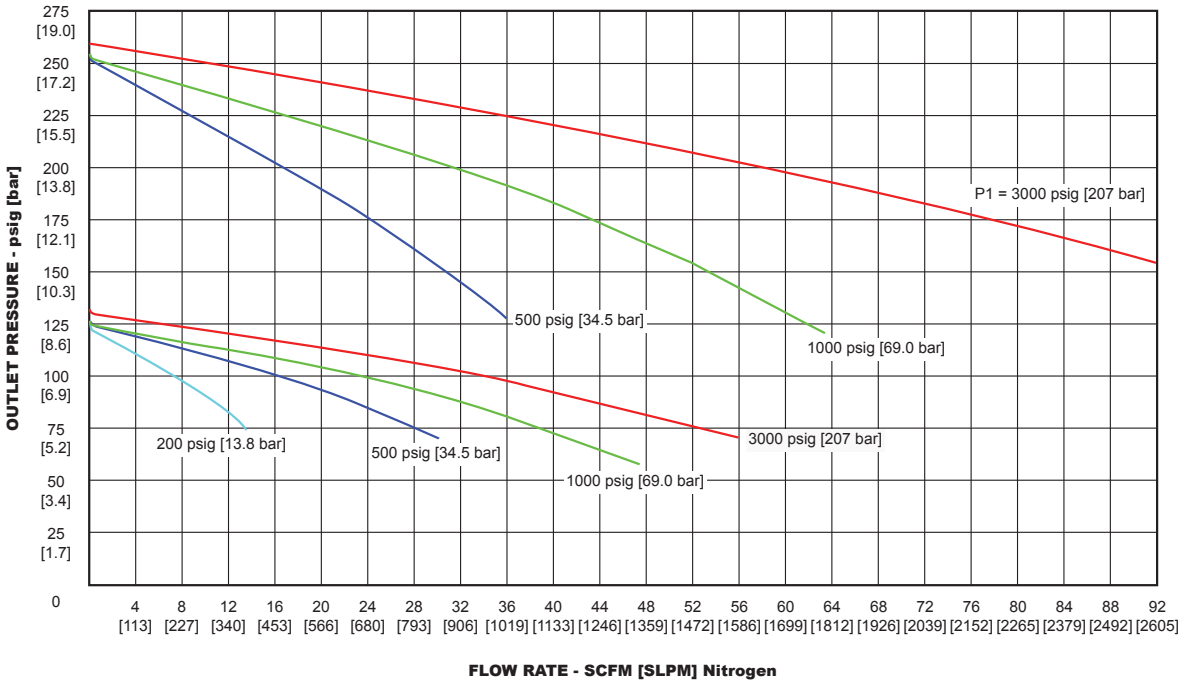

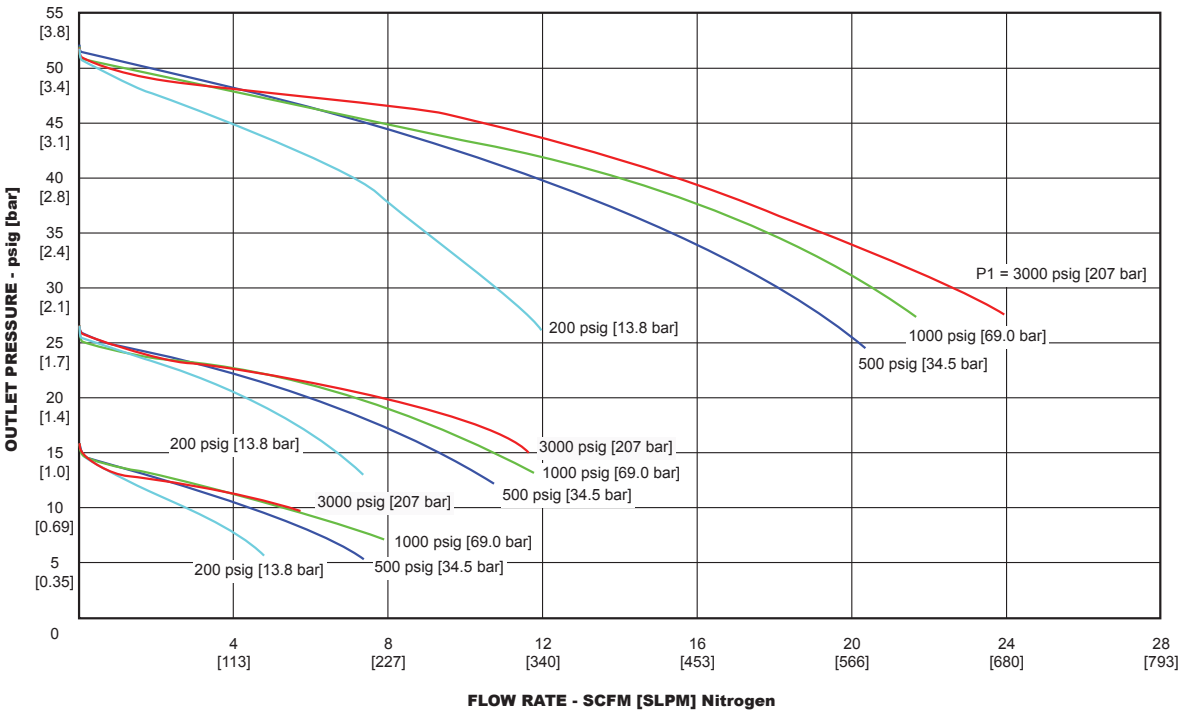

TESCOM

SG1 Series Regulator Flow Charts

For more information on how to read flow curves, please refer to the Flow Curves and Calculations document (debul2007x012) in the TESCOM catalog or on www.tescom.com.

C_V = 0.20 Model

Neoprene Diaphragm

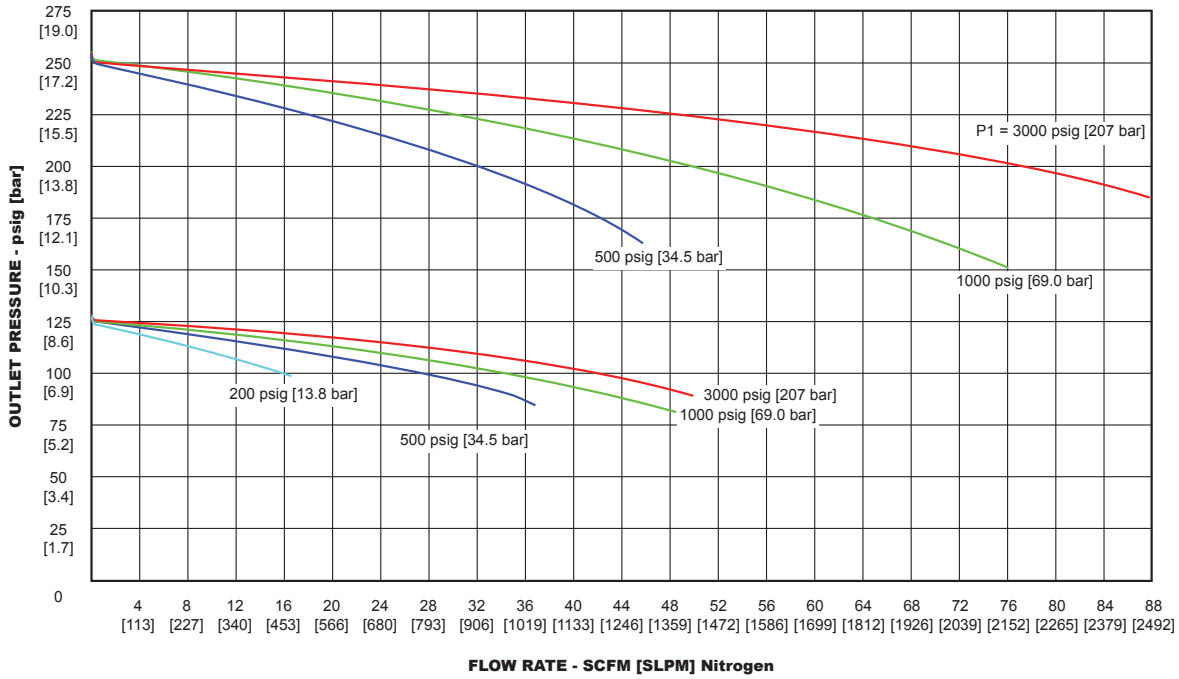

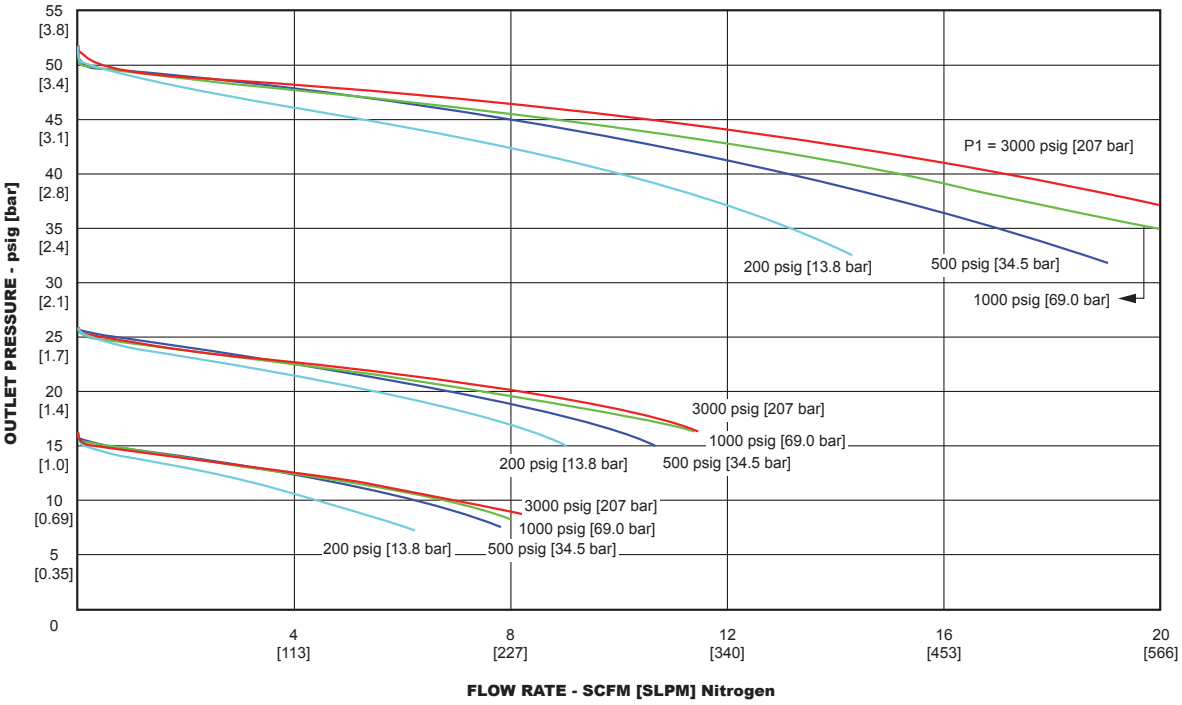

EMERSON
Process Management

SG1 Series Regulator Part Number Selector

Repair Kits, Accessories & Modifications may be available for this product. Please contact TESCOM for more information.

Base Model

Example for selecting a part number:

SG1	6	3	1		4	1		[Blank]
BASIC SERIES	**BODY MATERIAL**	**OUTLET PRESSURE RANGES**	**DIAPHRAGM MATERIAL**	**SEAL MATERIAL**	**PORTS (TOP VIEW)**	**FLOW C_V**	**P1**	**SEAT MATERIAL**
SG1	**P –** Nickel-Plated Brass **6 –** 316L Stainless Steel	**1 –** 15 psig / 103 kPa / 1.0 bar[1] **2 –** 25 psig / 172 kPa / 1.7 bar **3 –** 50 psig / 345 kPa / 3.4 bar **4 –** 125 psig / 862 kPa / 8.6 bar **5 –** 250 psig / 1724 kPa / 17.2 bar	**1 –** 316L Stainless Steel **2 –** Neoprene	Teflon® Buna-N	**4 –** 4 port OUTLET INLET **5 –** 5 port OUTLET INLET	**1 –** 0.06 **2 –** 0.2	4500 psig 31,026 kPa 310 bar 3000 psig 20,684 kPa 207 bar	**[Blank] –** PCTFE **V –** Polyimide[2]

1. Consider a two-stage regulator (SG2) if using full range of inlet pressure capabilities
2. Per ASTM D 6456-99 Type II Class 1M (Meldin® 7021 or Vespel® SP-21)

Accessories

Extension to base model part number:

SG1XXXXXX	—	06	A	1	A
BASE MODEL NUMBER		**CYLINDER CONNECTIONS**	**GAUGES[4]**	**RELIEF VALVE[3]**	**OUTLET VALVE**
		00 – None **01 –** CGA 296 **02 –** CGA 350 **C1 –** CGA 510 **03 –** CGA 540 **04 –** CGA 580 **05 –** CGA 590 **06 –** DIN 477-1.1 **07 –** DIN 477-1.3 **08 –** DIN 477-1.5 **09 –** DIN 477-1.6 **10 –** DIN 477-1.7 **11 –** DIN 477-1.8 **12 –** DIN 477-1.9 **13 –** DIN 477-1.10 **14 –** DIN 477-1.14 **15 –** DIN 477-5.54 **16 –** DIN 477-5.57 **17 –** DIN 477-5.59 **18 –** BS 341 (2002) #01 **19 –** BS 341 (2002) #02 **20 –** BS 341 (2002) #03 **21 –** BS 341 (2002) #04 **23 –** BS 341 (2002) #06 **24 –** BS 341 (2002) #07 **25 –** BS 341 (2002) #08 **27 –** BS 341 (2002) #10 **28 –** BS 341 (2002) #11 **30 –** BS 341 (2002) #13 **31 –** BS 341 (2002) #14 **32 –** BS 341 (2002) #15	**0 –** None **P –** Plug(s) **A –** psi / kPa **B –** bar / psi	**A –** None **P –** Plug **1 –** Teflon® Pipe-away	**0 –** None **A –** Diaphragm valve **B –** Needle valve

Note: Cylinder connections are available in all world areas.

3. The relief valve is not intended to be a "Pressure Relief Device" as defined by ASME Boiler & Pressure Vessel Code - Section VIII, nor is it intended to be a "Safety Accessory" or "Pressure Limiting Device" as defined by the Pressure Equipment Directive (97/23/EC). The relief valve is intended to indicate a potential problem with the regulator and prevent further damage to the regulator. The relief valve is not intended to protect the downstream process equipment.

[4]GAUGE PRESSURE RANGES

OUTLET PRESSURE RANGE	OUTLET GAUGE PRESSURE RANGE
SG1X1XXXX – 15 psig / 103 kPa / 1.0 bar	0-30 psig / 200 kPa / 2 bar
SG1X2XXXX – 25 psig / 172 kPa / 1.7 bar	0-30 psig / 200 kPa / 2 bar
SG1X3XXXX – 50 psig / 345 kPa / 3.4 bar	0-60 psig / 400 kPa / 4 bar
SG1X4XXXX – 125 psig / 862 kPa / 8.6 bar	0-160 psig / 1100 kPa / 11 bar
SG1X5XXXX – 250 psig / 1724 kPa / 17.2 bar	0-300 psig / 2000 kPa / 20 bar
INLET PRESSURE RANGE	**INLET GAUGE PRESSURE RANGE**
All	6000 psig / 41,000 kPa / 400 bar

SG1 Series Rebuild Kits

Rebuild Kits include replacement cartridges, diaphragms, diaphragm seals, lubrication and instruction sheet.

KIT PART NUMBER	FOR SG PART NUMBER
JT389-8927	SG1PX1X1
JT389-8928	SG1PX1X2
JT389-8929	SG1PX2X1
JT389-8930	SG1PX2X2
JT389-8931	SG16X1X1
JT389-8932	SG16X1X2
JT389-8933	SG16X2X1
JT389-8934	SG16X2X2
JT389-8927V	SG1PX1X1V
JT389-8928V	SG1PX1X2V
JT389-8929V	SG1PX2X1V
JT389-8930V	SG1PX2X2V
JT389-8931V	SG16X1X1V
JT389-8932V	SG16X1X2V
JT389-8933V	SG16X2X1V
JT389-8934V	SG16X2X2V

WARNING! Do not attempt to select, install, use or maintain this product until you have read and fully understood the *TESCOM Safety, Installation and Operation Precautions.*

DSG012031X012 © 2013 Emerson Process Management Regulator Technologies, Inc. All rights reserved. 05/2013.
Tescom, Emerson Process Management, and the Emerson Process Management design are marks of one of the Emerson Process Management group of companies. All other marks are the property of their respective owners.

EMERSON
Process Management

www.tescom.com