Bristol

Bristol® 2808-35B

Low Power Differential Pressure Transmitter

Emerson Process Management offers the best solution to your process measurement and control needs. The low power Bristol® Series 2808 Transmitter provides the ease of installation, use, and external field calibration adjustments. Model 2808-35B is a reliable, compact pressure transmitter designed to accurately measure and provide a fast response to differential pressure. In addition, the 35B has better common mode pressure rejection than most smart sensors. Many applications include high speed control of compressors, pneumatic control systems and pressure sensor calibration system control as well as many traditional industrial and process control systems.

The low power 35B is user-configurable for a 1-5V or 4-20mA output proportional to input pressure. For battery and solar powered systems, the 35B produces a 1-5V output drawing only 2.2mA with an operating voltage as low as 6 Vdc. In the current mode, a 4-20mA output will drive a 250 ohm load with only a 12Vdc power source. This low power feature is especially ideal for low power RTUs such as Emerson's Bristol 3530 Solar Power TeleRTU. For other applications, the output signal can be supplied to the input of a recorder, indicator or similar device.

The 35B has an adjustable range that is calibrated at the factory to a specific measurement range. Input ranges covering 17 in$H_2$0 through 300 PSID are available. Field adjustments can be performed via external fine gain and fine offset adjustments. Internal coarse settings allow the user to determine the coarse span and zero elevation/suppression range capability. An optional mounting bracket can be specified for vertical and horizontal pipe mounting.

Operation

The sensor module provides the process connections. These connections expose one side of the process diaphragms to the high and low pressure respectively. The 35B contains a micromachined transduction element, fabricated using integrated circuit technology, to sense input pressure. This sensing technology combines the mechanical aspects of silicon, which is literally as strong as steel and hysteresis free, with the inherent semiconductor and electronic properties of an integrated circuit. The sensor consists of an internal silicon diaphragm into which piezoresistive strain gauge resistors are implanted, then interconnected to form a pressure sensitive Wheatstone bridge. The outer process diaphragms are hydraulically connected to the silicon diaphragm using a suitable fill fluid. When the sensor is energized, by applying pressure to the process diaphragms, the silicon diaphragm deflects proportionally to the differential pressure, resulting in an electrical output change proportional to the input differential pressure. Because of the single crystal nature of the silicon diaphragm, linearity is excellent and pressure hysteresis is essentially immeasurable.

Features

- Adjustable ranges
- Excellent accuracy
- Low power consumption
- Explosion-proof electronic housing
- Local indicator option, linear or in engineering units
- Fast response

Functional Specifications

Service

- Liquid, gas or vapor

Input ranges

Min.	-	Max. Span	Max. Working Press. (PSI)
0-17	to	0-100 in$H_2$0	2000
0-50	to	0-300 in$H_2$0	2000
0-4.2	to	0-25 PSID	2000
0-17	to	0-100 PSID	2000
0-50	to	0-300 PSID	2000

Current Loop Mode

- Supply Voltage:
  24V dc nominal
  6.0V dc minimum at transmitter
  8V dc minimum with Local Digital Indicator option
  42.5V dc maximum at transmitter
  Reverse polarity protected
- Output:
  Two wire analog, 4-20 mA proportional to pressure or level
  Current limited: 24 mA maximum
  Minimum current: 2 mA

The maximum loop resistance can be determined as follows:

$$\text{R-loop maximum} = \frac{\text{Vsupply-6 ohms}}{0.02}$$

The maximum load capacitance is at least 0.1uF

Voltage Mode

- Supply Voltage:
  6-42.5 Vdc
  Reverse polarity protected to 90 Vdc
- Supply Current:
  2.2mA nominal
- Output into resistive load (maximum cap. load 5nF):
- 1-5 Vdc (3-wire)

Calibration Adjustments

- Span Adjustment:
  Adj. range is 16 to 100% URL (6:1 turndown)
  Coarse Span set by Rotary switch
  Fine Span set by 15-turn potentiometer
- Zero Adjustment:
  Adj. range is –600 to 600% LRL for elevation and suppression.
  Coarse Zero provided by DIP switch selections.
  Fine Zero set via 15-turn potentiometer.

Response Time & Damping

- Time Constant:
  (Time required for 63% change in output with a 100% input change)

Damping Out	Damping In
10 ms	50 ms

- Recovery:
  Time to steady output after application of 24 volt supply with constant pressure is 100 ms maximum (With No Damping):
  10 ms

- Damping:
  User selectable by jumper circuit
  Damping OFF = approx.10 ms max
  Damping ON = .05 sec ±25% time constant

Reverse Pressure

- On low-range models, full reverse pressure can represent an appreciable percentage of URL. If on those models, calibration contains 50% of zero elevation, non-linearity errors can be as high as ±1%.

Overpressure Effect

- ±0.1% URL at maximum operating pressure

Static Pressure Effect on DP Zero

- ± 1% of URL/1000 PSI

Static Pressure Effect on DP Span

- ± 1% of reading/1000 psi

Performance Specifications

- **Accuracy**
  ±0.15% of calibrated span
  Includes the combined effects of independent linearity, hysteresis, and repeatability
- **Stability**
  At constant conditions. ±0.1% of URL/yr typical; ±0.25% of URL/yr max
- **Temperature Effect – Total (Includes Zero and Span)**
  ±0.015% of URL per °F from –25 to 75°F
  ±0.010% of URL per °F from 75 to 185°F
  ±0.020% of URL per °F on 100 in H_20 only
- **Power Supply Effect**
  ±0.005% of upper range limit per volt change
- Ripple and Noise
  In accordance with ISA 50.1, Section 4.6
- Mounting Position Effect on Transmitter Accuracy
  ±2 in H_20 which can be corrected by calibration

Environmental Specifications

Temperature Limits

- Wet End:
  -40° to 220°F (-40° to 104°C)
- Amplifier:
  -25° to 185°F (-32° to 85°C)
- Storage:
  -40° to 212°F (-40° to 100°C)
  *The maximum permissible temperature inside the enclosure (irrespective of sensor temperature) is 185°F (85°C) for the amplifier board.
- **Optional Local Indication**
  Operating: -30°C to +80°C
  Storage: -40°C to +80°C
- **Humidity Limits (cover in place)**
  15 to 95% RH @ 185°F (85°C)

EMI Effect

- ±0.1% of upper range limit @ 3V/M from 20 to 1000 MHz
- Meets /SAMA PMC-33-1C with transmitter cover in place and all wiring contained in grounded conduit.

Surge Protection

- Bipolar, differential surge
- 1000 watts for 1 ms – without local indicator
- May be used with purchased surge protector for additional protection (for non-hazardous, non-approved installations only).

Vibration Effect

Less than ±0.1% of URL for 10 to 500 Hz at 1 g on any axis.

Hazardous Locations:

- Explosion-proof for Class 1, Division 1, Groups C & D without conduit seals
- Class 1, Division 2 non-incendive

Physical Specifications

- Diaphragm material
  316 Stainless Steel, Hastelloy C
- Process flange
  316 Stainless Steel, Hastelloy C
- **Flange bolt material**
  316 Stainless Steel
- Manifold
  Stainless Steel, Hastelloy C
- **Fill Medium**
  DC 200 Silicone oil
- **Process connections**
  ¼" NPT conduit connection
  ½" NPT with connection blocks
- Electrical connections
  ½" NPT conduit connection with internal field wiring terminals
- **Housing material and rating**
  Low copper aluminum, epoxy finish, NEMA 4X
- Optional Local Indication
  4-1/2 Digit User-Connfigurable LCD Meter:
  Linear (0 to 100%), or in engineering units
  Polarity: Automatic (-) displayed
- **Weight**
  Standard: 6.36 lbs.
  With meter option: 6.5 lbs.

Model Number: 2808-35B - A B - C - D - E - F - G - H - J - K - L - M - N

2808-35B

SELECT	DESCRIPTION		CODE
A B	**INPUT PRESSURE RANGE** **Min. Span - Max. Span (URL)**	**280835BASE**	**A B**
(10)	0-17 to 0-100" H_2O		13
	0-50 to 0-300" H_2O		14
	0-4.2 to 0-25 psi		20
	0-17 to 0-100 psi		22
	0-50 to 0-300 psi		23
C	**OUTPUT SIGNAL (Default - 4-20 mA output)**		**C**
(20)	Linear	**Add note to configure for 1-5V output**	1
D	**DIAPHRAGM MATERIAL**		**D**
(30)	316 Stainless Steel	**X3508DIAPH**	1
	Hastelloy C		2
E	**FILLING MEDIA**		**E**
(40)	DC 200 Silicone Fluid	**XTRANSFILL**	1
F	**FLANGE MATERIAL**	**X2808FLA**	**F**
(50)	316 Stainless Steel	**Diaphragm Mat'l (option 'D')**	1
	Hastelloy C	**and Flange Material**	2
	316 Stainless Steel	**Must Be the Same**	3
	(For Remote Seals Only)		
G	**MANIFOLD ADAPTER (FOOTBALLS)**		**G**
(60)	None	**X2808FB**	0
	316 Stainless Steel	**Must Match**	1
	Hastelloy C	**Flange Material**	2
H	**INDICATION**		**H**
(70)	None	**XTRANSIN**	0
	Local Digital Indication (Linear)		1
J	**FLANGE ORIENTATION**		**J**
(80)	Standard		1
	90 Degrees Down		2

Model Number: 2808-35B - A B - C - D - E - F - G - H - J - K - L - M

2808-35B

SELECT	DESCRIPTION		CODE
K	**MOUNTING BRACKET**	**X2808MT**	**K**
(90)	Without Mounting Bracket		0
	With Flange Mounted Bracket	**Option J must equal 1**	1
	With Neck Mounted Bracket		2
L	**CERTIFICATION**		**L**
(100)	UL/CUL		1
	CENELEC	**Not Avail. w/Indication**	2
	Omega		3
M	**WARNING PLATE**		**M**
(110)	Not Applicable		0
	Russian	**Not Avail. w/Indication**	1

Physical Dimensions

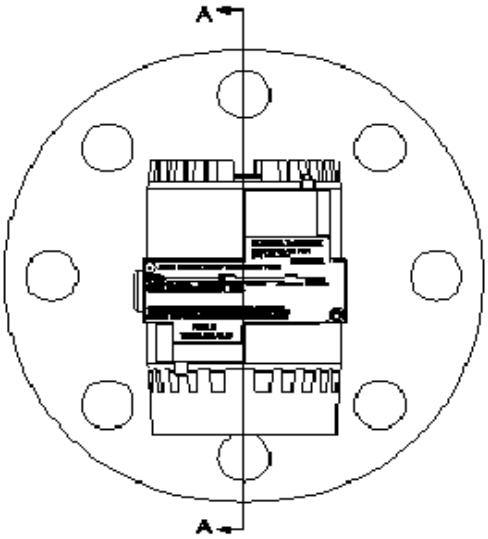

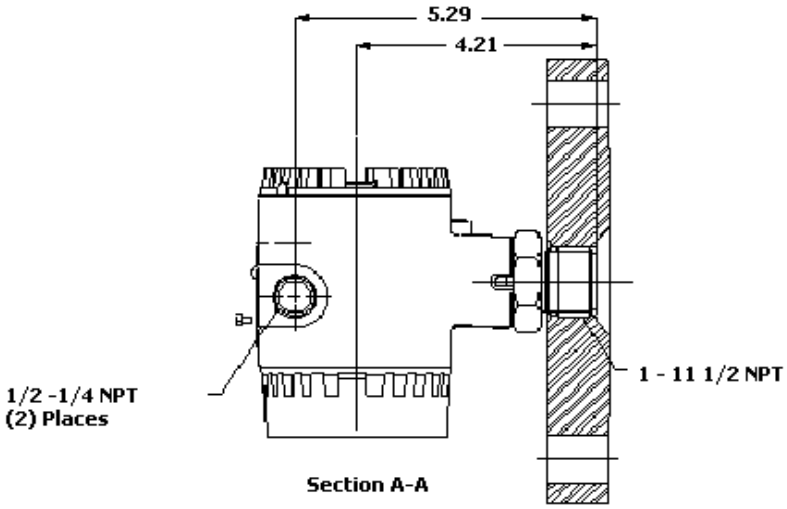

Physical Dimensions

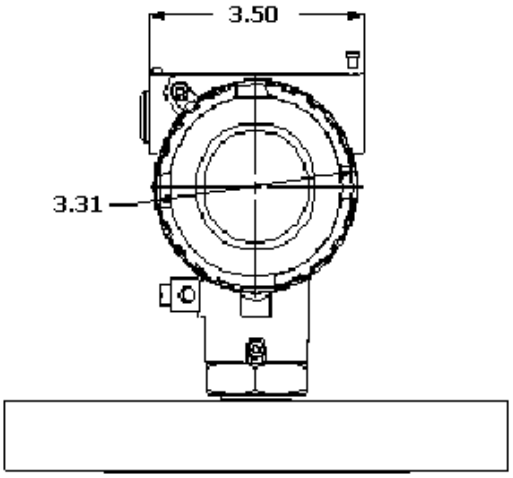

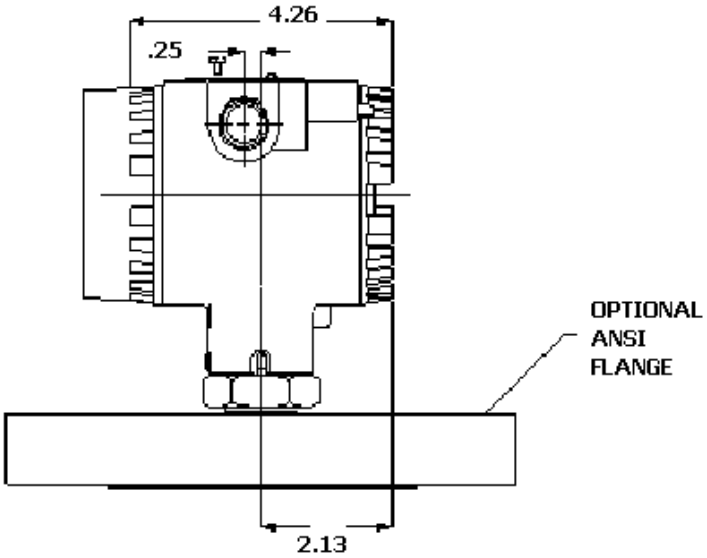

© 2007 Remote Automation Solutions, division of Emerson Process Management. All rights reserved.

Bristol, Inc., Bristol Babcock Ltd, Bristol Canada, BBI SA de CV and the Flow Computer Division , are wholly owned subsidiaries of Emerson Electric Co. doing business as Remote Automation Solutions ("RAS"), a division of Emerson Process Management. FloBoss, ROCLINK, Bristol, Bristol Babcock, ControlWave, TeleFlow and Helicoid are trademarks of RAS. AMS, PlantWeb and the PlantWeb logo are marks of Emerson Electric Co. The Emerson logo is a trademark and service mark of the Emerson Electric Co. All other marks are property of their respective owners.

The contents of this publication are presented for informational purposes only. While every effort has been made to ensure informational accuracy, they are not to be construed as warranties or guarantees, express or implied, regarding the products or services described herein or their use or applicability. RAS reserves the right to modify or improve the designs or specifications of such products at any time without notice. All sales are governed by RAS' terms and conditions which are available upon request. RAS does not assume responsibility for the selection, use or maintenance of any product. Responsibility for proper selection, use and maintenance of any RAS product remains solely with the purchaser and end-user.

Emerson Process Management
Remote Automation Solutions

Watertown, CT 06795 USA T 1 (860) 945-2200
Mississauga, ON 06795 Canada T 1 (905) 362-0880
Worcester WR3 8YB UK T 44 (1) 905-856950