Fisher™ 249 Caged Displacer Sensors

Contents

Introduction 1
Scope of Manual 1
Description 2
Type Number Description 3
Educational Services 4
Maintenance 4
Cleaning the Cage 5
Removing the Displacer and Stem 6
Replacing the Displacer, Cotter Spring, Stem End Piece, and Displacer Spud 7
Replacing the Displacer Rod/Driver Assembly 8
Replacing the Torque Tube 9
Changing Cage Head Position 10
Replacing the Torque Tube Arm and Changing the Mounting 11
Simulation of Process Conditions for Calibration of Fisher Level Controllers and Transmitters 12
Related Documents 12
Parts Ordering 12
Parts Kits 13
Parts List 13

Figure 1. Fisher 249B Sensor with 2500 Controller

Introduction

Scope of Manual

This instruction manual includes maintenance and parts ordering information for 249 caged sensors.

Although a 249 sensor is usually shipped with attached controller or transmitter, this manual does not include operation, installation, calibration, maintenance, and parts ordering information for the controller/transmitter or for the complete unit. For this information, refer to the appropriate controller/transmitter instruction manual.

Note

Caged sensors have a rod and block shipping lock installed on each end of the displacer to protect the displacer in shipping, as shown in figure 2. Remove these parts before installing the sensor to allow the displacer to function properly.

Do not install, operate or maintain a 249 sensor without being fully trained and qualified in valve, actuator, and accessory installation, operation, and maintenance. **To avoid personal injury or property damage, it is important to**

carefully read, understand and follow all the contents of this manual, including all safety cautions and warnings. If you have any questions about these instructions, contact your Emerson sales office or Local Business Partner before proceeding.

Description

249 sensors are designed to measure liquid level, interface level, or density/specific gravity inside a vessel.

A torque tube assembly (figure 3) and displacer provide an indication of liquid level, interface level, or density/specific gravity. The torque tube assembly consists of a hollow torque tube with a shaft welded inside it at one end and protruding from it at the other end.

Figure 2. Rod and Block Shipping Lock

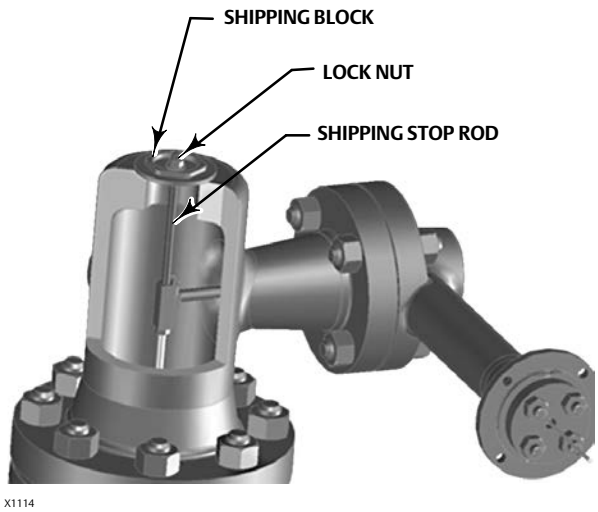

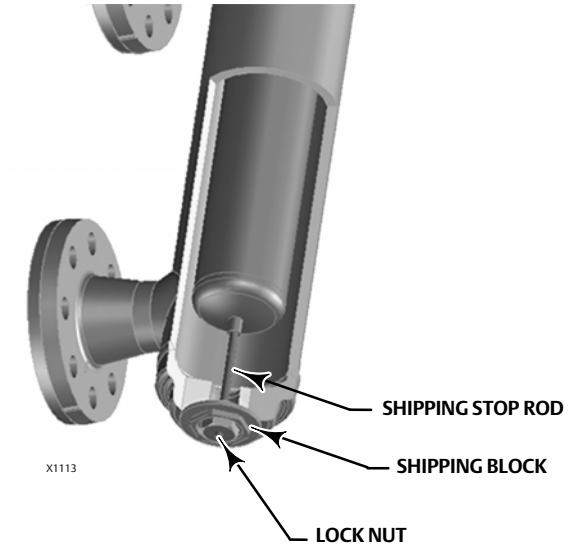

Figure 3. Typical Caged Displacer

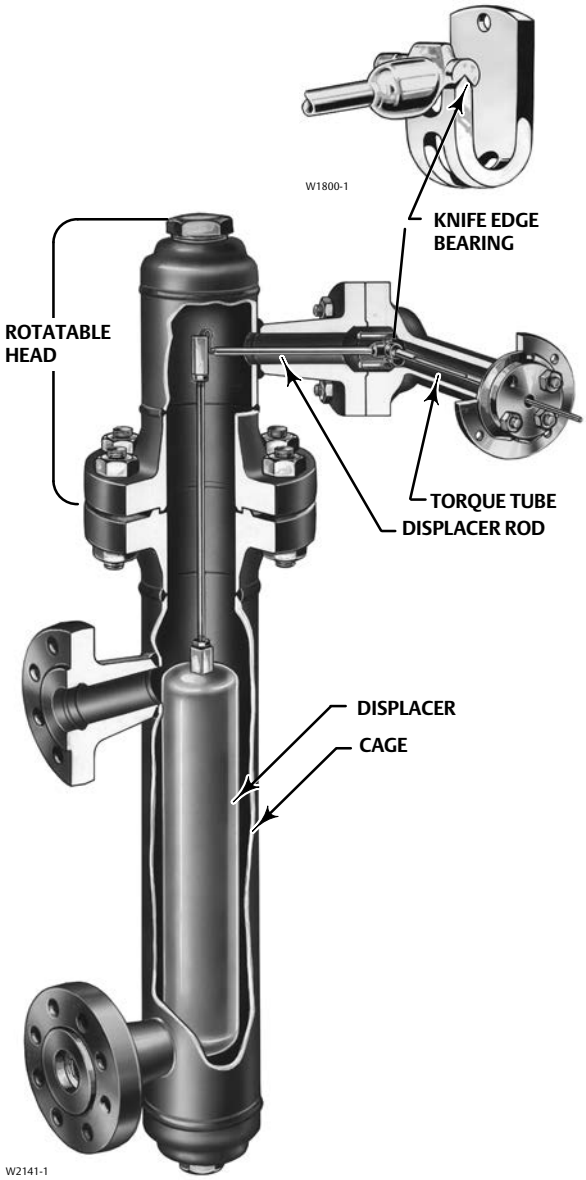

The unconnected end of the tube is sealed by a gasket and clamped rigidly to the torque tube arm, permitting the protruding end of the shaft to twist and therefore transmit rotary motion. This allows the interior of the torque tube to remain at atmospheric pressure, thus eliminating packing and the disadvantages of packing friction.

The displacer always exerts a downward force on one end of the displacer rod. The other end of the displacer rod rests on the knife-edge of the driver bearing. A keyed shaft on the bearing end of the displacer rod fits into a socket on the outside of the welded end of the torque tube assembly.

A change in liquid level, interface level, or density/specific gravity buoys up the displacer by a force equal to the weight of the liquid displaced. Corresponding vertical movement of the displacer results in angular movement of the displacer rod around the knife edge. Since the torque tube assembly is a torsional spring which supports the displacer and determines the amount of movement of the displacer rod for a given displacement change, it will twist a specific amount for each increment of buoyancy change. This rotation is brought through the torque tube arm by the protruding rotary shaft. A controller or transmitter attached to the end of the rotary shaft converts the rotary motion into varying pneumatic or electric signals. Figure 4 shows how the controller or transmitter mounts on the torque tube arm.

Unless otherwise noted, all NACE references are to NACE MR0175-2002.

Figure 4. Torque Tube Arm Exploded View Showing Controller or Transmitter Mounting

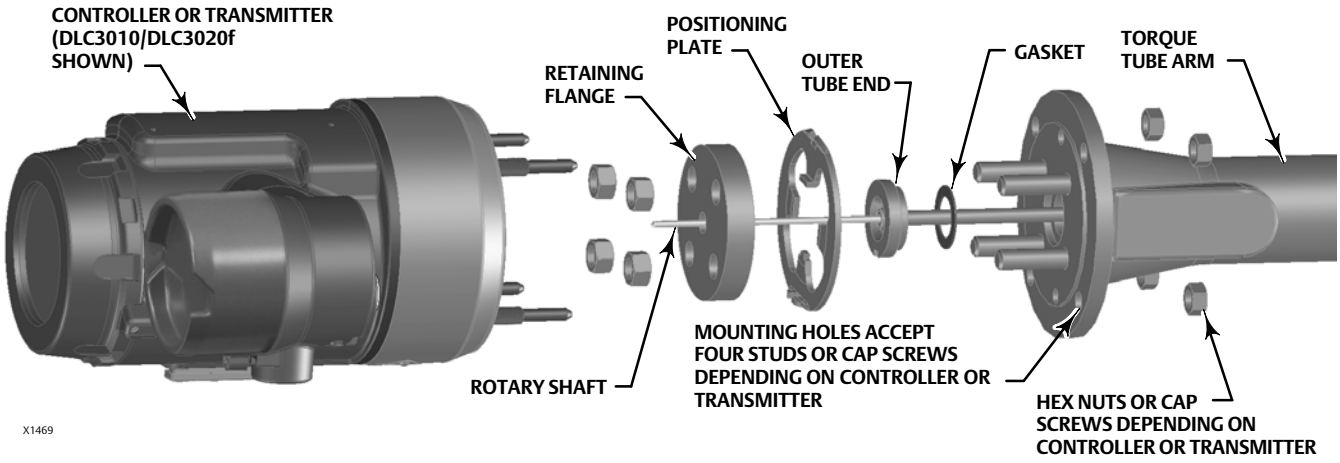

Type Number Description

- **249**—CL125 or 250 cast iron cage with screwed or flanged connections.
- **249B**—CL150, 300, or 600 steel cage with screwed or flanged connections.
- **249BF**—CL150, 300, or 600 cast steel or stainless steel cage with flanged connections only. Available from Emerson Automation Solutions in Europe only.
- **249C**—CL150, 300, or 600 stainless steel cage with screwed or flanged connections.
- **249K**—CL900 or 1500 steel cage with flanged connections only.
- **249L**—CL2500 steel cage with flanged connections only.

The cage head on all of the 249 constructions may be rotated to any of the eight alternate positions shown in figure 7. Connection sizes are either NPS 1-1/2 or 2.

The Parts List section shows some 249 sizes by construction, standard displacer lengths, and standard materials and table 1 contains displacer and torque tube materials. However, 249 parts are available in a wide variety of materials of construction, part dimensions, and other specifications. Contact your Emerson sales office or Local Business Partner for assistance in selection of specific materials, dimensions, and specifications.

Table 1. Displacer and Torque Tube Materials

Part	Standard Material	Other Materials
Displacer	304 Stainless Steel	316 Stainless Steel, N10276, N04400, Plastic, and Special Alloys
Displacer Stem, Driver Bearing, Displacer Rod and Driver	316 Stainless Steel	N10276, N04400, other Austenitic Stainless Steels, and Special Alloys
Torque Tube	N05500(1)	316 Stainless Steel, N06600, N10276
1. N05500 is not recommended for spring applications above 232°C (450°F). Contact your Emerson Automation Solutions sales office or application engineer if temperatures exceeding this limit are required.		

Educational Services

For information on available courses for 249 displacer sensors, as well as a variety of other products, contact:

Emerson Automation Solutions
Educational Services, Registration
Phone: +1-641-754-3771 or +1800-338-8158
e-mail: education@emerson.com
http://www.emerson.com/en-us/automation/services-consulting/educational-services

Maintenance

Sensor parts are subject to normal wear and must be inspected and replaced as necessary. The frequency of inspection and replacement depends upon the severity of service conditions.

⚠ WARNING

Always wear protective clothing, gloves, and eyewear when performing any installation operations to avoid personal injury.

Avoid personal injury or property damage resulting from the sudden release of pressure. Before performing any maintenance procedure:

- **Relieve any process pressure in the vessel where the 249 sensor is installed.**
- **Drain the process liquid from the vessel.**
- **Shut off any electrical or pneumatic input to the controller or transmitter attached to the 249 sensor and vent any pneumatic supply pressure.**
- **Use caution when loosening flange bolting (key 22) or pipe plugs (key 17, 26, or 27).**
- **Remove the controller or transmitter from the torque tube arm (key 3).**

Before continuing with any maintenance procedure, be sure the cage (key 1) is also free of process pressure and/or liquid. Use caution when loosening flange bolting (key 22) or pipe plugs (key 17, 26, or 27).

Before performing any maintenance procedure requiring the handling of the displacer, inspect the displacer (key 10) to make sure process pressure or liquids have not penetrated the displacer.

The displacer in this unit is a sealed container. If penetrated by process pressure or liquid, the displacer may hold pressure or hazardous liquid for an extended period. A displacer that has been penetrated by process pressure or liquid may contain:

- **pressure as a result of being in a pressurized vessel**
- **liquid that becomes pressurized due to a change in temperature**
- **liquid that is flammable, hazardous or corrosive**

Sudden release of pressure, contact with hazardous liquid, fire, or explosion, which might result in personal injury or property damage, can occur if a displacer that is retaining pressure or process liquid is punctured, subjected to heat, or repaired.

Handle the displacer with care. Consider the characteristics of the specific process liquid in use.

Check with your process or safety engineer for any additional measures that must be taken to protect against process media.

Note

Except for gaskets (keys 13 and 14), trouble symptoms peculiar to specific parts are discussed in the following sections. Each section is specific to these parts. Regardless of location, gasket failure is indicated by leakage in the gasket area. Every time a gasket is removed, replace it with a new one upon reassembly.

The procedures below apply to all sensor types except where indicated. Key numbers used are shown in the following illustrations:

249—figure 8

249B—figure 9

249C—figure 10

249K—figure 11

249L—figure 12

Cleaning the Cage

Process residue buildup in the bottom of the cage (key 1) or at the connections may restrict flow in and out of the cage or interfere with displacer motion. Remove the cage to clean out process residue buildup.

1. Before starting any maintenance procedure, be sure the following safety actions have been completed.
   - Relieve process pressure in the vessel where the 249 sensor is installed.
   - Drain the process liquid from the vessel.
   - Shut off any electrical or pneumatic input to the controller or transmitter attached to the 249 sensor and vent any pneumatic supply pressure. Remove the controller or transmitter from the torque tube arm (key 3). Take care not to damage the torque tube assembly (key 9) inside the torque tube arm.
   - Be sure the cage is also free of process pressure and/or liquid. Use caution when loosening flange bolting (key 22) or pipe plugs (keys 17, 26, or 27).
   - Be sure process pressure or liquids have not penetrated the displacer (key 10).
2. Properly support the cage head (key 2) and the torque tube arm. Remove the cap screws or stud bolts (key 21) and hex nuts (key 22) that hold the cage head to the cage.

CAUTION

When removing a sensor from a cage, the displacer may remain attached to the displacer rod and be lifted out with the cage head when the cage head is removed. If separating the displacer and displacer rod before removing the cage head, remove the cotter spring (key 11).

Be careful not to let the displacer slip and drop into the bottom of the cage, as displacer damage could result.

3. Carefully remove the cage head and lift out the displacer.
4. A style 1 or 4 (screwed or flanged) cage must be disconnected at the lower connection and the liquid damper (key 29) removed. Remove the damper by prying it out of a flanged connection or by unscrewing it from a screwed connection with a 1/2-inch hex (Allen) wrench. If necessary, completely remove the style 4 cage from the vessel.
5. For complete drainage and cleaning of a cage with style 2 or 3 (screwed or flanged) connections (figure 5), remove the pipe plug (keys 17 or 26) from the bottom of the cage. Remove the liquid damper (key 29). If necessary, completely remove the cage from the vessel.

Figure 5. Cage Connection Styles

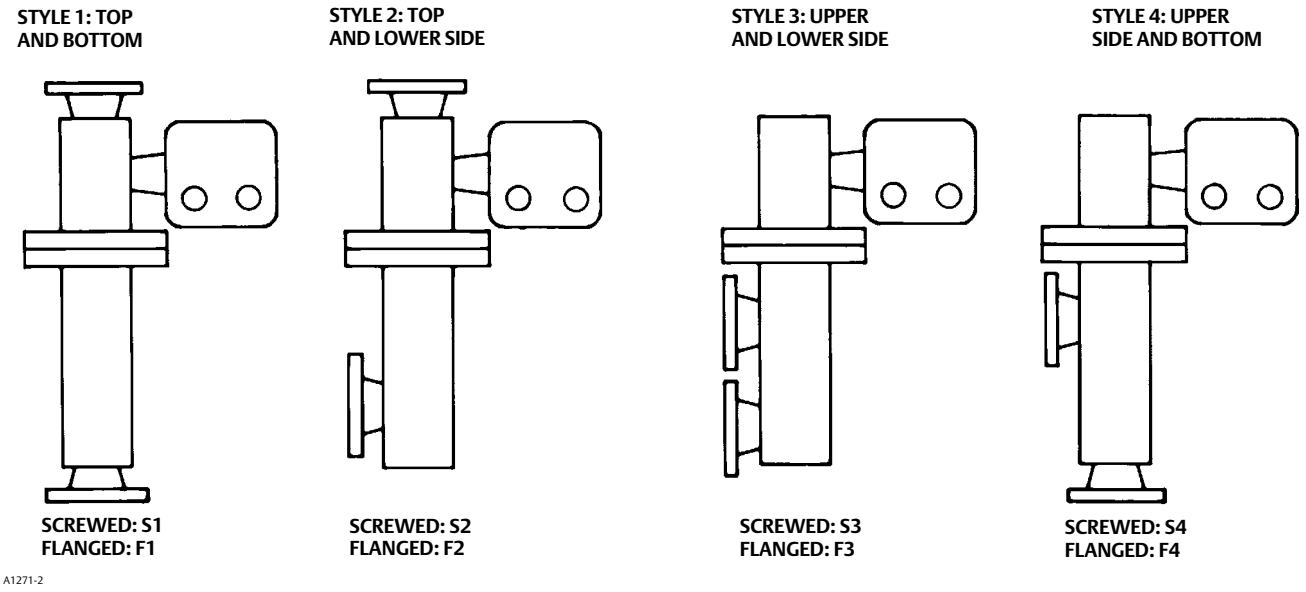

6. Use appropriate cleaning techniques, tools, and solutions. After cleaning the cage, install the liquid damper and reconnect the cage to the vessel. Install the cage head and controller/transmitter. Properly calibrate the controller/transmitter following the procedures given in the controller/transmitter instruction manual.

Removing the Displacer and Stem

The displacer (key 10) is a sealed container. If the displacer has been penetrated by process pressure or liquid, it may hold pressure or hazardous liquid for an extended period.

Process residue buildup on the displacer and stem (key 24) may change displacer weight or displacement. A bent stem or a dented or corroded displacer can impair performance.

If the displacer rests against the travel stop, appears to be overweight, or causes output drift or other output inaccuracies, it may have been penetrated by process pressure or liquid. Such a displacer may contain pressure

because it was in a pressurized vessel, may contain process liquid that becomes pressurized due to a change in temperature, and may contain process liquid that is flammable, hazardous or corrosive.

⚠ WARNING

Sudden release of pressure, contact with hazardous liquid, fire, or explosion, which may result in personal injury or property damage, can occur if a displacer that is retaining pressure or process liquid is punctured, subjected to heat, or repaired.

Handle the displacer with care:

1. Before starting any maintenance procedure, be sure the following safety actions have been completed.
   - Relieve process pressure in the vessel where the 249 sensor is installed.
   - Drain the process liquid from the vessel.
   - Shut off any electrical or pneumatic input to the controller or transmitter attached to the 249 sensor and vent any pneumatic supply pressure. Remove the controller or transmitter from the torque tube arm.
   - Be sure the cage is also free of process pressure and/or liquid. Use caution when loosening flange bolting or pipe plugs.
   - Be sure process pressure or liquids have not penetrated the displacer.
2. Properly support the cage head or sensor head (key 2) and the torque tube arm (key 3). Remove the cap screws or stud bolts (key 21) and hex nuts (key 22) that hold the cage head to the cage.

CAUTION

When removing the sensor from the cage, the displacer may remain attached to the displacer rod and be lifted out with the cage head (key 2) when the cage head is removed. If separating the displacer and displacer rod/drive assembly (key 9) before removing the cage head, remove the cotter spring (key 11).

Be careful not to let the displacer slip and drop into the bottom of the cage, as displacer damage could result.

3. When removing the sensor from the cage, the displacer may remain attached to the displacer rod and be lifted out with the cage head (key 2) when the cage head is removed. If separating the displacer and displacer rod/driver assembly (key 9) before removing the cage head, remove the cotter spring (key 11) according to the Replacing the Displacer, Cotter Spring, Stem End Piece, and Displacer Spud section. Be careful not to let the displacer slip and drop into the bottom of the cage, as displacer damage could result.
4. Carefully remove the cage head and lift out the displacer (key 10). If the displacer comes out with the cage head, be careful not to damage the displacer or bend the stem when setting the cage head down.
5. Follow the procedure for replacing the displacer, displacer rod assembly, cotter spring, stem end piece, and displacer spud as necessary.

Replacing the Displacer, Cotter Spring, Stem End Piece, and Displacer Spud

The cotter spring (key 11), the ball on the displacer rod/driver assembly (key 7), and the stem end piece (key 23) or displacer spud socket may be either too worn for a secure connection or so clogged or corroded that the displacer does not pivot properly. Replace these parts, as necessary.

CAUTION

If the displacer is to be disconnected from the displacer rod before being removed from the cage, provide a suitable means of supporting the displacer to prevent it from dropping into the cage and being damaged.

1. After following the proper procedure to remove the cage head and the displacer from the cage, move the sensor assembly to a suitable maintenance area. Properly support the assembly to avoid damage to the displacer, displacer stem, displacer rod/driver assembly, and associated parts.
2. Reach the cotter spring, displacer spud, ball end of the displacer rod/driver assembly, stem end piece, or displacer stem connector as follows:
   - All sensors with style 1 or 2 (screwed or flanged) connections—through the top connection.
   - 249L sensors with style 3 or 4 (screwed or flanged) connections—by removing the hex nuts (key 33), flange (key 30), and ring (key 31).
   - All other sensors with style 3 or 4 (screwed or flanged) connections—by removing the top pipe plug (key 26).
3. Remove the cotter spring to free the displacer or stem end piece from the ball end of the displacer rod/driver assembly. Lift the displacer or stem end piece from the ball.
4. Replace worn or damaged parts as necessary. Return the displacer or stem end piece to the displacer rod/driver assembly. Install the cotter spring.
5. If necessary, clean the cage following the procedure in this manual. Install the cage head and controller/transmitter. Properly calibrate the controller/transmitter following the procedures given in the controller/transmitter instruction manual.

Replacing the Displacer Rod/Driver Assembly

The ball on the displacer rod/driver assembly (key 7) may be either too worn for a secure connection or so corroded that the displacer does not pivot properly. Replace the displacer rod/driver assembly, if necessary.

CAUTION

If the displacer is to be disconnected from the displacer rod/driver assembly before being removed from the cage, provide a suitable means of supporting the displacer to prevent it from dropping into the cage and being damaged.

1. After following the proper procedure to remove the cage head and the displacer from the cage, move the sensor assembly to a suitable maintenance area. Properly support the assembly to avoid damage to the displacer, displacer stem, displacer rod assembly, and associated parts.
2. Remove the controller/transmitter and displacer (key 10). Then, remove the hex nuts (key 20) that hold the torque tube arm (key 3) to the cage head (key 2). Separate the torque tube arm from the cage head.
3. Remove the nuts (key 18) and retaining flange (key 6) at the end of the torque tube arm.
4. Remove the positioning plate (key 8) by freeing its two lugs.

   The vertical lug fits into a hole in the flange of the torque tube arm (top of figure 6, left). The horizontal lug (hidden behind the screwdriver at the bottom of figure 6, left) fits into a slot in the outer tube end of the torque tube assembly (the figure 6 exploded view shows this lug to the right of the outer tube end).

Place a screwdriver blade in the slots of the positioning plate and outer tube end as shown in figure 6. Slowly turn the positioning plate to release its lug from the torque tube arm. Then carefully turn the plate back to allow the displacer to come to rest, and slip the other lug of the plate from its slot in the outer tube end.

5. Pull the torque tube assembly out of the torque tube arm. Remove the tube end gasket (key 14) and discard (a new gasket will be installed in step 9). Clean and inspect the gasket mating surfaces.
6. Using the proper tool, loosen and then remove the upper bearing driver bolt (key 5). Lift the displacer rod/driver assembly from the knife edge of the driver bearing (key 4).
7. Visually inspect the bearing driver for corrosion or wear. If replacement is necessary, remove the bearing driver by removing the lower bearing driver bolt. Install a new bearing driver and the lower bearing driver bolt.
8. Install the new displacer rod/driver assembly on the knife edge of the bearing driver. Install the upper bearing driver bolt (key 5), but do not tighten.
9. Insert new tube end gasket into recess in torque tube arm.
10. Insert the torque tube assembly and rotate until its socket mates with the displacer rod assembly and so that the outer tube flange rests against the gasket.
11. With a thumb on the upper portion of the positioning plate and a screwdriver in the slots as shown in figure 6, rotate the plate and press the lug on the plate into the hole in the torque tube arm (this will preload the torque tube).
12. Install the retaining flange and secure it with four nuts (key 18), being sure to tighten all nuts evenly.
13. Tighten the upper bearing driver bolt (key 5). It will be necessary to put slight pressure on the displacer rod/driver assembly to access the upper bearing driver bolt.
14. If necessary, clean the cage following the procedure in this manual. Install the cage head and controller/transmitter. Properly calibrate the controller/transmitter following the procedures given in the controller/transmitter instruction manual.

Figure 6. Torque Tube and Displacer Rod Assemblies

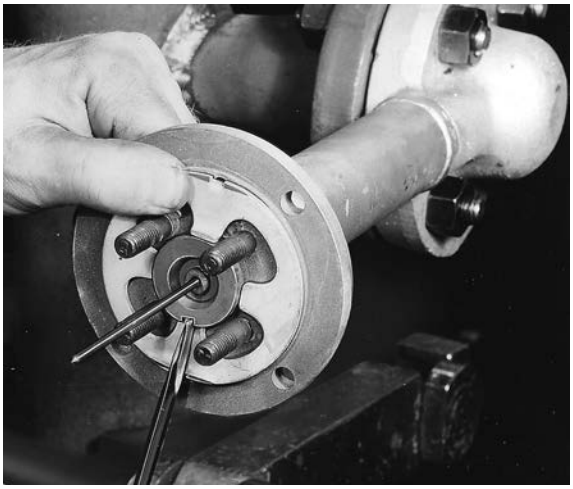

W0654-1

REMOVAL OR INSTALLATION OF POSITIONING PLATE

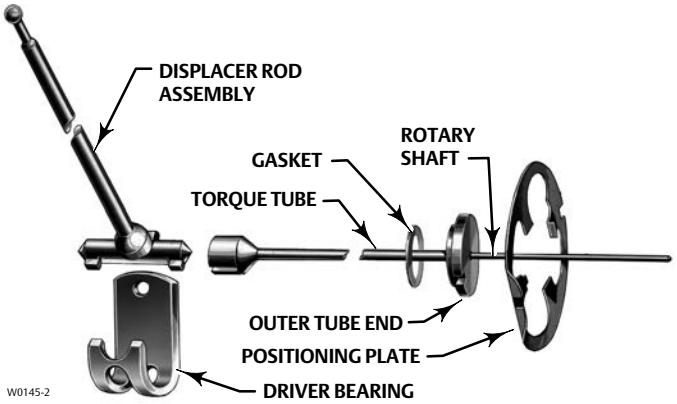

EXPLODED VIEW OF TORQUE TUBE AND DISPLACER ROD ASSEMBLY

Replacing the Torque Tube

Corrosion or leakage through the outer end of the torque tube is evidence of deterioration in the torque tube assembly (key 9) or torque tube end gasket (key 14). Erratic or nonexistent rotary shaft output may occur if the socket on the inner end of the torque tube assembly does not engage the bearing end of the displacer rod assembly (key 7).

1. After following the proper procedure to remove the cage head and the displacer from the cage, move the sensor assembly to a suitable maintenance area.

CAUTION

Support the sensor assembly to avoid damage to the displacer, displacer stem, displacer rod assembly, and associated parts.

2. Remove the controller/transmitter and displacer (key 10). Then, remove the hex nuts (key 20) that hold the torque tube arm (key 3) to the cage head (key 2). Separate the torque tube arm from the cage head.
3. Remove the nuts (key 18) and retaining flange (key 6) holding the positioning plate (key 8) at the end of the torque tube arm.

CAUTION

If the displacer is still attached to the displacer rod at this point, be careful not to let the torque tube assembly slip when using the screwdriver leverage procedure in steps 4 and 6. Sudden release of the displacer could cause damage.

4. Remove the positioning plate (key 8) by freeing its two lugs.

   The vertical lug fits into a hole in the flange of the torque tube arm (top of figure 6, left). The horizontal lug (hidden behind the screwdriver at the bottom of figure 6, left) fits into a slot in the outer tube end of the torque tube assembly (the figure 6 exploded view shows this lug to the right of the outer tube end).

   The positioning plate may be pried away from the torque tube arm and outer tube end if the displacer already has been disconnected from the displacer rod. However, if the displacer is still connected to the displacer rod, place a screwdriver blade in the slots of the positioning plate and outer tube end as shown in figure 6. Slowly turn the positioning plate to release its lug from the torque tube arm. Then carefully turn the plate back to allow the displacer to come to rest, and slip the other lug of the plate from its slot in the outer tube end.
5. Pull the torque tube assembly and tube end gasket out of the torque tube arm. Remove the tube end gasket (key 14) and discard (a new gasket will be installed in step 6). Clean and inspect the gasket mating surfaces.
6. Insert new tube end gasket into recess in torque tube arm.
7. Insert the torque tube assembly into the torque tube arm as shown in figure 6. Rotate the torque tube assembly until its socket mates with the driver member on the displacer rod assembly and so that the outer tube flange rests against the gasket. With a thumb on the upper portion of the positioning plate and a screwdriver in the slots as shown in figure 6, rotate the plate and press the lug on the plate into the hole in the torque tube arm (this will preload the torque tube).
8. Install the retaining flange and secure it with four nuts (key 18), being sure to tighten all nuts evenly.
9. If necessary, clean the cage following the procedure in this manual. Install the cage head and controller/transmitter. Properly calibrate the controller/transmitter following the procedures given in the controller/transmitter instruction manual.

Changing Cage Head Position

The cage head (key 2) may be mounted so that the torque tube arm (key 3) is in any one of eight alternate positions around the cage as shown in figure 7. Neither the displacer nor the torque tube arm need be removed when head position is changed.

Figure 7. Cage Head Mounting Positions

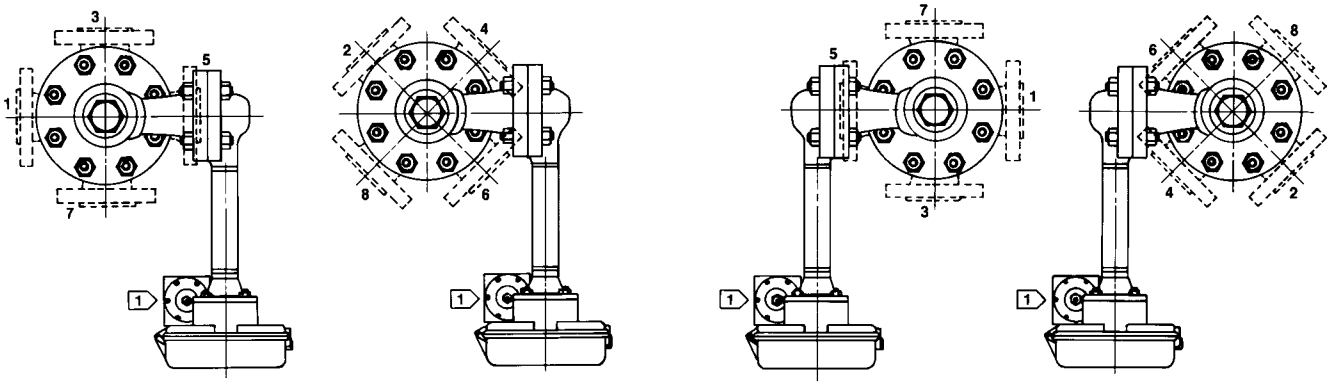

1 67FR FILTER/REGULATOR

AH9150-A
A2613-2

1. Before starting any maintenance procedure, be sure the following safety actions have been completed.
   - Relieve process pressure in the vessel where the 249 sensor is installed.
   - Drain the process liquid from the vessel.
   - Shut off any electrical or pneumatic input to the controller or transmitter attached to the 249 sensor and vent any pneumatic supply pressure. Remove the controller or transmitter from the torque tube arm.
   - Be sure the cage is also free of process pressure and/or liquid. Use caution when loosening flange bolting or pipe plugs.
   - Be sure process pressure or liquids have not penetrated the displacer.
2. Remove the hex nuts (keys 20 or 22) from the bolting (key 21) and reposition the head as desired.

Replacing the Torque Tube Arm and Changing the Mounting

1. Looseness of the driver bearing (key 4); wear on its knife-edged surface; or a bent, worn, or corroded displacer rod assembly (key 7) may impair performance. Be especially sure to check the ball on the displacer rod.
2. After following the proper procedure to remove the cage head and the displacer from the cage, move the sensor assembly to a suitable maintenance area.

CAUTION

Support the sensor assembly to avoid damage to the displacer, displacer stem, displacer rod assembly, and associated parts.

3. Remove the controller/transmitter and displacer (key 10). Then, remove the hex nuts (key 20) that hold the torque tube arm (key 3) to the cage head (key 2). Separate the torque tube arm from the cage head.

4. Follow the proper procedure to remove the torque tube assembly (key 9).
5. Remove the bearing bolts (key 5), displacer rod assembly, and driver bearing.
6. Determine the new mounting orientation.

Note

Be sure that the driver bearing will be installed so that its knife edge is pointing up when the torque tube arm is mounted in the desired orientation (figure 7). Since changing the mounting position of the torque tube arm by 180° will change controller or transmitter action from direct to reverse or vice versa, the controller/transmitter action must be reversed from what it was before the mounting method was changed.

7. Install the driver bearing, displacer rod assembly, and bearing bolts (key 5) into the torque tube arm. Install a new arm gasket. Install the torque tube arm in the desired mounting position on the cage head and secure it with the proper bolting (keys 19 and 20).
8. Install the torque tube assembly. Install the displacer.
9. If necessary, clean the cage following the procedure in this manual. Install the cage head and controller/transmitter. Properly calibrate the controller/transmitter following the procedures given in the controller/transmitter instruction manual.

Simulation of Process Conditions for Calibration of Fisher Level Controllers and Transmitters

Contact your Emerson sales office or Local Business Partner for information on obtaining the Supplement to 249 Sensor Instruction Manuals—Simulation of Process Conditions for Calibration of Fisher Level Controllers and Transmitters (D103066X012), or visit our website at Fisher.com.

Related Documents

This section lists other documents containing information related to the 249 level sensor. These documents include:

- Bulletin 34.2:2500—2500-249 Pneumatic Controllers and Transmitters (D200037X012)
- Bulletin 34.2:249—Fisher 249 Sensor, Level Controller, and Transmitter Dimensions (D200039X012)
- Simulation of Process Conditions for Calibration of Fisher Level Controllers and Transmitters— Supplement to 249 Sensor Instruction Manuals (D103066X012)
- Bolt Torque Information— Supplement to 249 Sensor Instruction Manuals (D103220X012)
- Torque Tube Identification— Supplement to 249 Sensor Instruction Manuals (D103283X012)

All documents are available from your Emerson sales office or Local Business Partner. Also visit our website at Fisher.com.

Parts Ordering

Whenever corresponding with your Emerson sales office or Local Business Partner about this equipment, always mention the sensor serial number. Each sensor is assigned a serial number which is stamped on a nameplate (key 54,

not shown) attached to the torque tube arm. This same number also appears on the controller/transmitter nameplate when a complete controller/ transmitter-sensor unit is shipped from the factory.

⚠ WARNING

Use only genuine Fisher replacement parts. Components that are not supplied by Emerson Automation Solutions should not, under any circumstances, be used in any Fisher instrument. Use of components not supplied by Emerson Automation Solutions may void your warranty, might adversely affect the performance of the instrument, and could cause personal injury or property damage.

Parts Kits

Description	Part Number
Sensor Parts Kits	
Kit contains keys 9, 11, 12, 13, 14	
For 249	
Kit includes 1 cage gasket (key 12) for 249 CL125 and 1 cage gasket (key 12) for 249 CL250	R249X000022
For 249B	R249BX00012

Parts List

Note

Contact your Emerson sales office or Local Business Partner for Part Ordering information.

Key	Description

Sensor Common Parts

Key	Description
1	Cage
2	Cage Head
3	Torque Tube Arm
4	Driver Bearing(1), S31600
5	Driver Bearing Bolt(1), S31600 (2 req'd)
6	Retaining Flange (see above note)
7	Rod/Driver Assy(1), S31600 stainless steel (SST) 249 and 249B 249C Standard wall torque tube Heavy wall torque tube 249K 249L
8	Positioning Plate, Steel
9*	Torque Tube Assy(1) 249 and 249B N05500 Standard wall Thin wall Heavywall 249C S31600 Standard wall Heavy wall 249K and 249L N05500 Standard wall Thin wall
10*	Displacer(1) 249 and 249B 3 X 14 Inches (1600 psi), S30400 2 X 32 Inches (1500 psi), S31600 1-5/8 X 48 Inches (1800 psi), S30400 1-1/2 X 60 Inches (1800 psi), S30400 1-3/8 X 72 Inches (1400 psi), S30400 249C 1-1/2 X 32 Inches (1300 psi), S31600 2-3/8 X 14 Inches (1400 psi), S31600 249K 1-3/4 X 32 Inches (4200 psi), S30400 2-3/4 X 14 Inches (6000 psi), S30400 249L 2-3/4 X 14 Inches (6000 psi), S30400
11*	Cotter Spring(1), N04400 (2 req'd)
12*	Cage Gasket(1) For 249, Graphite-stainless steel (Unless otherwise noted) CL125 CL250 249B 0Y0873X0082 249C 1F8305X0062 249K, composition-stainless steel

*Recommended spare parts
1. This part is available in a wide variety of materials of construction, part dimensions, or other specifications. Listed here are standard or typical materials, dimensions, or specifications. Contact your Emerson sales office for assistance in selection of specific materials, dimensions, or specifications.

Figure 8. Fisher 249 Sensor Construction

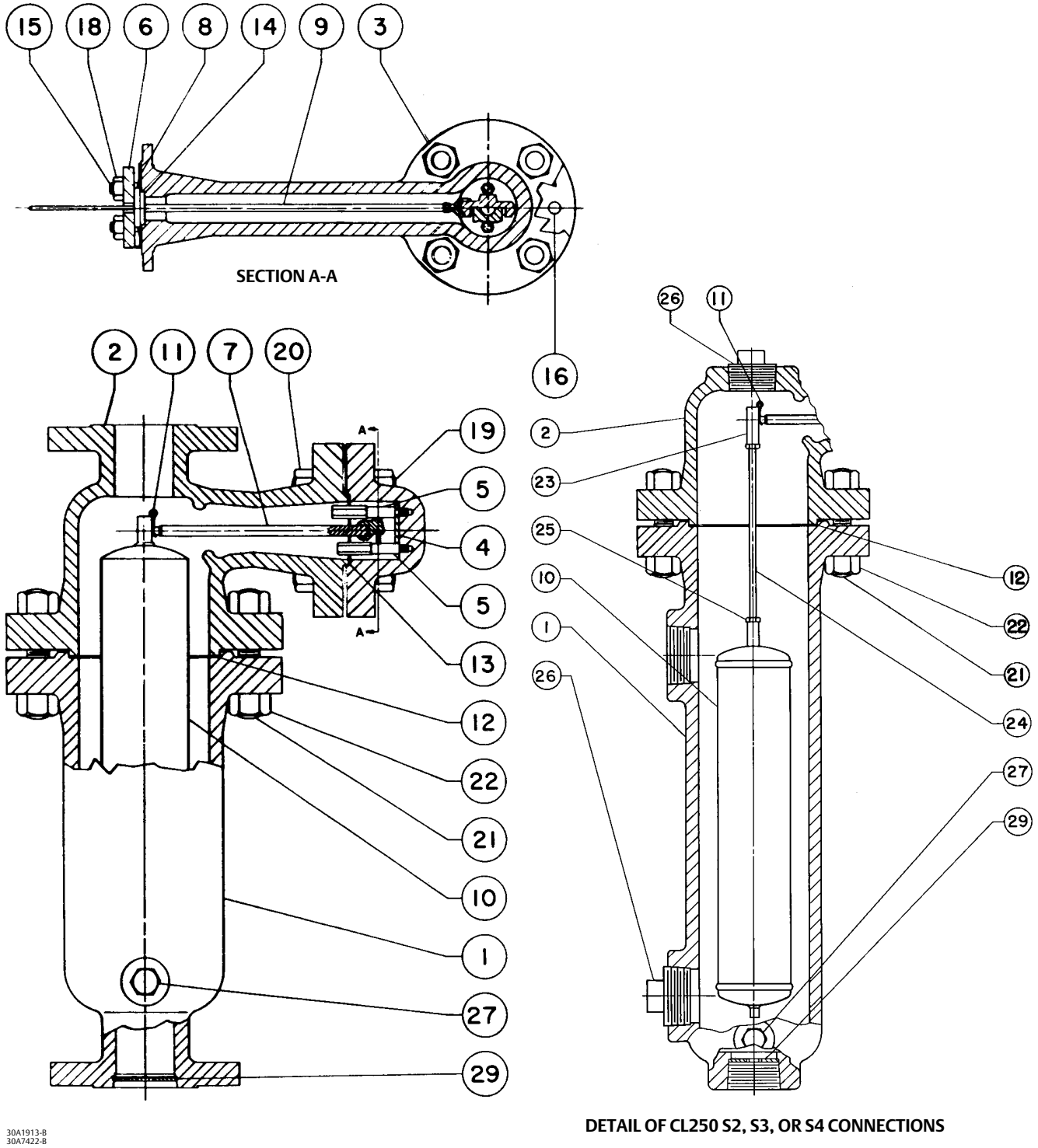

Figure 9. Fisher 249B Sensor Construction

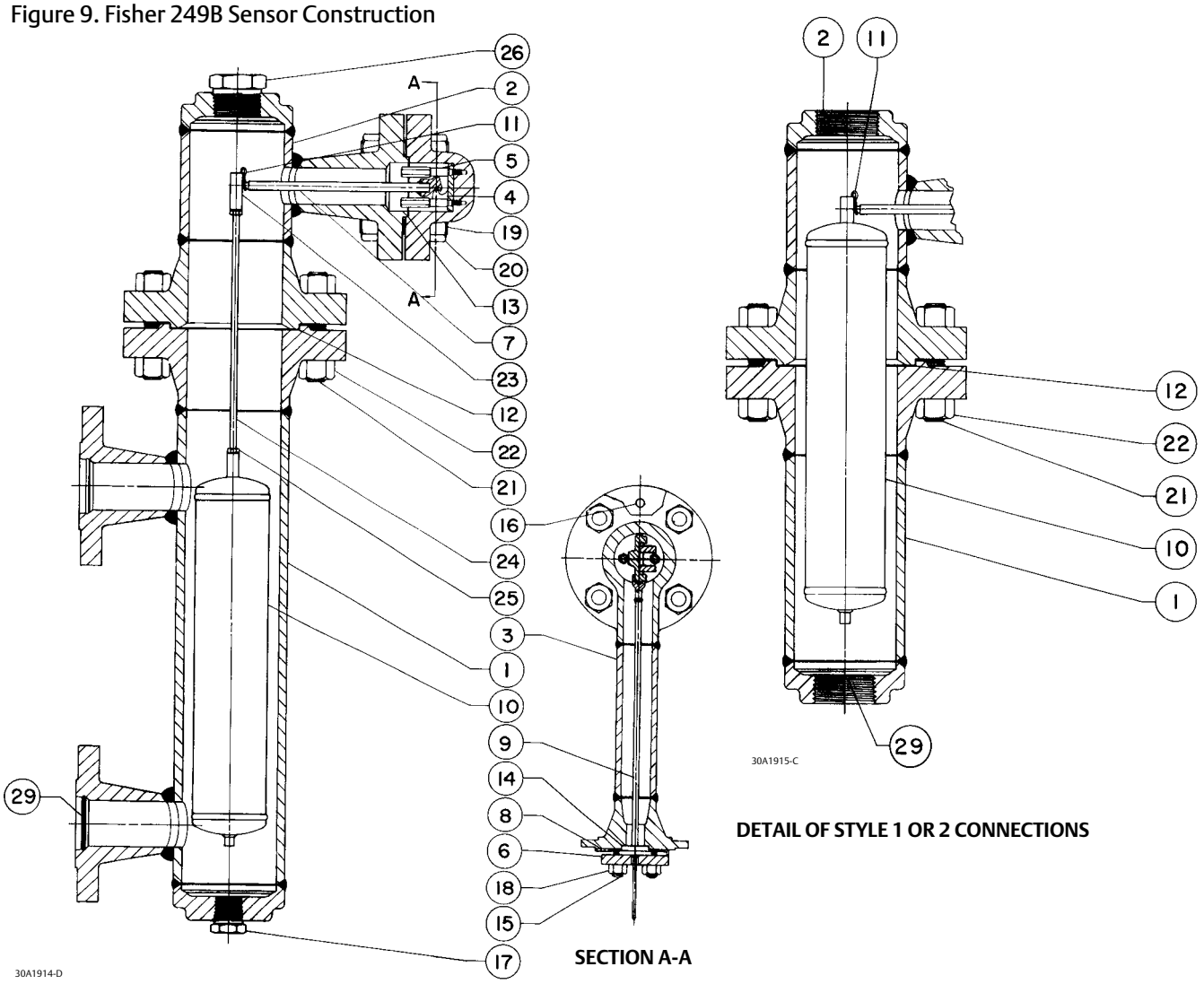

Key	Description
12*	Ring (Iron gasket) 249L only
13*	Arm Gasket(1) 249, 249B, and 249C Graphite-stainless steel 249K, composition-stainless steel
13*	Ring (Iron gasket) 249L only
14*	Tube End Gasket(1) 249, 249B, 249C, 249K, and 249L Graphite-stainless steel
14*	Outer End Gasket(1) For 249L Graphite-stainless steel
15	Stud Bolt(1) (4 req'd) 249 and 249B, Steel B7 249C, Steel B7 249K and 249L, Steel B7

*Recommended spare parts
1. This part is available in a wide variety of materials of construction, part dimensions, or other specifications. Listed here are standard or typical materials, dimensions, or specifications. Contact your Emerson sales office for assistance in selection of specific materials, dimensions, or specifications.

Key	Description
16	Groove Pin, S31600

Notes

For key 17 see figure 5: Two styles of vessel/cage connections are available: screwed (S) and flanged (F). Four connection configurations are available:

- 1, top and bottom of cage
- 2, top and lower side of cage
- 3, side of cage only
- 4, upper side and bottom of cage

Styles 1, 2, 3, 4 refer to either screwed or flanged. Styles S1, S2, S3, S4 refer to screwed connections. Styles F1, F2, F3, F4 refer to flanged connections.

Figure 10. Fisher 249C Sensor Construction

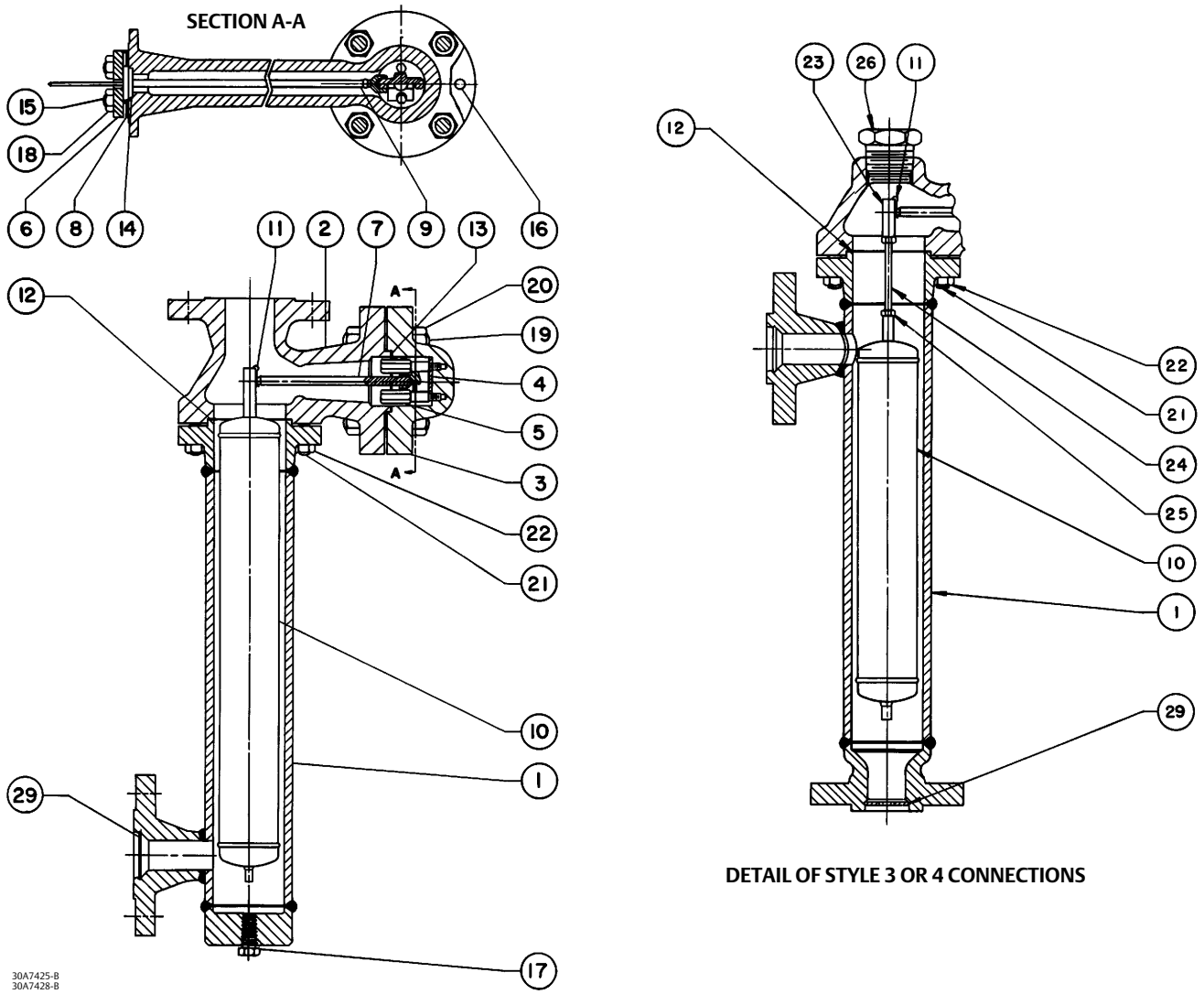

Key	Description
17	Pipe Plug(1) For 249B, styles 2, 3, steel For 249C, styles 2, 3, S31600 For 249K and 249L styles 2, 3, steel
18	Hex Nut(1) (4 req'd) For 249 and 249B, steel-B7 249C, steel-B7 For 249K and 249L steel B7
19	Cap Screw(1), steel B7 (4 req'd) For 249 CL125 CL250

Key	Description
19	Bolt Stud(1), steel B7 (4 req'd) For 249B, 249C For 249K
20	Hex Nut(1), steel For 249 CL125 (12 req'd) CL250 (4 req'd) For 249B, 249C (8 req'd) For 249K (8 req'd) For 249L (4 req'd)

1. This part is available in a wide variety of materials of construction, part dimensions, or other specifications. Listed here are standard or typical materials, dimensions, or specifications. Contact your Emerson sales office for assistance in selectio of specific materials, dimensions, or specifications.

Figure 11. Fisher 249K Sensor Construction

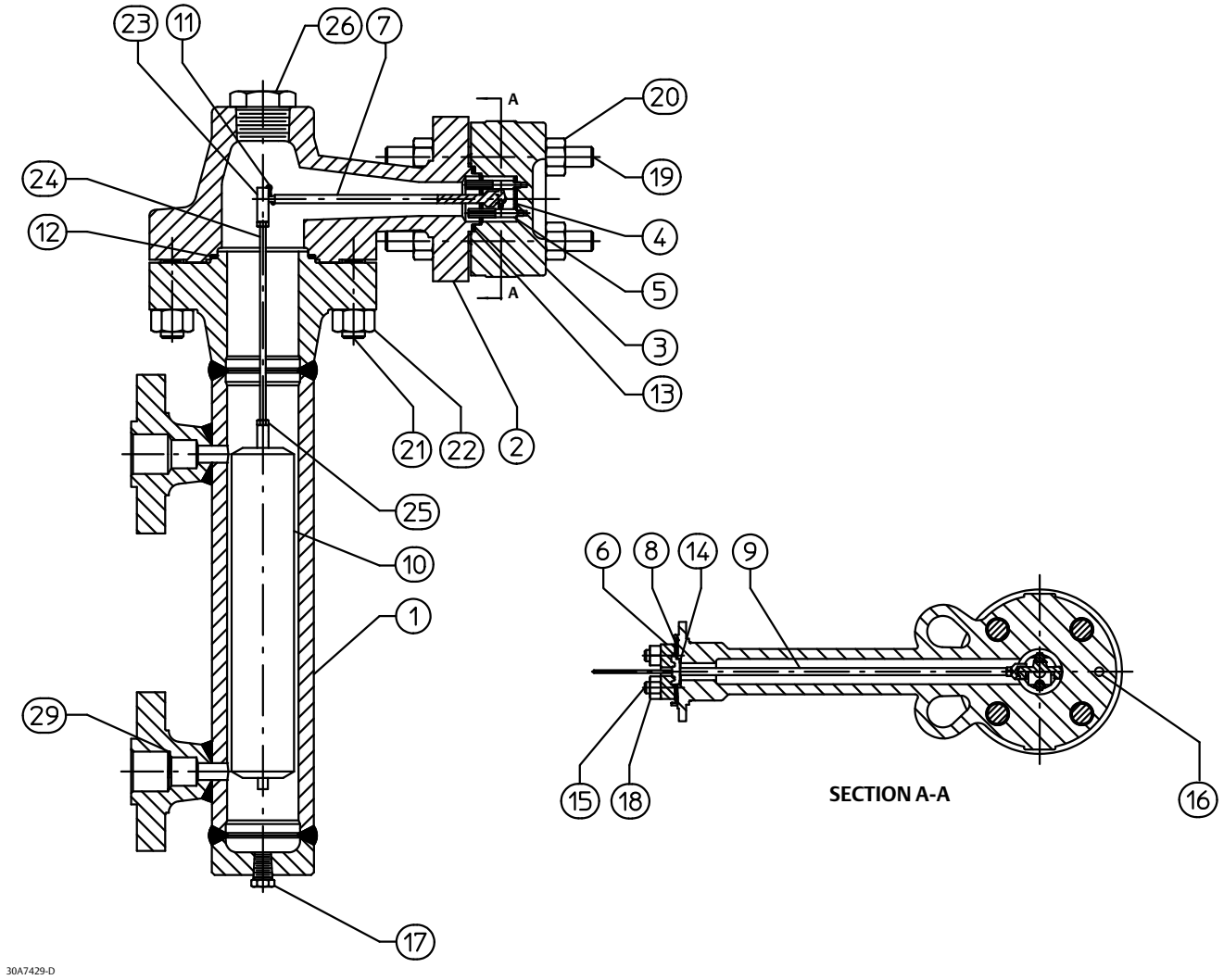

Key	Description
21	Cap Screw(1), steel B7 (8 req'd) For 249 CL125 CL250
21	Bolt Stud(1), B7 (8 req'd) For 249B For 249C For 249K For 249L
22	Hex Nut(1), steel For 249 CL250 (8 req'd) For 249B (16 req'd) For 249C (8 req'd) For 249K (8 req'd) For 249L (16 req'd)
23	Displacer Stem End Piece(1), S31600

1. This part is available in a wide variety of materials of construction, part dimensions, or other specifications. Listed here are standard or typical materials, dimensions, or specifications. Contact your Emerson sales office for assistance in selection of specific materials, dimensions, or specifications.

Key	Description

Notes

For key 24 see figure 5: Two styles of vessel/cage connections are available: screwed (S) and flanged (F). Four connection configurations are available:

- 1, top and bottom of cage
- 2, top and lower side of cage
- 3, side of cage only
- 4, upper side and bottom of cage

Styles 1, 2, 3, 4 refer to either screwed or flanged. Styles S1, S2, S3, S4 refer to screwed connections. Styles F1, F2, F3, F4 refer to flanged connections.

Key	Description
24	Displacer Stem(1), S31600 For 249 For 249B For 249C For 249K (styles F3, F4 only) For 249L (styles F1, F2 only) For 249L (styles F3, F4 only)
25	Hex Nut(1), B8M (2 req'd)

Notes

For key 26 see figure 5: Two styles of vessel/cage connections are available: screwed (S) and flanged (F). Four connection configurations are available:

- 1, top and bottom of cage
- 2, top and lower side of cage
- 3, side of cage only
- 4, upper side and bottom of cage

Styles 1, 2, 3, 4 refer to either screwed or flanged. Styles S1, S2, S3, S4 refer to screwed connections. Styles F1, F2, F3, F4 refer to flanged connections.

Key	Description
26	Pipe Plug(1) For 249, malleable cast iron 1-1/2 NPT (styles S2, S3, S4) (2 req'd) 2 NPT (style S2, S3, & S4) For 249B, steel (styles S3, S4) For 249C, S31600 (styles S3, S4) For 249K, steel (styles S3, S4)
27	Pipe Plug (2 req'd) For 249, cast iron CL125 CL250 For 249B, steel
29	Liquid Damper(1), S30400 NPS 1-1/2 connection NPS 2 connection
30	Blind Flange(1) For 249L
31*	Ring(1) (Iron gasket) For 249L
32	Stud Bolt(1), steel B7 (4 req'd) For 249L
33	Hex Nut(1), steel (4 req'd) For 249L
35	Heat Insulator Ass'y Use only when specified
36	Shaft Coupling (for heat insulator ass'y) Use only when specified
37	Shaft Extension (for heat insulator ass'y) Use only when specified
38	Set Screw (for heat insulator ass'y) (2 req'd) Use only when specified
39	Cap Screw (for heat insulator ass'y) (4 req'd) Use only when specified
40	Cap Screw (for heat insulator ass'y) (4 req'd) Use only when specified
51	Arm Flange, For 249B (partial cage ass'y)
53	Washer (for heat insulator ass'y) (4 req'd) Use only when specified
54	Nameplate
55	Drive Screw
56	NACE Nameplate
—	Shipping Block, zinc (not shown)
—	Shipping Cone, cast iron (not shown)

*Recommended spare parts

1. This part is available in a wide variety of materials of construction, part dimensions, or other specifications. Listed here are standard or typical materials, dimensions, or specifications. Contact your Emerson sales office for assistance in selection of specific materials, dimensions, or specifications.

Figure 12. Fisher 249L Sensor Construction

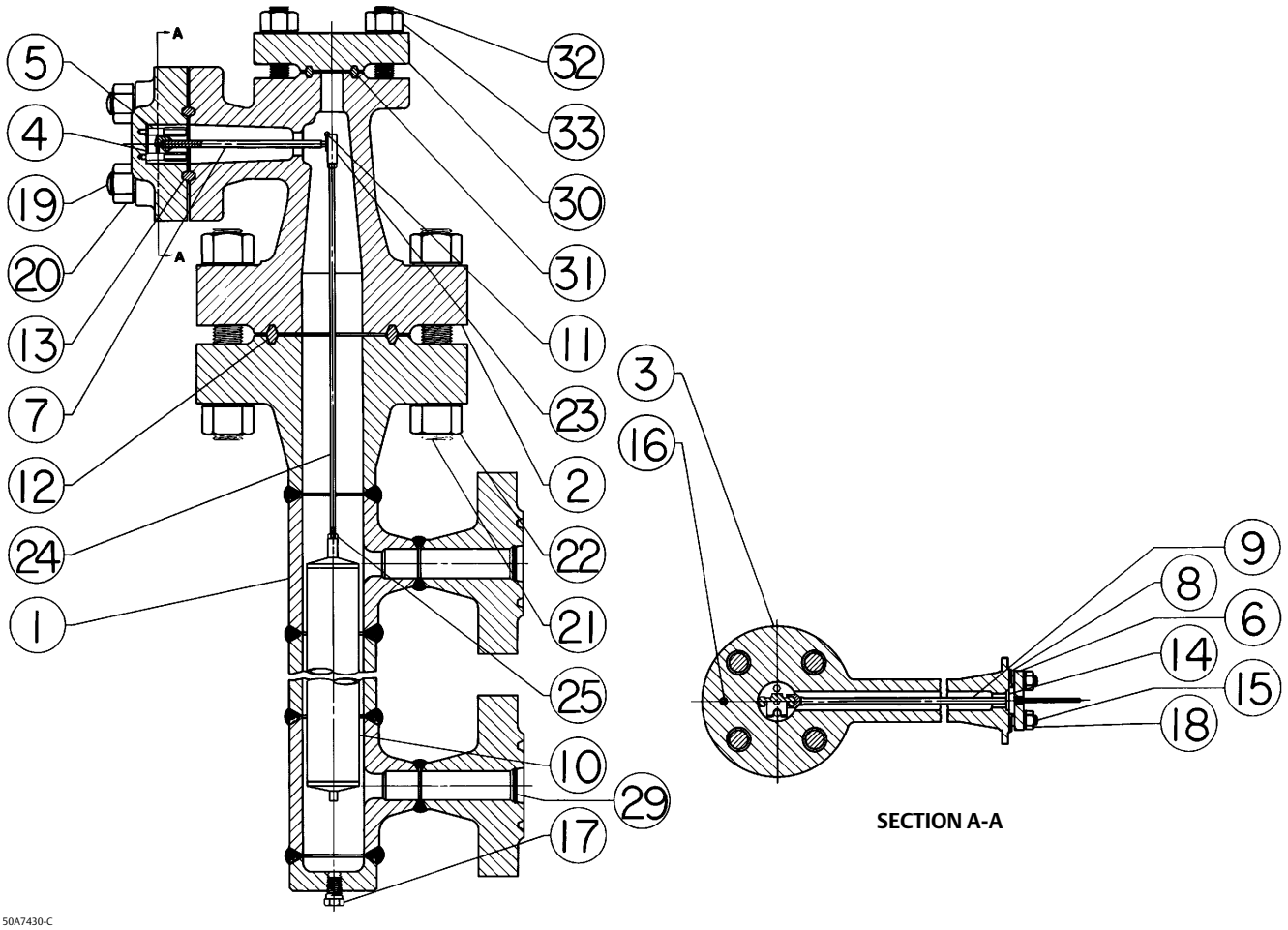

Neither Emerson, Emerson Automation Solutions, nor any of their affiliated entities assumes responsibility for the selection, use or maintenance of any product. Responsibility for proper selection, use, and maintenance of any product remains solely with the purchaser and end user.

Fisher is a mark owned by one of the companies in the Emerson Automation Solutions business unit of Emerson Electric Co. Emerson Automation Solutions, Emerson, and the Emerson logo are trademarks and service marks of Emerson Electric Co. All other marks are the property of their respective owners.

The contents of this publication are presented for informational purposes only, and while every effort has been made to ensure their accuracy, they are not to be construed as warranties or guarantees, express or implied, regarding the products or services described herein or their use or applicability. All sales are governed by our terms and conditions, which are available upon request. We reserve the right to modify or improve the designs or specifications of such products at any time without notice.

Emerson Automation Solutions
Marshalltown, Iowa 50158 USA
Sorocaba, 18087 Brazil
Cernay, 68700 France
Dubai, United Arab Emirates
Singapore 128461 Singapore

www.Fisher.com

© 1976, 2017 Fisher Controls International LLC. All rights reserved.