Product Data Sheet
March 2017
00813-0100-4680, Rev AA

Rosemount™ 3051P In-Line Pressure Transmitter

Settings the standard for pressure measurement

Proven best-in-class performance and safety

- Over 7 million installed
- Reference accuracy 0.04% of span
- Rangeability of 50:1
- Installed performance of 0.14% of span
- 10-year stability of 0.2% of URL
- SIL 2/3 certified (IEC 61508)
- Over 20 years of backwards compatibility allows you to invest in the latest features without adding complexity to your plant.

Proven reliability for gage and absolute applications

- Fully configurable LCD display to display process variable percent of range, and diagnostic messages.
- Lightweight, compact design enables easy installation.
- Choice of stainless steel or Alloy C-276 wetted materials.
- Option to add on 316 SST (Stainless Steel) brackets and tagging.

Local operator interface (LOI)

- Straightforward menus and built-in configuration buttons allow you commission the device in less than a minute.
- Configure in hazardous-area locations without removing the transmitter cover using external buttons.

Contents

Rosemount 3051P In-Line Pressure Transmitter 3
Specifications 8
Product Certifications 11
Dimensional Drawings 15

Rosemount 3051P In-Line Pressure Transmitter

Rosemount 3051P In-Line Pressure Transmitter

Additional Information

Specifications: page 8
Certifications: page 11
Dimensional Drawings: page 15

Table 1. Rosemount 3051P In-Line Pressure Transmitter Ordering Information

The starred offerings (★) represent the most common options and should be selected for best delivery. The non-starred offerings are subject to additional delivery lead time.

Model	Transmitter type		
3051P	In-line Pressure Transmitter		
Pressure type			
G	Gage		★
A	Absolute		★
Pressure range			
	Gage (Rosemount 3051PG)[1]	**Absolute (Rosemount 3051PTA)**	
1	–14.7 to 30 psi (–1,01 to 2,06 bar)	0 to 30 psia (0 to 2,06 bar)	★
2	–14.7 to 150 psi (–1,01 to 10,34 bar)	0 to 150 psia (0 to 10,34 bar)	★
3	–14.7 to 800 psi (–1,01 to 55,15 bar)	0 to 800 psia (0 to 55,15 bar)	★
4	–14.7 to 4000 psi (–1,01 to 275,79 bar)	0 to 4000 psia (0 to 275,79 bar)	★
Transmitter output			
A[2]	4–20 mA with digital signal based on HART Protocol		★
Process connection style			
2B	1/2–14 NPT female		★
2C	G1/2 A DIN 16288 male		★
Isolating diaphragm[3]		**Process connection wetted parts material**	
2	316L SST	316L SST	★
3	Alloy C-276	Alloy C-276	★
Sensor fill fluid			
1	Silicone		★
2	Inert		★

Table 1. Rosemount 3051P In-Line Pressure Transmitter Ordering Information

The starred offerings (★) represent the most common options and should be selected for best delivery. The non-starred offerings are subject to additional delivery lead time.

Housing material		Conduit entry size	
A	Aluminum	1/2–14 NPT	★
B	Aluminum	M20 × 1.5	★
D[4]	Aluminum	G1/2	

HART Revision configuration[2]

HR5	Configured for HART® Revision 5	★
HR7	Configured for HART Revision 7	★

Options (include with selected model number)

Extended product warranty		
WR3	3-year limited warranty	★
WR5	5-year limited warranty	★
Integral manifold assembly[5]		
S5	Assemble to Rosemount 306 Integral Manifold	★
Diaphragm seal assemblies[5]		
S1	Assemble to one Rosemount 1199 Seal	★
Mounting bracket[6]		
B4	Bracket for 2-in. pipe or panel mounting, all SST	★
BE	316 SST B4 Bracket with 316 SST Bolts	
Product certifications		
E1	ATEX Flameproof	★
I1	ATEX Intrinsic Safety and Dust	★
N1	ATEX Type n	★
ND	ATEX Dust	★
K1	ATEX Flameproof, Intrinsic Safety, Type n, Dust (combination of E1, I1 and N1)	★
E5	USA Explosion-proof, Dust Ignition-proof	★
I5	USA Intrinsically Safe, Nonincendive	★
K5	USA Explosion-proof, Dust Ignition-proof, Intrinsically Safe, and Nonincendive	★
I6	Canada Intrinsic Safety	★
E6	Canada Explosion-proof, Dust Ignition-proof, Division 2	★
K6	Canada Explosion-proof, Dust Ignition-proof, Intrinsically Safe, and Nonincendive	★
E7	IECEx Flameproof	★
I7	IECEx Intrinsic Safety	★
N7	IECEx Type n	★

Table 1. Rosemount 3051P In-Line Pressure Transmitter Ordering Information

The starred offerings (★) represent the most common options and should be selected for best delivery. The non-starred offerings are subject to additional delivery lead time.

NK	IECEx Dust	★
K7	IECEx Flameproof, Dust Ignition-proof, Intrinsic Safety, and Type n (combination of I7, N7, NK and E7)	★
E2	INMETRO Flameproof	★
I2	INMETRO Intrinsic Safety	★
K2	INMETRO Flameproof, Intrinsic Safety	★
E3	China Flameproof	★
I3	China Intrinsic Safety	★
N3	China Type n	★
EM	Technical Regulations Customs Union (EAC) Flameproof	★
IM	Technical Regulations Customs Union (EAC) Intrinsic Safety	★
KM	Technical Regulations Customs Union (EAC) Flameproof and Intrinsic Safety	★
KB	USA and Canada Explosion-proof, Dust Ignition-proof, Intrinsically Safe, and Nonincendive (combination of K5 and K6)	★
KD	USA, Canada, and ATEX Explosion-proof, Intrinsically Safe (combination of K5, K6, I1, and E8)	★
Drinking water approval[7]		
DW	NSF drinking water approval	★
Calibration certification		
Q4	Calibration certificate	★
QG[8]	Calibration certificate and GOST verification certificate	★
QP	Calibration certification and tamper evident seal	★
Material traceability certification		
Q8	Material traceability certification per EN 10204 3.1	★
Quality certification for safety		
QS	Prior-use certificate of FMEDA data	★
QT	Safety certified to IEC 61508 with certificate of FMEDA	★
Configuration buttons[9]		
D4	Analog zero and span	★
DZ	Digital zero trim	★
Display and interface options		
M4[9]	LCD display with LOI	★
M5	LCD display	★
Conduit plug[10][11]		
DO	316 SST conduit plug	★

Table 1. Rosemount 3051P In-Line Pressure Transmitter Ordering Information

The starred offerings (★) represent the most common options and should be selected for best delivery. The non-starred offerings are subject to additional delivery lead time.

Transient terminal block		
T1	Transient protection terminal block	★
Software configuration		
C1	Custom software configuration (requires completed Rosemount 3051 Configuration Data Sheet)	★
Alarm levels		
C4	Analog output levels compliant with NAMUR recommendation NE 43, alarm high	★
CN	Analog output levels compliant with NAMUR recommendation NE 43, low alarm	★
CR	Custom alarm and saturation signal levels, high alarm (requires C1 and Configuration Data Sheet)	★
CS	Custom alarm and saturation signal levels, low alarm (requires C1 and Configuration Data Sheet)	★
CT	Rosemount standard low alarm	★
Pressure testing		
P1	Hydrostatic testing with certificate	
Cleaning process area[11]		
P2	Cleaning for special service	
P3	Cleaning for <1 PPM Chlorine/Fluorine	
Ground screw[12]		
V5	External ground screw assembly	★
Surface finish		
Q16	Surface finish certification for sanitary remote seals	★
Toolkit total system performance reports		
QZ	Remote seal system performance calculation report	★
Conduit electrical connector		
GE	M12, 4-pin, male connector (eurofast)	★
GM	A size mini, 4-pin, male connector (minifast)	★
NACE certificate[13]		
Q15	Certificate of compliance to NACE MR0175/ISO15156 for wetted materials	★
Q25	Certificate of compliance to NACE MR0103 for wetted materials	★
316 SST tagging		
Y2	316 SST Nameplates, labels, tags, and fasteners	★
Typical model number: 3051P G 3 A 2B 2 1 A B4		

1. Rosemount 3051PG lower range limit varies with atmospheric pressure.
2. Option HR5 configures the HART output to HART Revision 5. Option HR7 configures the HART output to HART Revision 7. The device can be field configured to HART Revision 5 or 7 if desired. HART Revision 5 is the default HART output.

3. Materials of Construction comply with recommendations per NACE® MR0175/ISO 15156 for sour oil field production environments. Environmental limits apply to certain materials. Consult latest standard for details. Selected materials also conform to NACE MR0103 for sour refining environments.
4. Only available with product certifications I1 or no approvals.
5. "Assemble-to" items are specified separately and require a completed model number.
6. Panel mounting bolts are not supplied.
7. Not available with Alloy C-276 isolator (option code 3), Assemble-to manifolds (option code S5), assemble-to seals (option code S1), surface finish certification (option code Q16), and remote seal system report (option code QZ).
8. Contact an Emerson Automation Solutions representative for availability.
9. Select Configuration buttons (option code D4 or DZ) or LOI (option code M4) if local configuration buttons are required.
10. Transmitter is shipped with 316 SST conduit plug (uninstalled) in place of standard carbon steel conduit plug.
11. Not valid with alternate process connection S5.
12. The V5 option is not needed with T1 option; external ground screw assembly is included with the T1 option.
13. NACE compliant wetted materials are identified by Footnote 3.

Specifications

Performance specifications

Reference accuracy

Stated reference accuracy equations include terminal based linearity, hysteresis, and repeatability.

Range	Reference accuracy
Ranges 1-4	± 0.04% of span for spans less than 10:1, accuracy = $\pm\left[0.0075\left(\frac{URL}{Span}\right)\right]$% of Span

Long term stability

Range	Long term stability
Ranges 1-4	±0.2% of URL for ten years ±50 °F (28 °C) temperature changes, and up to 1000 psi (68,95 bar) line pressure.

Dynamic performance

	4 - 20 mA HART[1]	Typical HART transmitter response time
Total Response Time (Td + Tc)[2]:		
Rosemount 3051P:	100 ms	
Dead Time (Td)	45 ms (nominal)	
Update Rate	22 times per second	

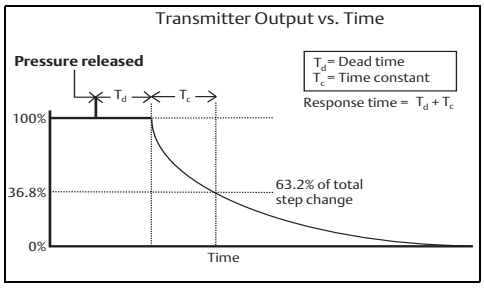

1. Dead time and update rate apply to all models and ranges; analog output only.
2. Nominal total response time at 75 °F (24 °C) reference conditions.

Ambient temperature effect per 50 °F (28 °C)

Range	Ambient temperature effect
Ranges 2-4	±{0.025 + 0.05(URL/span)}% of span from 1:1 to 10:1 ±{0.125 + 0.07(URL/span)}% of span from 10:1 to 150:1
Range 1	±{0.25 + 0.05(URL/span)}% of span from 1:1 to 5:1 ±(0.125+ 0.10 (URL/span)}% of span from 5:1 to 100:1

Mounting position effects

Model	Mounting position effects
Rosemount 3051P	Zero shifts up to ±2.5 inH_2O (6.22 mbar), which can be calibrated out. No span effect.

Vibration effect

Less than ±0.1% of URL when tested per the requirements of IEC60770-1: 1999 field or pipeline with high vibration level (10-60 Hz 0.21 mm displacement peak amplitude/60-2000 Hz 3g).

Power supply effect

Less than ±0.005% of calibrated span per volt.

Electromagnetic Compatibility (EMC)

Meets all industrial environment requirements of EN61326 and NAMUR NE-21. Maximum deviation < 1% Span during EMC disturbance[1].

1. *During surge event device may exceed maximum EMC deviation limit or reset; however, device will self-recover and return to normal operation within specified start-up time.*

Transient protection (Option code T1)

Meets IEEE C62.41, Category Location B
6 kV crest (0.5 µs - 100 kHz)
3 kA crest (8 × 20 microseconds)
6 kV crest (1.2 × 50 microseconds)

Functional specifications

Service

Liquid, gas, and vapor applications

Power supply

External power supply required. Standard transmitter (4-20mA) operates on 10.5-42.4 Vdc with no load.

Load limitations

Maximum loop resistance is determined by the voltage level of the external power supply described by:

Max. Loop Resistance = 43.5 (Power Supply Voltage – 10.5)

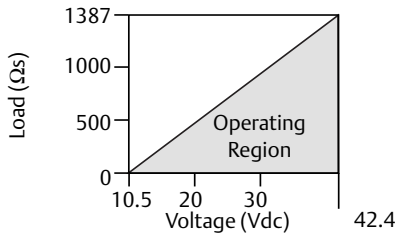

Communication requires a minimum loop resistance of 250 ohms.

Range and sensor limits

Table 2. Range and Sensor Limits

Range	Minimum span	Upper Range Limit (URL)	Lower Range Limit (LRL)	
			Absolute	Gage[1]
1	0.30 psi (20,68 mbar)	30.00 psi (2,06 bar)	0 psi (0 bar)	–14.70 psig (–1,01 bar)
2	1.00 psi (68,94 mbar)	150.00 psi (10,34 bar)	0 psi (0 bar)	–14.70 psig (–1,01 bar)
3	5.33 psi (367,49 mbar)	800.00 psi (55,15 bar)	0 psi (0 bar)	–14.70 psig (–1,01 bar)
4	26.67 psi (1,83 bar)	4000.00 psi (275,79 bar)	0 psi (0 bar)	–14.70 psig (–1,01 bar)

1. Assumes atmospheric pressure of 14.7 psig.

Zero and span adjustment requirements

Zero and span values can be set anywhere within the range limits stated in Table 2.
Span must be greater than or equal to the minimum span stated in Table 2.

Output

Two-wire 4-20mA, user selectable for linear or square root output. Digital process variable superimposed on 4-20 mA signal, available to any host that conforms to HART protocol.

Selectable HART revisions

The Rosemount 3051P comes with Selectable HART Revisions. Digital communications based on HART Revision 5 (option code HR5) or Revision 7 (option code HR7) protocol must be selected. The HART revision can be switched in the field using any HART based configuration tool.

Overpressure limits

- Range 1: 750 psi (51,71 bar)
- Range 2: 1500 psi (103,42 bar)
- Range 3: 1600 psi (110,32 bar)
- Range 4: 6000 psi (413,69 bar)

Burst pressure limit

11000 psi (75.8 MPa)

Failure mode alarm

If self-diagnostics detect a sensor or microprocessor failure, the analog signal is driven either high or low to alert the user. High or low failure mode is user-selectable with a jumper/switch on the transmitter. The values to which the transmitter drives its output in failure mode depend on whether it is configured to standard, NAMUR-compliant, or custom levels (see Alarm Configuration below). The values for each are as follows:

	High alarm	Low alarm
Default	≥ 21.75 mA	≤ 3.75 mA
NAMUR compliant[1]	≥ 22.5 mA	≤ 3.6 mA
Custom levels[2]	20.2 - 23.0 mA	3.4 - 3.8 mA

1. Analog output levels are compliant with NAMUR recommendation NE 43, see option codes C4 or C5.
2. Low alarm must be 0.1 mA less than low saturation and high alarm must be 0.1 mA greater than high saturation.

Temperature limits

Ambient

–40 to 185 °F (–40 to 85 °C)
With LCD display: –40 to 175 °F (–40 to 80 °C)

Storage[1]

–50 to 230 °F (–46 to 110 °C)
With LCD display: –40 to 185 °F (–40 to 85 °C)

1. *If storage temperature is above 85 °C, perform a sensor trim prior to installation.*

Process

At atmospheric pressures and above. See Table 3.

Table 3. Process Temperature Limits

Rosemount 3051P (process fill fluid)	
Silicone Fill Sensor[1]	–40 to 250 °F (–40 to 121 °C)[2]
Inert Fill Sensor[1]	–22 to 250 °F (–30 to 121 °C)[2]

1. Process temperatures above 185 °F (85 °C) require derating the ambient limits by a 1.5:1 ratio.
2. 220 °F (104 °C) limit in vacuum service; 130 °F (54 °C) for pressures below 0.5 psia.

Humidity limits

0–100% relative humidity

Turn-on time

Performance within specifications less than 2.0 seconds after power is applied to the transmitter.

Volumetric displacement

Less than 0.005-in^3 (0,08 cm^3)

Damping

4-20 mA HART

Analog output response to a step input change is user-enterable from 0.0 to 60 seconds for one time constant. This software damping is in addition to sensor module response time.

Physical specifications

Electrical connections

1/2–14 NPT,G1/2 and M20 x 1.5 conduit. HART interface connections fixed to terminal block for output code A.

Process connections

1/2–14 NPT female

Process-wetted parts

1/2 - 14 NPT female

G 1/2 A DIN 16288

Drain/vent valves

316 SST, Alloy C-276

Process flanges and adapters

SST cast CF-8 or CF-8M (per ASTM A743), or C-Type cast alloy CW12MW

Wetted O-rings

Glass-filled PTFE or Graphite-filled PTFE

Process isolating diaphragms

Isolating diaphragm material

316L SST and Alloy C-276

Non-wetted parts

Electronics and sensor module housing

Polyurethane-coated aluminum, austenitic stainless steel, and/or Alloy C-276 (depending on specified option codes)

Bolts

ASTM A449, Type 1 (zinc-cobalt plated carbon steel)
ASTM F593G, Condition CW1 (Austenitic 316 SST)
ASTM A193, Grade B7M (zinc plated alloy steel)

Sensor module fill fluid

Specified in model number. Silicone and Inert Halocarbon available.

Cover O-rings

Buna-N

Shipping weights without options

Rosemount 3051P	2.4 lb. (1,1 kg)

Table 4. Transmitter Option Weights

Code	Option	Add lb. (kg)
M5	LCD display	0.5 (0,2)
B4	SST Mounting bracket for coplanar flange	1.0 (0,5)

Product Certifications

Rosemount 3051P

Rev 1.3

European Directive Information

A copy of the EU Declaration of Conformity can be found at the end of the Quick Start Guide. The most recent revision of the EU Declaration of Conformity can be found at Emerson.com/Rosemount.

North America

E5 USA Explosionproof (XP) and Dust-Ignitionproof (DIP)

Certificate: 1015441

Standards: FM Class 3600 - 2011, FM, Class 3615 - 2006, FM class 3616 - 2011, FM Class 3810 - 2005

Markings: IS CL I, DIV 1, GP A, B, C, D; CL II, DIV 1, GP E, F, G; Class III; DIV 1 when connected per Rosemount drawing 02088-1024; NI CL 1, DIV 2, GP A, B, C, D; T4(–50 °C £ Ta £ +70 °C); Type 4x

I5 USA Intrinsic Safety (IS) and Nonincendive (NI)

Certificate: 1015441

Standards: FM Class 3600 - 2011, FM Class 3610 - 2010, FM Class 3611 - 2004, FM Class 3810 - 2005

Markings: IS CL I, DIV 1, GP A, B, C, D; CL II, DIV 1, GP E, F, G; Class III; DIV 1 when connected per Rosemount drawing 02088-1024; NI CL 1, DIV 2, GP A, B, C, D; T4(–50 °C £ Ta £ +70 °C); Type 4x

E6 Canada Explosionproof, Division 2, Dust-Ignitionproof

Certificate: 1015441

Standards: CAN/CSA C22.2 No. 0-M91 (R2001), CSA Std C22.2 No. 25-1966, CSA Std C22.2 No. 30-M1986, CAN/CSA-C22.2 No. 94-M91, CSA Std C22.2 No. 142-M1987, CAN/CSA-C22.2 No. 157-92, CSA Std C22.2 No. 213-M1987, ANSI-ISA-12.27.01-2003

Markings: Class I, Division 1, Groups B, C and D; Class II, Groups E, F, and G; Class III; Class I Division 2 Groups A, B, C and D; Type 4X; Factory Sealed; Single Seal

I6 Canada Intrinsic Safety

Certificate: 1015441

Standards: CAN/CSA C22.2 No. 0-M91 (R2001), CSA Std C22.2 No. 25-1966, CSA Std C22.2 No. 30-M1986, CAN/CSA-C22.2 No. 94-M91, CSA Std C22.2 No. 142-M1987, CAN/CSA-C22.2 No. 157-92, CSA Std C22.2 No. 213-M1987, ANSI-ISA-12.27.01-2003

Markings: Intrinsically Safe Class I, Division 1 when connected in accordance with Rosemount drawing 02088-1024, Temperature Code T4; Ex ia; Type 4X; Factory Sealed; Single Seal

Europe

E1 ATEX Flameproof

Certificate: KEMA97ATEX2378X

Standards: EN 60079-0:2012 + A11:2013, EN60079-1:2014, EN60079-26:2015

Markings: Ex II 1/2 G Ex db IIC T6..T4 Ga/Gb, T6(–60 °C ≤ T_a ≤ +70 °C), T5/T4(–60 °C ≤ T_a ≤ +80 °C)

Table 5. Process Connection Temperature

Temperature class	Process connection temperature	Ambient temperature
T6	–60 °C to +70 °C	–60 °C to +70 °C
T5	–60 °C to +80 °C	–60 °C to +80 °C
T4	–60 °C to +120 °C	–60 °C to +80 °C

Special Conditions for Safe Use (X):

1. This device contains a thin wall diaphragm less than 1 mm thickness that forms a boundary between zone 0 (process connection) and zone 1 (all other parts of the equipment). The model code and datasheet are to be consulted for details of the diaphragm material. Installation, maintenance and use shall take into account the environmental conditions to which the diaphragm will be subjected. The manufacturer's instructions for installation and maintenance shall be followed in detail to assure safety during its expected lifetime.
2. Flameproof joints are not intended for repair.

3. Non-standard paint options may cause risk from electrostatic discharge. Avoid installations that could cause electrostatic build-up on painted surfaces, and only clean the painted surfaces with a damp cloth. If paint is ordered through a special option code, contact the manufacturer for more information.
4. Appropriate cable, glands and plugs need to be suitable for a temperature of 5 °C greater than maximum specified temperature for location where installed.

I1 ATEX Intrinsic Safety

Certificate: BAS00ATEX1166X

Standards: EN60079-0:2012 + A11:2013, EN60079-11:2012

Markings: Ex II 1 G Ex ia IIC T4 Ga (–55 °C ≤ T_a ≤ +70 °C)

Table 6. Input Parameters

	HART
Voltage Ui	30 V
Current Ii	200 mA
Power Pi	0.9 W
Capacitance Ci	0.012 µF

Special Conditions for Safe Use (X):

1. The apparatus is not capable of withstanding the 500 V insulation test required by EN60079-11. This must be taken into account when installing the apparatus. Flameproof joints are not intended for repair.
2. The enclosure may be made of aluminum alloy and given a protective polyurethane paint finish; however, care should be taken to protect it from impact or abrasion if located in a Zone 0 environment.

N1 ATEX Type n

Certificate: BAS00ATEX3167X

Standards: EN60079-0:2012 + A11:2013, EN60079-15:2010

Markings: Ex II 3 G Ex nA IIC T5 Gc (–55 °C £ Ta £ +70 °C)

Special Conditions for Safe Use (X):

1. This apparatus is not capable of withstanding the 500V insulation test required by EN60079-15. This must be taken into account when installing the apparatus.

ND ATEX Dust

Certificate: BAS01ATEX1427X

Standards: EN60079-0:2012 + A11:2013, EN60079-31:2009

Markings: Ex II 1 D Ex t IIIC T50 °C T50060 °C Da

Special Conditions for Safe Use (X):

1. Cable entries must be used which maintain the ingress protection of the enclosure to at least IP66.
2. Unused cable entries must be filled with suitable blanking plugs which maintain the ingress protection of the enclosure to at least IP66.
3. Cable entries and blanking plugs must be suitable for the ambient range of the apparatus and capable of withstanding a 7J impact test.

International

E7 IECEx Flameproof

Certificate: IECEx KEM 06.0021X

Standards: IEC 60079-0:2011, IEC 60079-1:2014, IEC 60079-26:2014

Markings: Ex db IIC T6...T4 Ga/Gb T6(-60 °C ≤ T_a ≤+70 °C), T5/T4(-60 °C ≤ T_a ≤ +80 °C)

Table 7. Process Connection Temperature

Temperature class	Process connection temperature	Ambient temperature
T6	–60 °C to +70 °C	–60 °C to +70 °C
T5	–60 °C to +80 °C	–60 °C to +80 °C
T4	–60 °C to +120 °C	–60 °C to +80 °C

Special Conditions for Safe Use (X):

1. This device contains a thin wall diaphragm less than 1 mm thickness that forms a boundary between zone 0 (process connection) and zone 1 (all other parts of the equipment). The model code and datasheet are to be consulted for details of the diaphragm material. Installation, maintenance and use shall take into account the environmental conditions to which the diaphragm will be subjected. The manufacturer's instructions for installation and maintenance shall be followed in detail to assure safety during its expected lifetime.
2. Flameproof joints are not intended for repair.
3. Non-standard paint options may cause risk from electrostatic discharge. Avoid installations that could cause electrostatic build-up on painted surfaces, and only clean the painted surfaces with a damp cloth. If paint is ordered through a special option code, contact the manufacturer for more information.
4. Appropriate cable, glands and plugs need to be suitable for a temperature of 5 °C greater than maximum specified temperature for location where installed.

I7 IECEx Intrinsic Safety

Certificate: IECEx BAS 12.0071X

Standards: IEC60079-0:2011, IEC60079-11:2011

Markings: Ex ia IIC T4 Ga (–55 °C ≤ T_a ≤ +70 °C)

Table 8. Input Parameters

	HART
Voltage Ui	30 V
Current Ii	200 mA
Power Pi	0.9 W
Capacitance Ci	0.012 µF

Special Conditions for Safe Use (X):

1. When fitted with a transient suppression terminal block, the Model 2088 is incapable of passing the 500V isolation test. This must be taken into account during installation.
2. The enclosure may be made of aluminum alloy and given a protective polyurethane paint finish; however, care should be taken to protect it from impact or abrasion if located in a Zone 0 environment.

N7 IECEx Type n

Certificate: IECEx BAS 12.0071X

Standards: IEC60079-0:2011, IEC60079-11:2011

Markings: Ex ia IIC T4 Ga (–55 °C ≤ T_a ≤ +70 °C)

Special Conditions for Safe Use (X):

1. When fitted with a transient suppression terminal block, the Model 2088 is incapable of passing the 500V isolation test. This must be taken into account during installation.

NK IECEx Dust

Certificate: IECEx BAS12.0073X

Standards: IEC60079-0:2011, IEC60079-31:2008

Markings: Ex t IIIC T50 °C T50060 °C Da

Table 9. Input Parameters

	HART
Voltage Ui	30 V
Current Ii	24 mA

Special Conditions for Safe Use (X):

1. Cable entries must be used which maintain the ingress protection of the enclosure to at least IP66.
2. Unused cable entries must be filled with suitable blanking plugs which maintain the ingress protection of the enclosure to at least IP66.
3. Cable entries and blanking plugs must be suitable for the ambient temperature range of the apparatus and capable of withstanding a 7J impact test.

Technical Regulations Customs Union (EAC)

EM EAC Flameproof and Dust

Certificate: TC RU C-US.AA87.B.00534

Markings: Ga/Gb Ex db IIC T5/T6 X,
T5(-60 °C £ Ta £ +80°C), T6(-60°C £ Ta £ +70°C)

Special Condition for Safe Use (X):

1. See certificate for special conditions.

IM EAC Intrinsic Safety and Dust

Certificate: TC RU C-US.AA87.B.00534

Markings: 0Ex ia IIC T4 Ga X, T4(-55°C £ Ta £ +70°C)

Special Condition for Safe Use (X):

1. See certificate for special conditions.

Combinations

K1 combination of E1, I1 and N1
K5 combination of E5 and I5
K6 combination of E6 and I6
K7 combination of E7, I7, N7 and NK
KB combination of K5 and K6
KD ccombination of E1, I1, K5 and K6
KM combination of EM and IM

Conduit plugs and adapters

IECEx Flameproof and Increased Safety

Certificate: IECEx FMG 13.0032X

Standards: IEC60079-0:2011, IEC60079-1:2007, IEC60079-7:2006-2007

Markings: Ex d e IIC Gb

ATEX Flameproof and Increased Safety

Certificate: FM13ATEX0076X

Standards: EN60079-0:2012, EN60079-1:2007, IEC60079-7:2007

Markings: Ⓔx II 2 G Ex d e IIC Gb

Table 10. Conduit Plug Thread Sizes

Thread	Identification mark
M20 ×1.5	M20
1/2	1/2 NPT
G1/2	G1/2

Table 11. Thread Adapter Thread Sizes

Male thread	Identification mark
M20 × 1.5 – 6H	M20
1/2 – 14 NPT	1/2 – 14 NPT
3/4 – 14 NPT	3/4 – 14 NPT
Female thread	**Identification mark**
M20 × 1.5 – 6H	M20
1/2 – 14 NPT	1/2 – 14 NPT
G1/2	G1/2

Special Conditions for Safe Use (X):

1. When the thread adapter or blanking plug is used with an enclosure in type of protection increased safety “e” the entry thread shall be suitably sealed in order to maintain the ingress protection rating (IP) of the enclosure.
2. The blanking plug shall not be used with an adapter.
3. Blanking Plug and Threaded Adapter shall be either NPT or Metric thread forms. G1/2 thread forms are only acceptable for existing (legacy) equipment installations.

Dimensional Drawings

Figure 1. Rosemount 3051P with Optional Digital Display

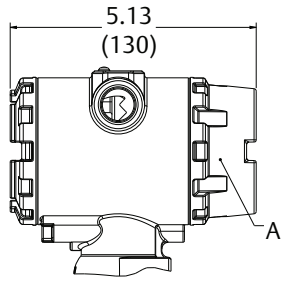

A. Digital display cover
B. 2 1/2–14 NPT conduit connection

Figure 2. Rosemount 3051P Process Connection

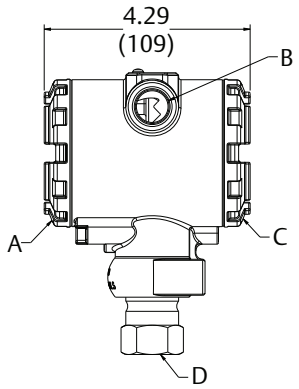

A. Field terminals
B. Conduit connection
C. Transmitter electronics
D. 1/2–14 NPT female connection

Figure 3. Rosemount 3051P Nameplate and Labels

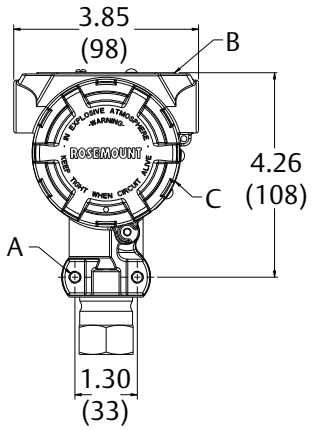

A. Bracket mounting holes (1/4–20 UNC)
B. Nameplate
C. Certification label (located on side)

Figure 4. Rosemount 3051P with Optional Pipe Mounting Bracket

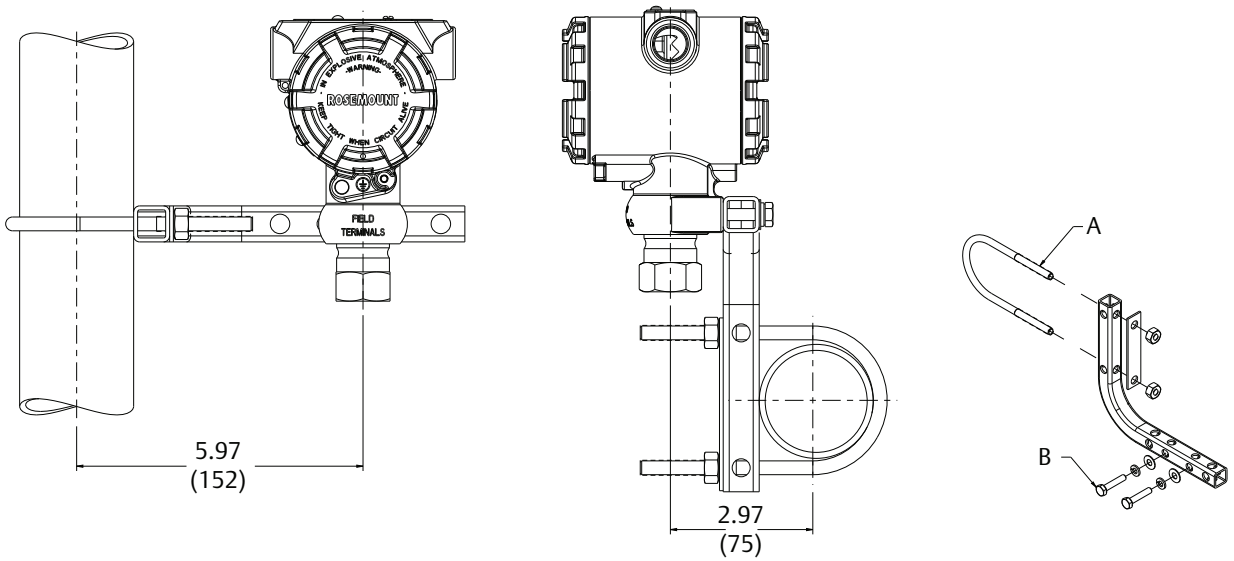

A. 2-in. U-bolt for pipe mounting (clamp shown)
B. $^{1}/_{4} \times 1^{1}/_{4}$ bolts for transmitter mounting
Dimensions are in inches (millimeters).

Figure 5. Rosemount 3051P with Optional Panel Mounting Bracket

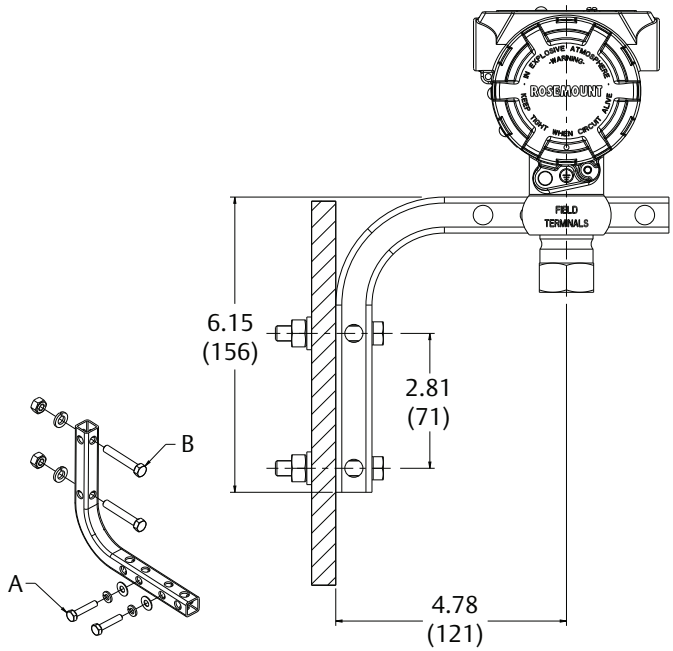

A. $^{1}/_{4} \times 1^{1}/_{4}$ bolts for transmitter mounting
B. $^{5}/_{16} \times 1^{1}/_{2}$ bolts for panel mounting (not supplied)
Dimensions are in inches (millimeters).

Options

Unless otherwise specified, transmitter is shipped as follows:

Standard configuration

Unless otherwise specified, transmitter is shipped as follows:

Engineering units	psi (all ranges)
4 mA (1 Vdc)	0 (engineering units)
20 mA (5Vdc)	Upper range limit
Output:	Linear
Flange type:	Specified model code option
Flange material:	Specified model code option
O-ring material:	Specified model code option
Drain/vent:	Specified model code option
LCD Display:	Installed or none
Alarm:	High
Software tag:	(Blank)

Custom configuration

If Option Code C1 is ordered, the customer may specify the following data in addition to the standard configuration parameters.

- Output Information
- Transmitter Information
- LCD Display Configuration
- Hardware Selectable Information
- Signal Selection
- and more

Refer to the Rosemount 3051 Configuration Data Sheet.

Tagging (3 options available)

- Standard SST hardware tag is permanently affixed on transmitter.
- Tag character height is 0.125 -in. (3, 18, mm), 84 characters maximum.
- Tag may be wired to the transmitter nameplate upon request, 85 characters maximum.
- Tag may be stored in transmitter memory (8 characters maximum).
- Software tag is left blank unless specified.
- HART Revision 5:8 characters
- HART Revision 7:32 characters

Optional Rosemount 306 Integral Manifolds

Factory assembled to Rosemount 3051P Transmitters. Refer to the Rosemount 306 Product Data Sheet for additional information.

Other seals

Refer to Rosemount DP Level Product Data Sheet for additional information.

Output information

Output range points must be the same unit of measure. Available units of measure include:

Pressure units		
torr	psf	cmH_2O@ 4 °C
atm	inH_2O	mH_2O@ 4 °C
Pa	inH_2O@ 4 °C	inHg
kPa	inH_2O@ 60 °F	mmHg
iMPa	ftH_2O	cmHg @ 0 °C
hPa	ftH_2O@ 4 °C	mHg @ 0 °C
mbar	ftH_2O@ 60 °F	g/cm^2
bar	mmH_2O	kg/m^2
ft^3	mmH_2O@ 4 °C	kg/cm^2

Display and Interface options

M5 Digital Display

- 2-Line, 8-Digit LCD for 4-20 mA HART
- Direct reading of digital data for higher accuracy
- Displays user-defined flow, level, volume, or pressure units
- Displays diagnostic messages for local troubleshooting
- 90-degree rotation capability for easy viewing

M4 Digital display with Local Operator Interface (LOI)

Global Headquarters
Emerson Automation Solutions
6021 Innovation Blvd.
Shakopee, MN 55379, USA
+1 800 999 9307 or +1 952 906 8888
+1 952 949 7001
RFQ.RMD-RCC@Emerson.com

North America Regional Office
Emerson Automation Solutions
8200 Market Blvd.
Chanhassen, MN 55317, USA
+1 800 999 9307 or +1 952 906 8888
+1 952 949 7001
RMT-NA.RCCRFQ@Emerson.com

Latin America Regional Office
Emerson Automation Solutions
1300 Concord Terrace, Suite 400
Sunrise, FL 33323, USA
+1 954 846 5030
+1 954 846 5121
RFQ.RMD-RCC@Emerson.com

Europe Regional Office
Emerson Automation Solutions Europe GmbH
Neuhofstrasse 19a P.O. Box 1046
CH 6340 Baar
Switzerland
+41 (0) 41 768 6111
+41 (0) 41 768 6300
RFQ.RMD-RCC@Emerson.com

Asia Pacific Regional Office
Emerson Automation Solutions Asia Pacific Pte Ltd
1 Pandan Crescent
Singapore 128461
+65 6777 8211
+65 6777 0947
Enquiries@AP.Emerson.com

Middle East and Africa Regional Office
Emerson Automation Solutions
Emerson FZE P.O. Box 17033
Jebel Ali Free Zone - South 2
Dubai, United Arab Emirates
+971 4 8118100
+971 4 8865465
RFQ.RMTMEA@Emerson.com

Linkedin.com/company/Emerson-Automation-Solutions

Twitter.com/Rosemount_News

Facebook.com/Rosemount

Youtube.com/user/RosemountMeasurement

Google.com/+RosemountMeasurement

Standard Terms and Conditions of Sale can be found on the Terms and Conditions of Sale page.
The Emerson logo is a trademark and service mark of Emerson Electric Co.
Saturn is a trademark of Emerson.
Coplanar is a trademark of Emerson.
Annubar is a trademark of Emerson.
Rosemount and Rosemount logotype are trademarks of Emerson.
All other marks are the property of their respective owners.
© 2017 Emerson. All rights reserved.