Damcos Valve Remote Control System

Complete, scalable and dedicated to marine needs

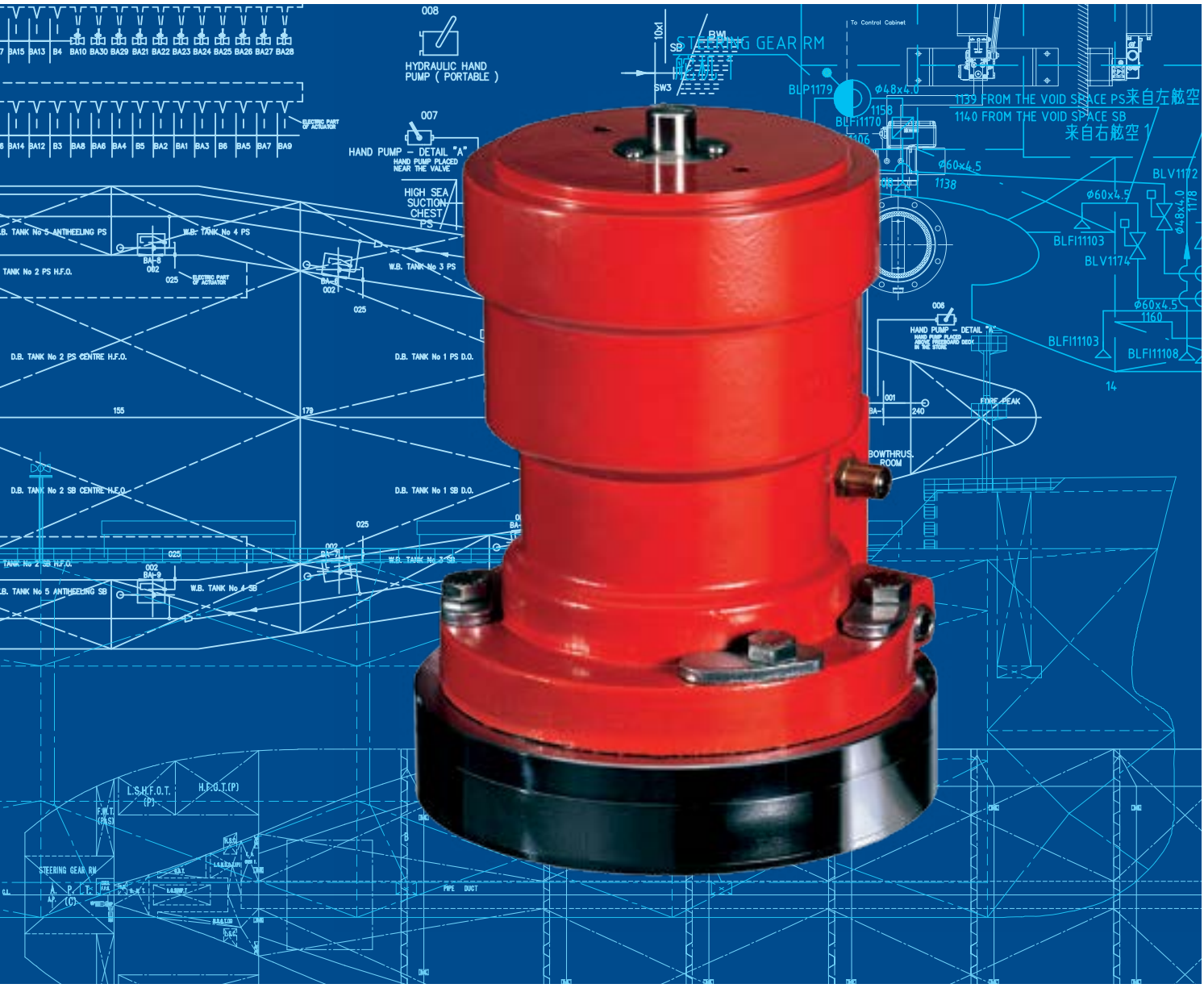

Damcos®

EMERSON™
Process Management

Delivering peace of mind

The reason we've spent the last 50 years thinking about valve remote control (VRC) is so you don't have to. Whether you're a shipyard or a shipowner, we realize there's a limit to the amount of time you can or should devote to this subject. So we've poured our energy into developing a VRC system so good, you'll scarcely notice it's there.

Reliability developed over five decades

Due to its proven reliability, the Damcos VRC system sets the standard for the marine industry, and we offer both a hydraulic and an electro-hydraulic version.

Both are complete one-stop solutions that reflect a deep appreciation of marine customer needs and industry standards.

And both systems are built on a cost-effective modular design that allows a high degree of customization while delivering performance on all fronts.

A familiarity with marine standards

The Damcos brand is part of Emerson's Marine Tank Management system.

Central to our success is a deep understanding of the marine industry. Naturally we comply with all local and international classification and certification authorities. However, beyond requirements, our systems are engineered specifically with the characteristics of life at sea in mind. Which is why we place such a premium on compact size, energy efficiency, minimal maintenance and, above all, dependability.

It's also why we insist on producing all our own components and ensure these insights are represented throughout our product portfolio, giving you not only functional support but, ultimately, total peace of mind.

Read more about valve remote control systems from Emerson.

Key benefits

- Unsurpassed quality and performance
- Meets all marine industry regulations
- Market's most compact actuator design
- System fully adaptable to your needs
- Minimal maintenance and running costs

Minimizing environmental impact

- Our hydraulic VRC offers low energy consumption compared to pneumatic systems.
- LPUs are designed for low energy consumption and require a minimum of oil.
- All our actuators and accessories can be disassembled into small pieces and recycled (98% recyclable).
- Our actuators have a long lifetime (30 years for BRC). If oil is kept clean and particle free, only the sealing needs to be changed occasionally.
- We comply with ISO9001 quality standards and ISO14001 environmental code.

Operating system – Centralized and flexible

Our operating system gives you a single-point overview of all valve and actuator positions throughout the vessel, and the same system is used for hydraulic and electro-hydraulic solutions.

Specifically, the system's Valve Control module is designed to manage all types of Damcos valve actuators in a marine environment.

Uniquely, our system allows you to control valves individually, letting you carry out maintenance without shutting down the whole system.

Compatible with other systems

We cater for both conventional mimic control as well as state-of-the-art touchscreen preferences, and our system can be fully integrated with a yard-specified marine tank management system.

Our Valve Control modules are simple and fast to install, and give you a high degree of flexibility and the ability to manage several parts of your valve system at one time.

Ultimately, our operating system offers intuitive and accurate centralized control, together with the ability to adjust parameters to your particular needs.

Power unit – Secure and scalable

For those seeking a hydraulic VRC system, our power unit is built on a standard modular platform, proven for its reliability and safety. As such, it's possible to configure and scale the unit as requirements demand.

A built-in PLC lets you digitally control all aspects of the power unit and optimize performance.

In the event that performance is reduced, an override backup system automatically engages, allowing you to keep operating ship valves.

Finally, the design of the unit allows for easy access to internal components, making repairs and testing fast and painless.

Overall the Damcos power unit is extremely safe, easy to install and support, and highly dependable.

Actuators – Compact and adaptable

Damcos actuators set the benchmark for marine industry valve operation and control.

The key is a patented design that uses a helical spline system to deliver high torque without the need for large size – only Damcos actuators offer these advantages. In addition, since there are no radial forces on the valve stem, the valve lasts longer and needs less maintenance.

Our actuators are suitable for the most demanding of conditions, from high vibration to severe environments.

Built-in quality

We provide actuators for all types of quarter-turn and linear valves. Damcos actuators operate at a standard working pressure of 135 bar and maintain a constant high-torque output throughout the 90 degree rotation.

The actuators are equipped with a direct visual position indicator. It's also possible to adjust actuators without the need for demounting.

Damcos actuators

BRC

Double-acting balanced rotary actuator; quarter-turn.

BRCF

Single-acting spring-return actuator; quarter-turn. The spring provides fail-safety.

KC

Linear double-acting actuator. Comes with a direct position indicator and presents no external moving parts during operation.

KF/KFR

Linear single-acting spring-closing actuator. Equipped with a unique emergency system.

The Damcos BRCF HT is a small sized yet powerful actuator for large valves requiring very high torque. The BRCF HT provides high torque ***when and where it's needed; at end-closing****, due to the unique spring piston design. The actuator has a high-quality compact design, a long lifetime and is easy to install.*

Damcos actuators series overview

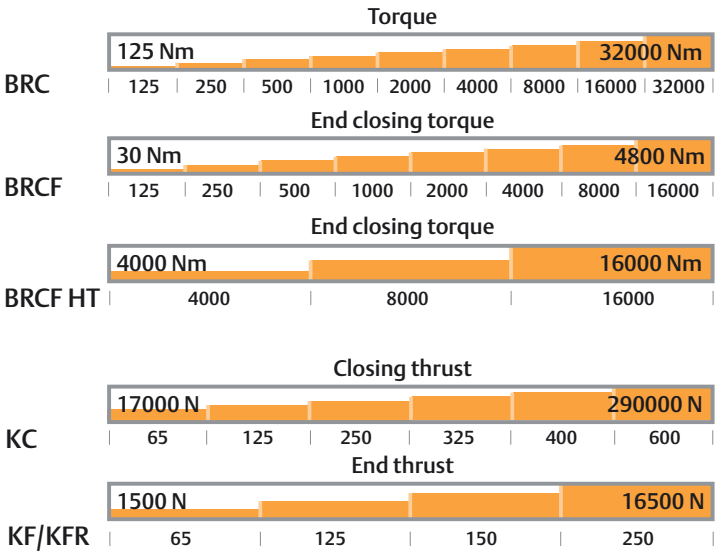

Control cabinet – Intelligent and lightweight

A hydraulic VRC system is supplied with a standardized solenoid valve cabinet, able to support up to 120 valve controls per cabinet.

Each valve can be isolated and independently controlled, thereby reducing downtime and making repairs easier.

The solenoid valves themselves are designed to minimize leakage.

High-spec construction

In terms of functionality, we offer premium volumetric position indicators (VPIs) as standard, including temperature compensation (TC) and pressure and temperature compensation (PTC), for pinpoint accuracy.

The cabinet hosts controllers as well as intelligent and standard I/O modules enabling all tank-related functions. Due to this kind of distributed intelligence, the response time is fully optimized. Moreover, with a 10" Damcos Vision touchscreen mounted on the front of the cabinet, you will have a complete, stand-alone and intelligent control system that can also act as a backup for the workstations.

All this combines to ensure our solenoid cabinet gives a fast start up, reliable operation, high service performance and allows emergency operation from the cabinet.

Even our smallest actuators can be powered locally thanks to our ultra compact LPUMs.

LPU and LPUM – Economical and versatile

Our electro-hydraulic VRC system works in combination with a Local Power Unit, which sits on the valve actuator itself. The main advantage of opting for this solution is the cost and space savings gained by eliminating the need for hydraulic piping, solenoid cabinets and a power unit.

Our LPU is exceptionally small, lightweight and works with all types of Damcos actuators, including our largest models.

Stand-alone performance

Each unit is fully equipped for local operation, with an oil level sight-glass, adjustable flow (250-1000ml /min) and external indicators.

Contained within the unit is a patented hydraulic pump able to perform at low speed, minimizing energy consumption without compromising operational performance.

Like all Damcos products, our LPUs require minimal maintenance and ensure maximum safety, with emergency operation always possible.

Benefits for shipowners

- Highly reliable system, tried-and-tested in fleets around the world.
- Offers a high degree of customization, letting you adapt the system to your specifications.
- Unique, patented design minimizes operating and maintenance costs.
- Worldwide sales and service network.
- High performance and compact size gives more space for cargo.
- Exceptionally safe and environmentally sound.

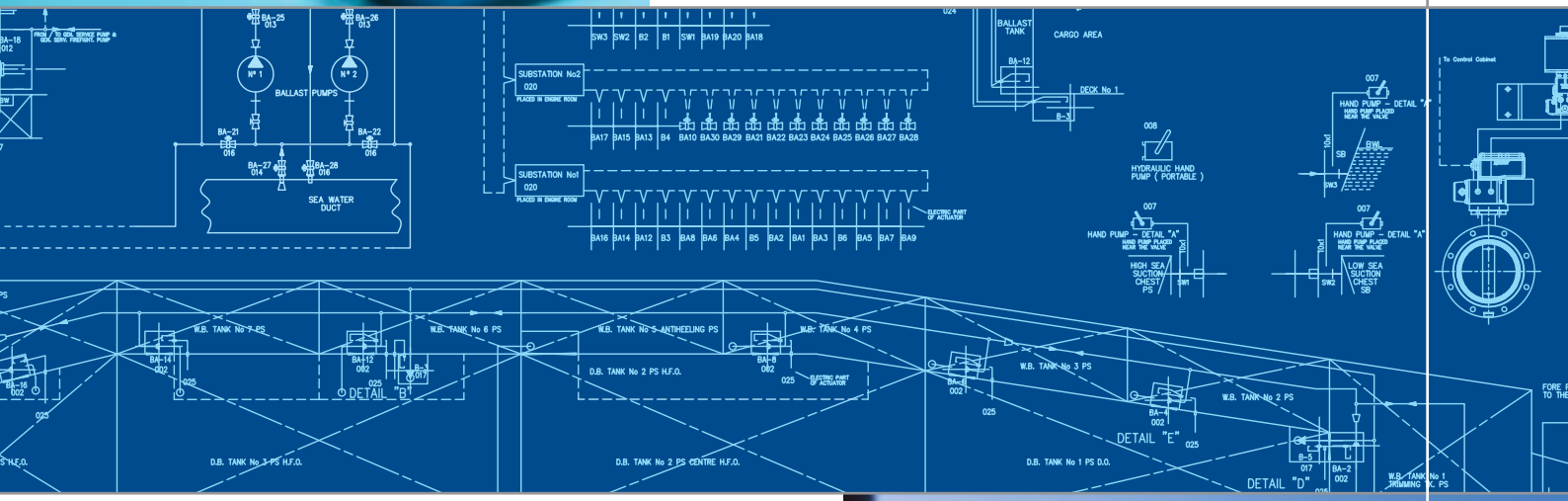

Benefits for shipyards

- The market's most compact design, grants significant space savings and affords new ship design possibilities.
- Customization provides flexibility and makes implementation easier.
- Unlimited mounting positions and vast application know-how make installation and commissioning fast and painless.

Two proven systems

Hydraulic VRC

Highlights: *Industry-leading actuators · Minimal energy and oil use · Compatible with other control systems · Safe and durable*

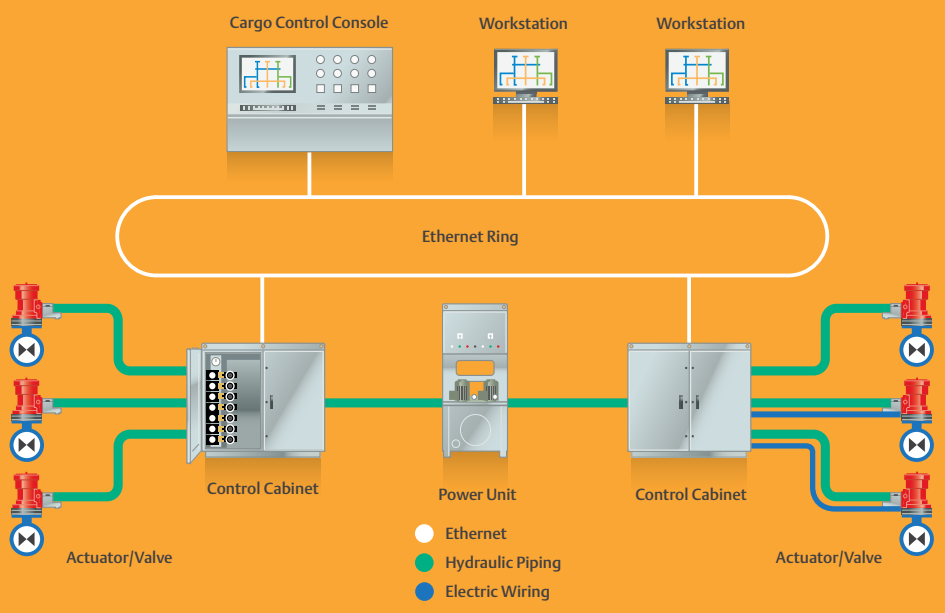

For those seeking reliability and accuracy, the Damcos hydraulic VRC is the perfect solution. Our system can be used on all types of ships and is available as a stand-alone system or as part of an extensive marine tank management system. The system itself consists of a power unit, solenoid cabinet, operating system and valve actuators.

This tried-and-tested design makes operation simple, efficient and cost effective, minimizing the amount of oil needed. One particular highlight is the patented design of our actuators. These are by far the most compact of their kind, delivering exceptionally high torque while minimizing size and weight. Finally, in environmentally conscious times, each aspect of our VRC system is designed to minimize consumption through operating efficiency and intelligent design.

Electro-hydraulic system

Highlights: *No hydraulic piping needed · Minimal energy and oil use · Lightweight and small LPUs · Compatible with hydraulic VRC · Safe and durable*

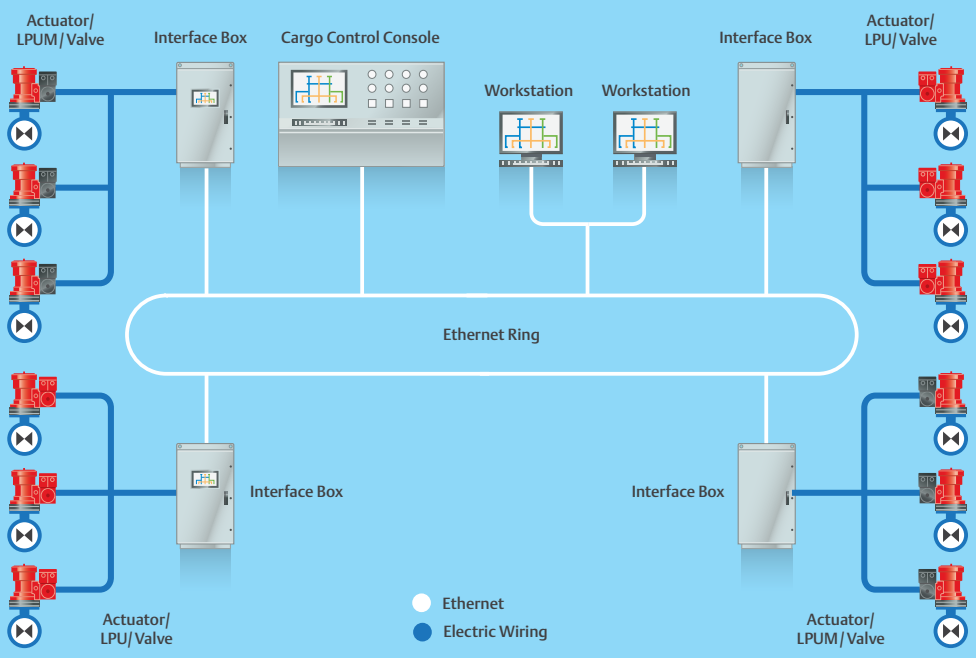

The Damcos integrated electro-hydraulic VRC system is versatile and economical, while delivering the high-end performance marine customers need. The system requires only electrical power and no hydraulic piping, keeping installation costs down. In addition, the system can be used on all ship types, except tankers. For hazardous environments, our EEx-approved LPUs comply with ATEX directive 94/9/EC.

Rather than a solenoid-based system, the electro-hydraulic version operates actuators by means of a Local Power Unit (LPU), mounted directly to the actuator. This design requires only electrical power to the LPU. The total electro-hydraulic system is comprised of an interface box, valves, actuators and LPUs. Beyond stand-alone use, it's possible to integrate an electro-hydraulic VRC system with a marine tank management system or to use it in conjunction with a hydraulic VRC system.

Expertise within Marine Tank Management

Emerson Process Management (emersonprocess.com), an Emerson business, is a leader in helping businesses automate their production, processing and distribution in the chemical, oil and gas, refining, power, water and wastewater treatment, metals and mining, pulp and paper, food and beverage, pharmaceutical and other industries.

Emerson's Marine Tank Management division is part of Emerson Process Management. Our expertise covers integrated tank management systems, valve remote control, cargo tank gauging, ballast, fuel oil and service tank monitoring and draft measurement for all types of ships and offshore units.

Our brands – Damcos, LevelDatic, MAS2600, Rosemount TankRadar – have served marine customers for more than 30 years and together represent the foremost thinking within marine tank management. What really sets us apart is our dedication to the marine sector and engineering excellence. This is reflected in all aspects of our offering, from design and production, through to application know-how and global after-sales support.

www.cbc.dk

For contact information, addresses and facts about our global sales and service network, please visit:

www.emersonprocess.com/mtm

© Damcos A/S, 2015.

The Emerson logo is a trademark and service mark of Emerson Co. Damcos trademark and logotype are registered trademarks of Damcos A/S. LevelDatic is a trademark of Rosemount TankRadar AB. Rosemount TankRadar is a registered trademark of Rosemount TankRadar AB. Rosemount and Rosemount logotype are trademarks of Rosemount Inc. All rights reserved. The contents of this publication are presented for informational purposes only, and while efforts have been made to ensure their accuracy, they are not to be construed as warranties or guarantees, expressed or implied, regarding the products or services described herein or their use or applicability. All sales are governed by our terms and conditions, which are available upon request. We reserve the right to modify or improve the designs or specifications of our products at any time without notice. Emerson Process Management accepts no responsibility for any errors that may appear in this publication.

Ed1 RevC September 2015

EMERSON
Process Management