Product Data Sheet
January 2013
SD 0312-2E02

Damcos™ BRCF 250 - 60 bar

Hydraulic single-acting balanced rotary actuator 90° (Quarter-turn) fail-safe

Damcos™

EMERSON™
Process Management

Main Data

Working pressure	60 bar
Burst test	675 bar
Total dry weight incl. mounting set (2.4 kg)	13.6 kg
Oil displacement	0.050 l
Temperature range	-20°C to +80°C
Rotation	90° ±1°
Hydraulic media and viscosities	We recommend acid-free hydraulic oil. Viscosity range: 15-200 cSt. For recommended brands and for other media than oil please refer to separate data sheet.

Main Dimensions

Actuator shown in closed (fail-safe) position

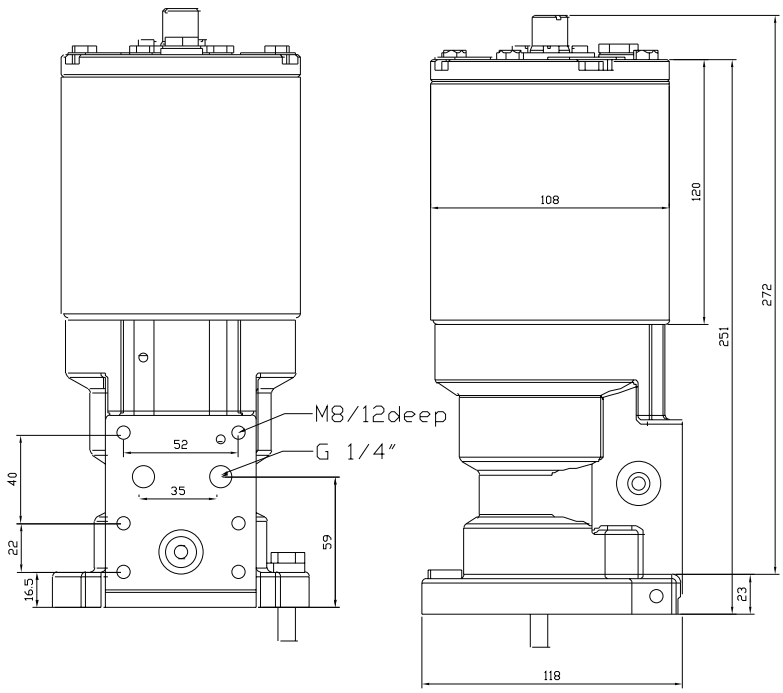

All dimensions in mm

Valve adaption:

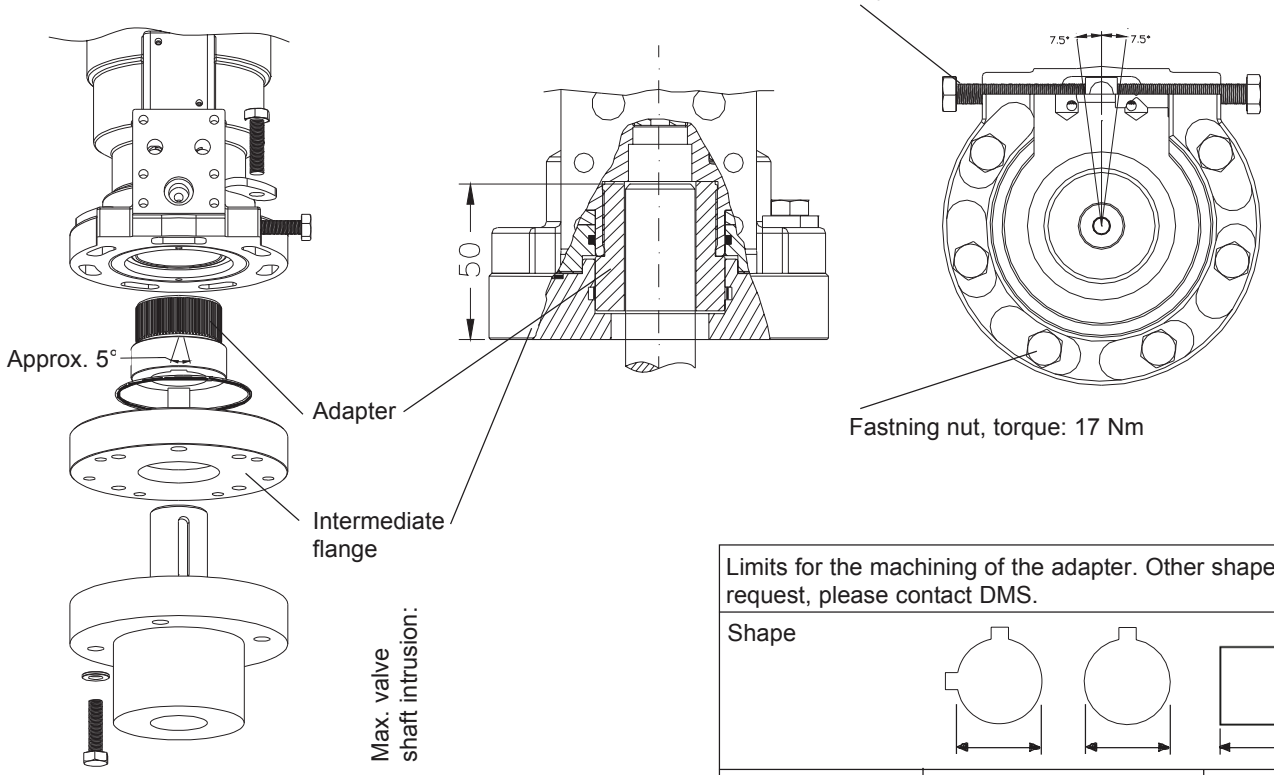

All dimensions in mm

Limits for the machining of the adapter. Other shapes on request, please contact DMS.

Shape

Machined acc. to:	DIN 6885	DIN 79
mm (max.):	25	24

Performance

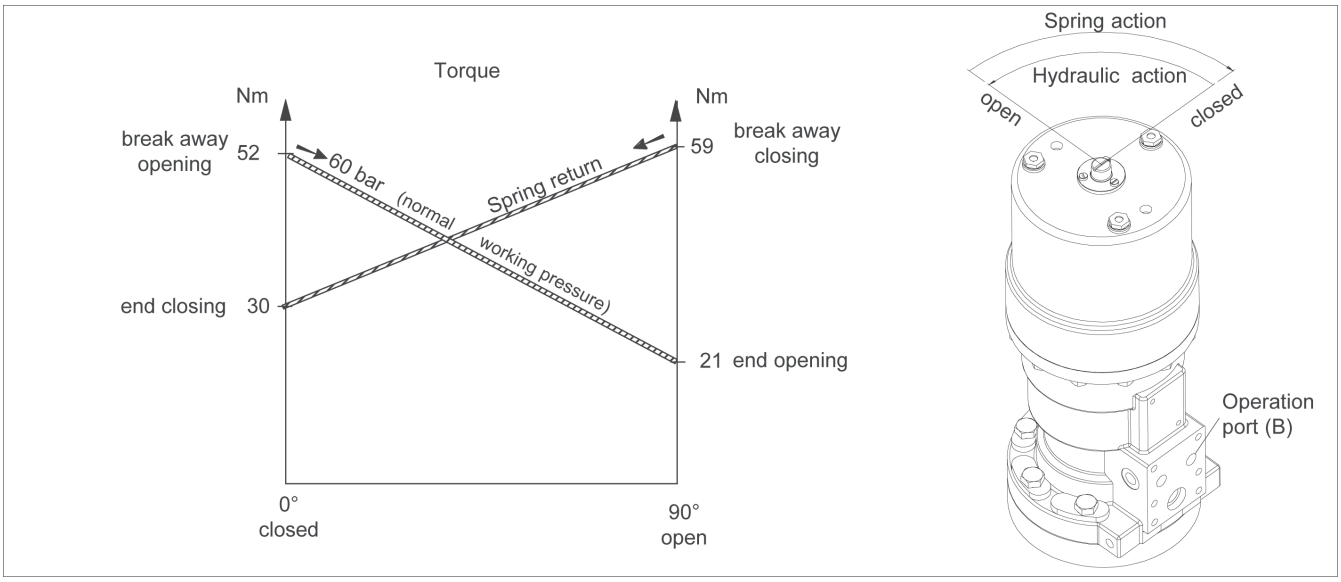

©2013 Emerson Process Management. All rights reserved.

The Emerson logo is a trademark and service mark of Emerson Electric Co. Damcos® and the Damcos logotype are registered trademarks of Damcos A/S.

The contents of this publication are presented for information purposes only, and while effort has been made to ensure their accuracy, they are not to be construed as warranties or guarantees, expressed or implied, regarding the products or services described herein or their use or applicability. Standard Terms and Conditions of Sale can be issued by contacting Damcos A/S. We reserve the right to modify or improve the designs and specifications of our products at any time without notice.

Emerson Process Management
Damcos A/S
Aaderupvej 41
DK-4700 Naestved
T +45 5578 7200
F +45 5578 7272

www.EmersonProcesss.com/mtm

Damcos™

EMERSON™
Process Management