Instruction Manual
P/N MMI-20020739, Rev. AB
October 2012

Micro Motion®
Model 3100 Relays

Installing Relays

Micro Motion®

EMERSON™
Process Management

©2012 Micro Motion, Inc. All rights reserved. The Micro Motion and Emerson logos are trademarks and service marks of Emerson Electric Co. Micro Motion, ELITE, MVD, ProLink, MVD Direct Connect, and PlantWeb are marks of one of the Emerson Process Management family of companies. All other trademarks are property of their respective owners.

Installing Relays

2.1 About this document

This document explains how to install relay modules for the Series 3000 device. Relays are used to connect the device's discrete outputs to control devices.

2.2 Relay types

Two types of relay can be used with the Series 3000:

- The Model 3100 relay module supplied by Micro Motion. The Model 3100 contains three solid-state relays.
- User-supplied relay or relay module compatible with the Series 3000 discrete outputs (see Section 2.5.1).

2.2.1 Power

The Model 3100 relay module is powered by the Series 3000 discrete outputs.

User-supplied relays can be powered by the Series 3000 discrete outputs if both of the following are true:

- They are solid-state relays, *and*
- The relay input requirements are met by the discrete output characteristics (see Section 2.5.1).

If either of these conditions is not true, user-supplied relays must be powered externally.

2.3 Hazardous area installations

If you are installing the relay or relay module in a hazardous area, review the information in this section.

2.3.1 Model 3100 relays

ATEX

Model 3100 relay modules are suitable for installation in Zone 2, complying with ATEX Directive (94/9/EC) for Group II, Category 3G, according to CENELEC standard prEN 50021:1998 and marked as:

- EEx nV II T4
- KEMA 97 ATEX 4940 X
- Ambient temperature –20 to +60 °C (–4 to +140 °F)

To comply with hazardous area requirements:

- Model 3100 relay modules must be mounted into a suitable and classified enclosure that provides ingress protection of at least IP4X according to EN 60529, taking into account the environmental conditions into which the equipment will be installed.
- The external metal parts of the relay module (heat sinks) must be connected to the potential-equalizing system within the hazardous area.

UL and CSA

Model 3100 relay modules are suitable for installation in Class I, Division 2, Groups A, B, C, and D.

Note: For CSA compliance, the relay module must be installed in a suitable enclosure where the final combination is subject to acceptance by the Canadian Standards Association (CSA).

The Model 3100 Relay Assembly must be installed into an end-use enclosure or panel with the proper enclosure Type Ratings for the location per the National Electrical Code, Articles 500 and 501. Additionally, the end-use enclosure or panel must require the use of a tool in order to access the fuses on the Model 3100. A switch suitable for the location where the device is installed must be provided and installed to remove power to the fuse(s) before replacement.

⚠ WARNING

Explosion Hazard.

Substitution of any component may impair suitability for Division 2.

Do not remove or replace fuses while circuit is live unless the area is known to be free of ignitable concentrations of flammable substances.

Do not disconnect while the circuit is live or unless the area is known to be free of ignitable concentrations of flammable substances.

2.3.2 User-supplied relays

User-supplied relays to be used for Zone 2 applications must be certified as Category 3 equipment.

2.4 Replacing relays

You may not replace a defective relay separately. If an individual relay is defective, you must replace the entire relay module.

This requirement applies to both the Model 3100 and to user-supplied relays, and to both hazardous and non-hazardous areas.

2.5 Using relays with the Series 3000 device

A relay is used to connect the Series 3000 device’s discrete outputs to control devices.

2.5.1 Series 3000 discrete outputs

The Series 3000 has three discrete outputs, which can be configured for specific application requirements. The outputs have the following characteristics:

- Polarity:
  - Active high or active low
  - Software selectable
- Current:
  - Sourcing at 5.6 mA, V_{out} = 3 VDC minimum
  - Sinking up to 500 mA at 30 VDC supply maximum

Figure 2-1 shows a diagram of a typical discrete output circuit.

Figure 2-1 Discrete output circuit

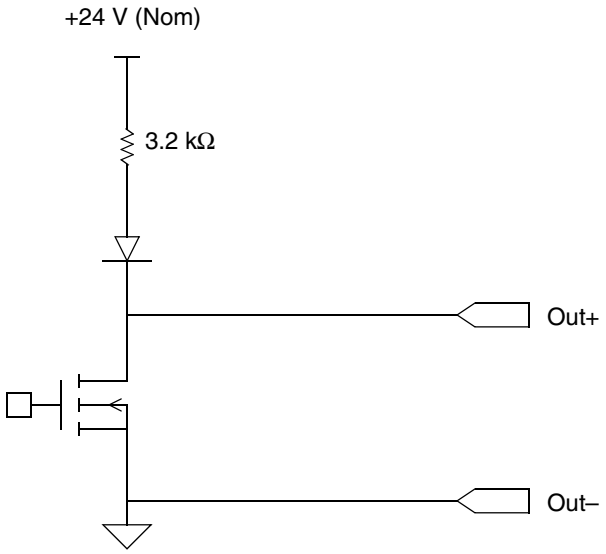

2.6 Installing the Model 3100 relay module

Follow these steps to install a Model 3100 relay module.

Step 1 Mount relay module

Mount the supplied relay module to a DIN rail. The relay module accommodates various standard rail types. See Figure 2-2.

Figure 2-2 Relay module dimensions

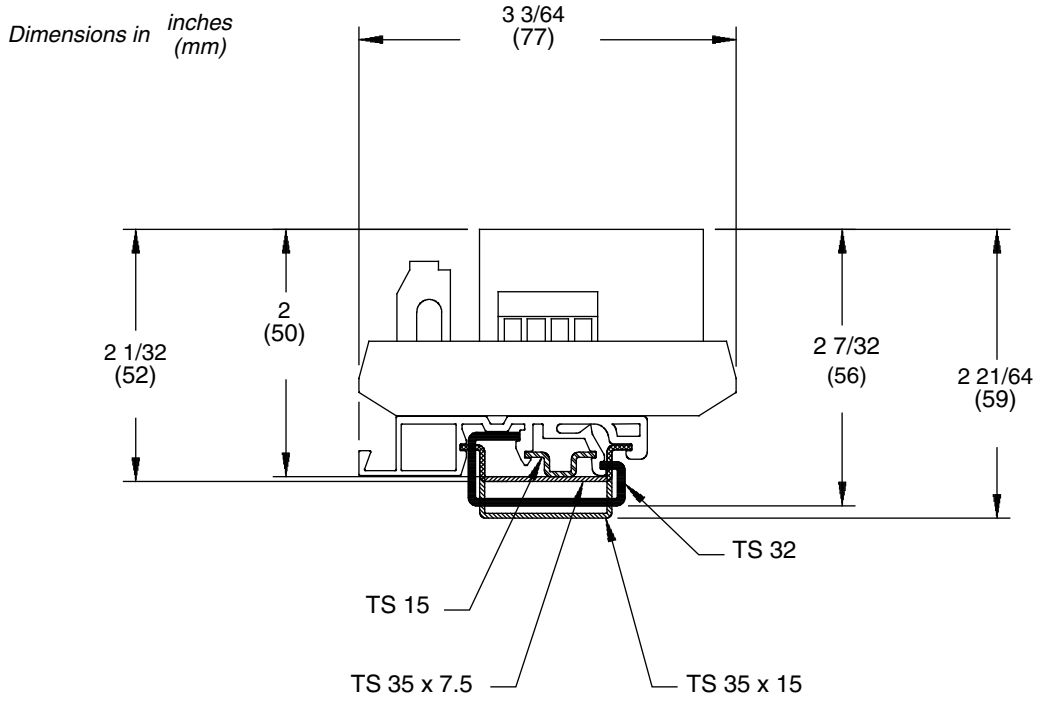

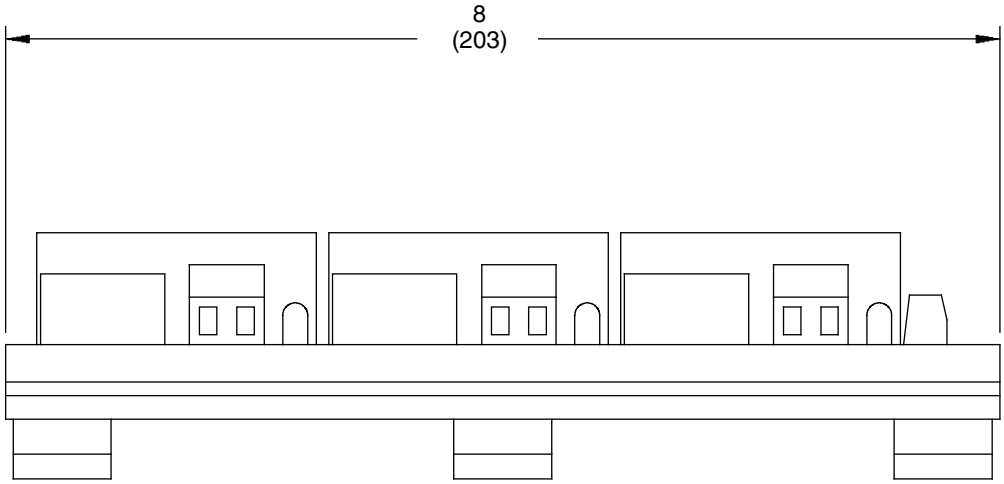

Step 2 Connect discrete output terminals to relays

Follow the steps below to connect the transmitter/controller's discrete output wiring terminals to one, two, or three relays.

⚠ WARNING

Shock Hazard.

Improper installation of wiring, or installation with power supply on, can cause electric shock or property damage.

For personal and system safety:

- Shut off power before installing wiring.
- Make sure the installation meets or exceeds local code requirements.
- Install relays and wiring in accordance with the illustrations in these instructions.
- Install relays and wiring where ambient temperature remains between –4 and +140 °F (–20 and +60 °C).

1. Use the following wire sizes:
   - Model 3300 or Model 3500: 24 to 16 AWG (0,25 to 1,5 mm^2)
   - Model 3350 or Model 3700: 22 to 16 AWG (0,35 to 1,5 mm^2)
2. Connect the wires between the transmitter/controller terminals and the relay terminals as shown in Table 2-1 and in the following diagrams:
   - Model 3300 or Model 3500 with screw-type or solder-tail connectors: see Figure 2-3
   - Model 3300 or Model 3500 with I/O cables: see Figure 2-4
   - Model 3350 or Model 3700: see Figure 2-5

Table 2-1 Transmitter/controller terminals and Model 3100 terminals

Transmitter/controller terminals				
Model 3300 or Model 3500		Model 3350 or Model 3700		
I/O cables or I/O terminal block	Screw-type or solder-tail terminals	Gray terminal block	Terminal function	Model 3100 terminals
19	a 14	20	Return	a 14
18	c 14	18	DO1	c 14
20	c 16	17	DO2	c 16
22	c 18	16	DO3	c 18

Figure 2-3 Model 3300 or Model 3500 to Model 3100 – Screw-type or solder-tail connector

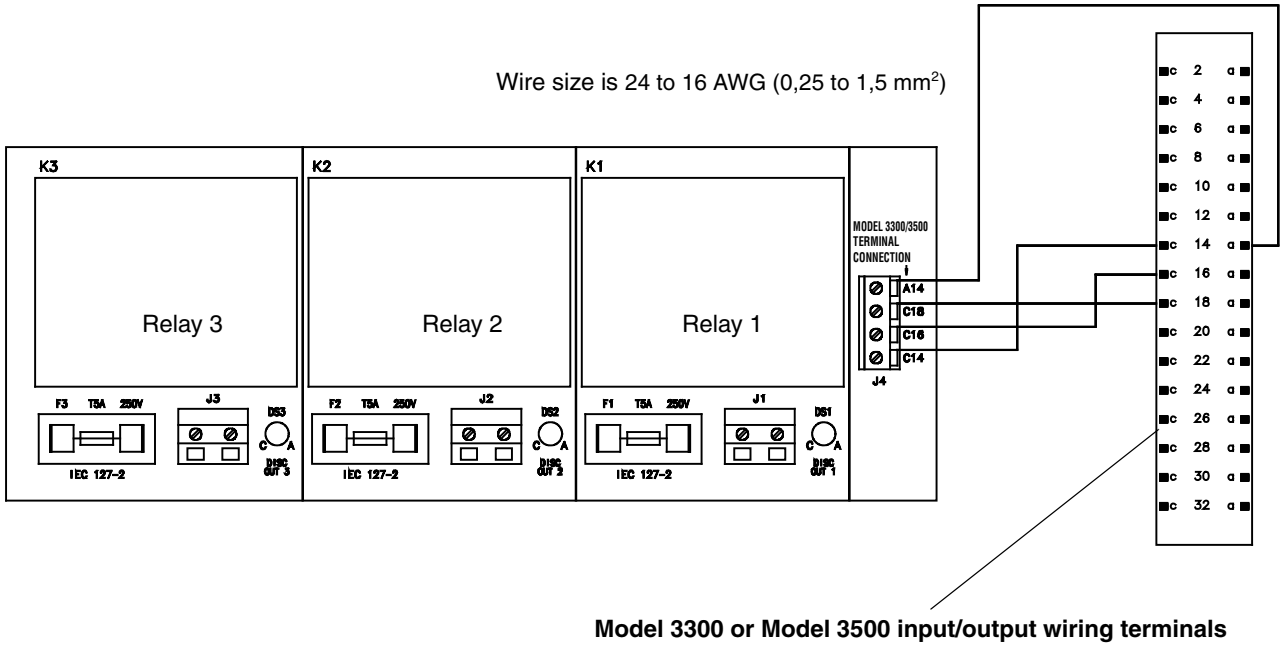

Figure 2-4 Model 3300 or Model 3500 to Model 3100 – I/O cables

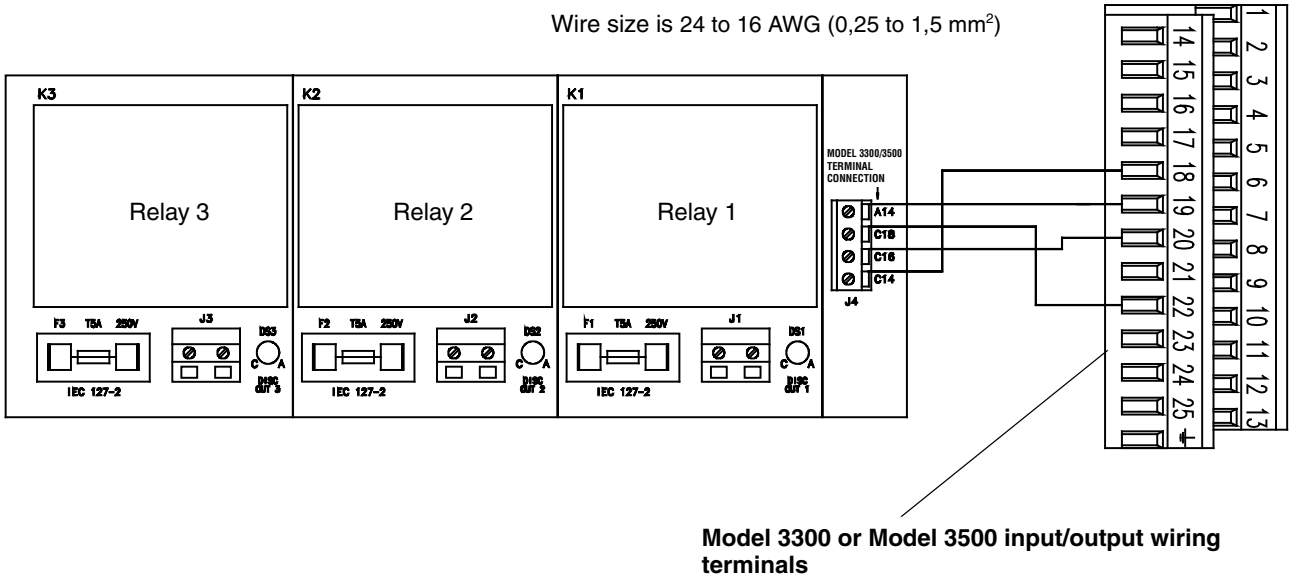

Figure 2-5 Model 3350 or Model 3700 to Model 3100

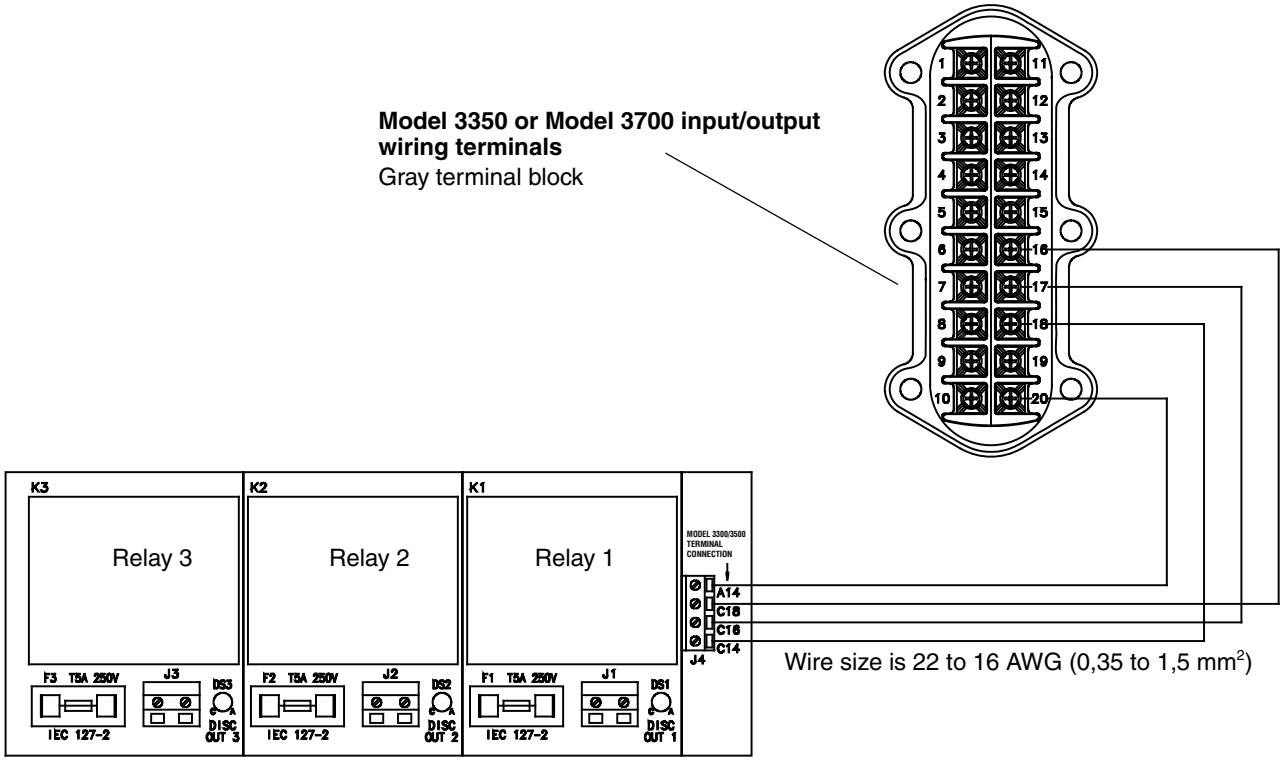

Step 3 Connect relay wiring to control devices

Follow the steps below to connect one, two, or three relays to a control device.

1. Wire size must be between 22 and 16 AWG (0,35 to 1,5 mm^2).
2. Connect the wires between the relay module and the control device as shown in the diagrams:
   - If the relay loads have an AC power supply, see Figure 2-6. AC output terminals do not have polarity.
   - If the relay loads have a DC power supply, see Figure 2-7. DC output terminals have polarity.

Figure 2-6 Model 3100 relay module to control devices – AC power

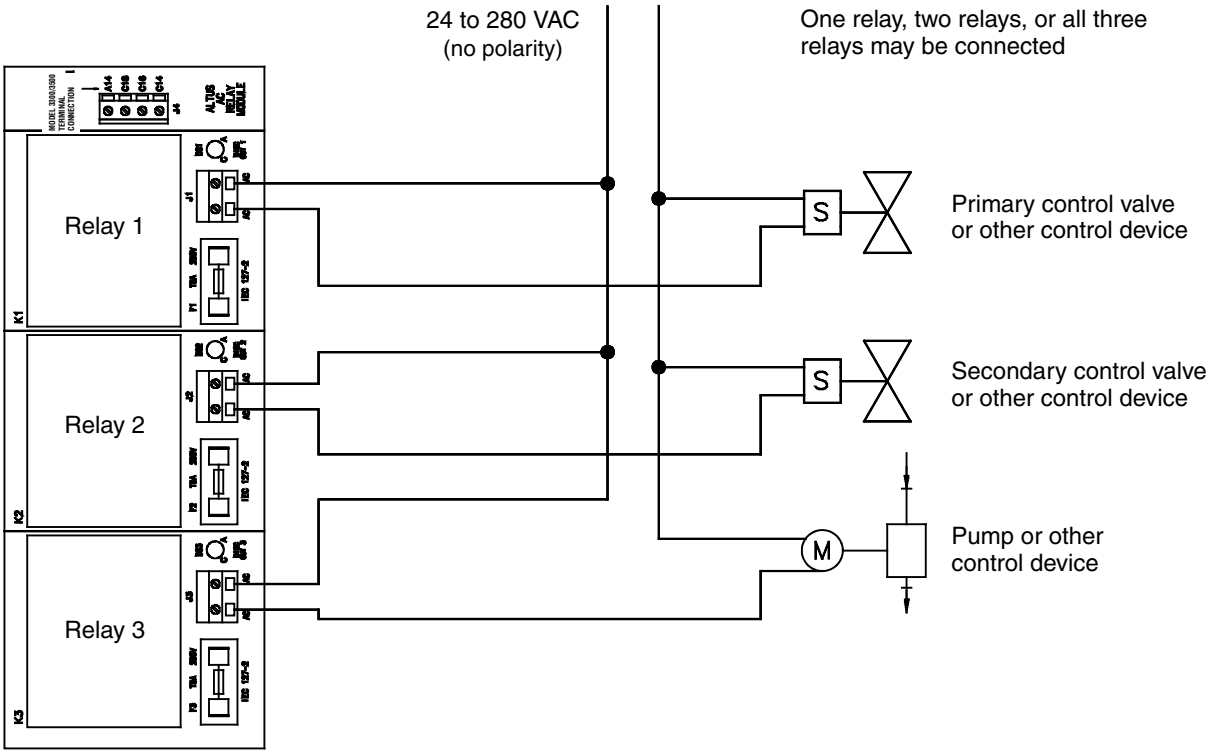

Figure 2-7 Model 3100 relay module to control devices – DC power

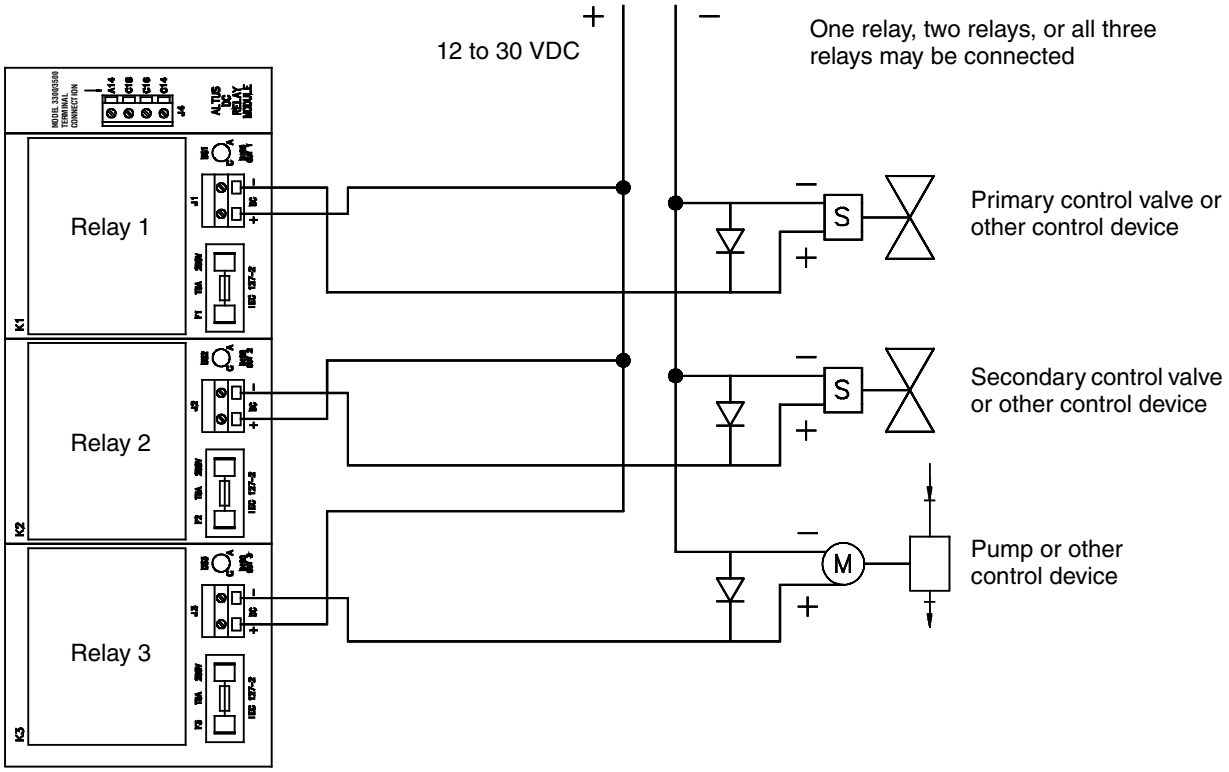

2.7 Installing user-supplied relays

Follow these steps to install user-supplied relays.

Step 1 Connect discrete output terminals to relays

Follow the steps below to connect the transmitter/controller's discrete output wiring terminals to one, two, or three relays.

⚠ WARNING

Shock Hazard.

Improper installation of wiring, or installation with power supply on, can cause electric shock or property damage.

For personal and system safety:

- Shut off power before installing wiring.
- Make sure the installation meets or exceeds local code requirements.
- Install relays and wiring in accordance with the illustrations in these instructions.
- Install relays and wiring where ambient temperature remains between –4 and +140 °F (–20 and +60 °C).

1. Use the following wire sizes:
   - Model 3300 or Model 3500: 24 to 16 AWG (0,25 to 1,5 mm^2)
   - Model 3350 or Model 3700: 22 to 16 AWG (0,35 to 1,5 mm^2)
2. Connect the wires between the transmitter/controller and the relay as shown in Table 2-2 and in the following diagrams:
   - Model 3300 or Model 3500 with screw-type or solder-tail connectors: see Figure 2-8
   - Model 3300 or Model 3500 with I/O cables: see Figure 2-9
   - Model 3350 or Model 3700: see Figure 2-10

Table 2-2 Transmitter/controller terminals for user-supplied relays

Transmitter/controller terminals			
Model 3300 or Model 3500		Model 3350 or Model 3700	
I/O cables or I/O terminal block	Screw-type or solder-tail terminals	Gray terminal block	Terminal function
19	a 14	20	Return
18	c 14	18	DO1
20	c 16	17	DO2
22	c 18	16	DO3

Figure 2-8 Model 3300 or Model 3500 to user-supplied relay – Screw-type or solder-tail connector

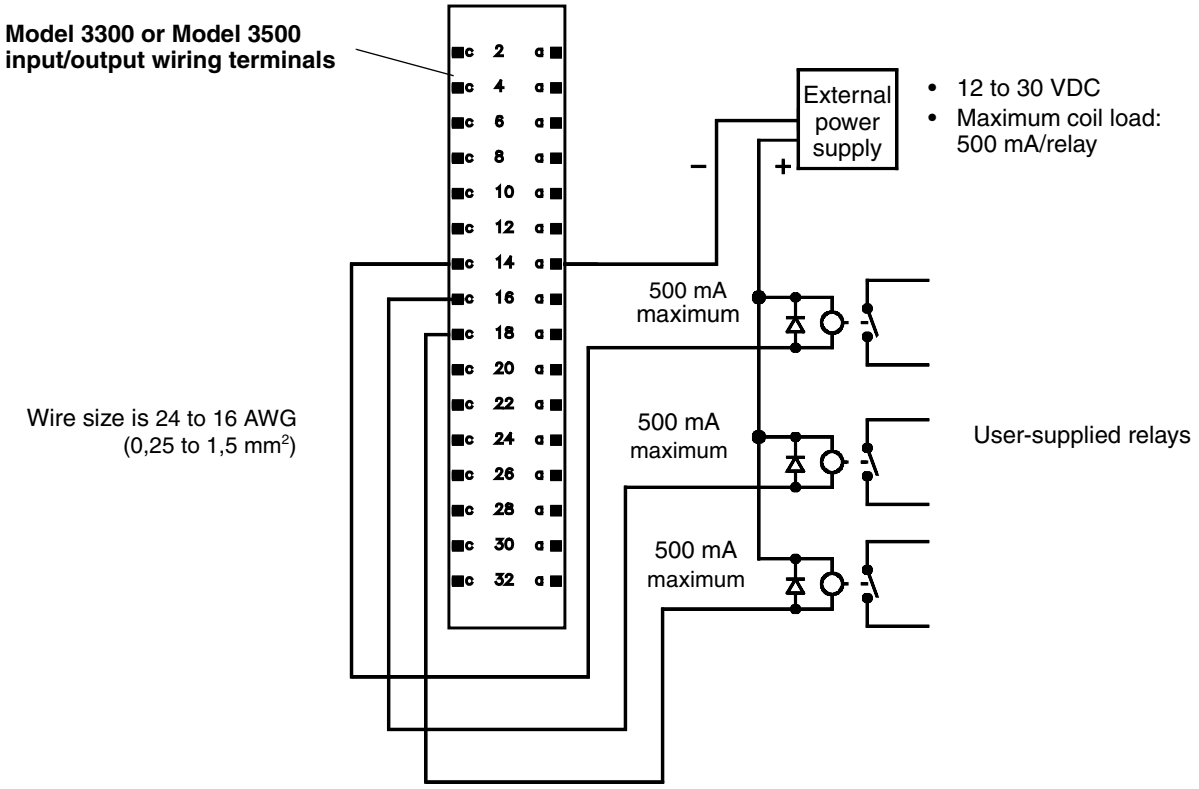

Figure 2-9 Model 3300 or Model 3500 to user-supplied relay – I/O cable

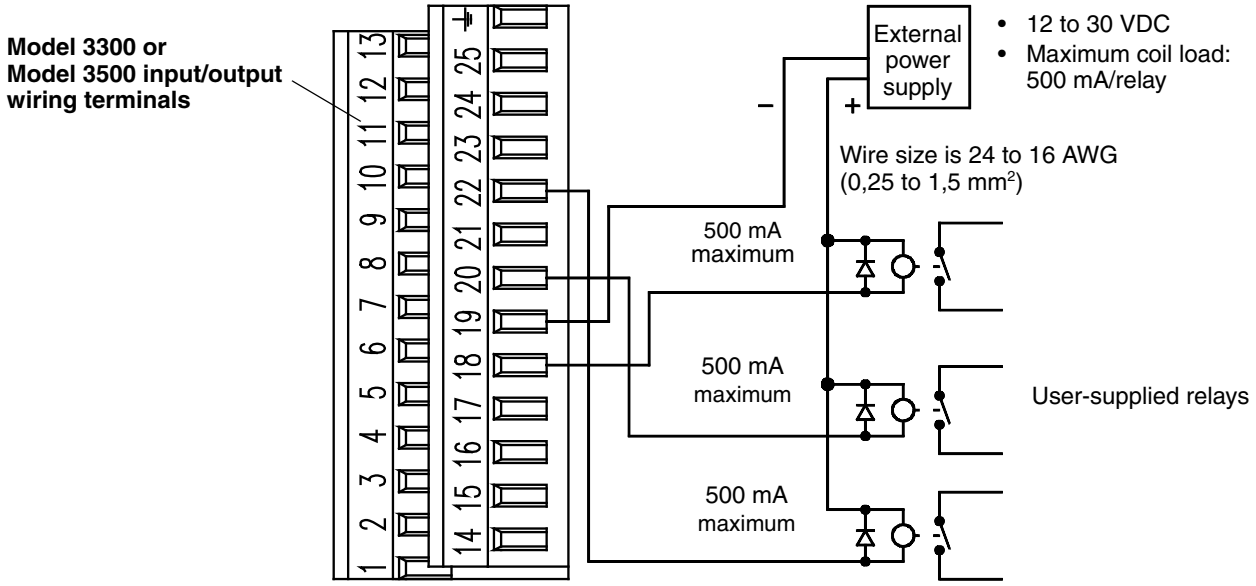

Figure 2-10 Model 3350 or Model 3700 to user-supplied relay

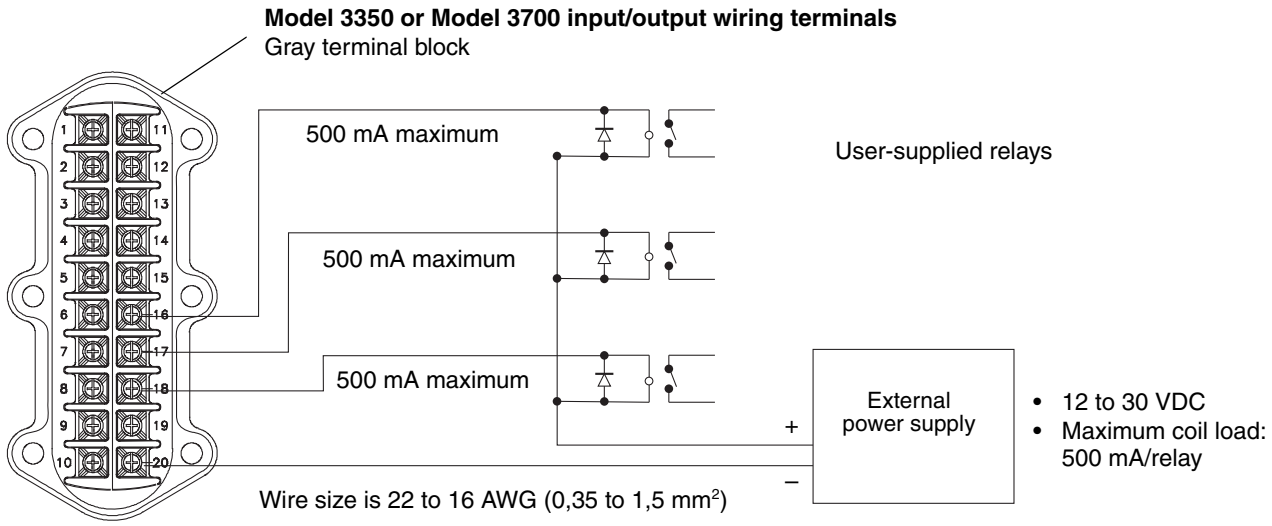

Step 2 Connect relay wiring to control devices

The method used to connect the relay to the control device depends on the function the relay will perform. For an illustration of typical wiring for a 2-stage batch application, see Figure 2-11.

Figure 2-11 User-supplied relay to control device: 2-stage batch application

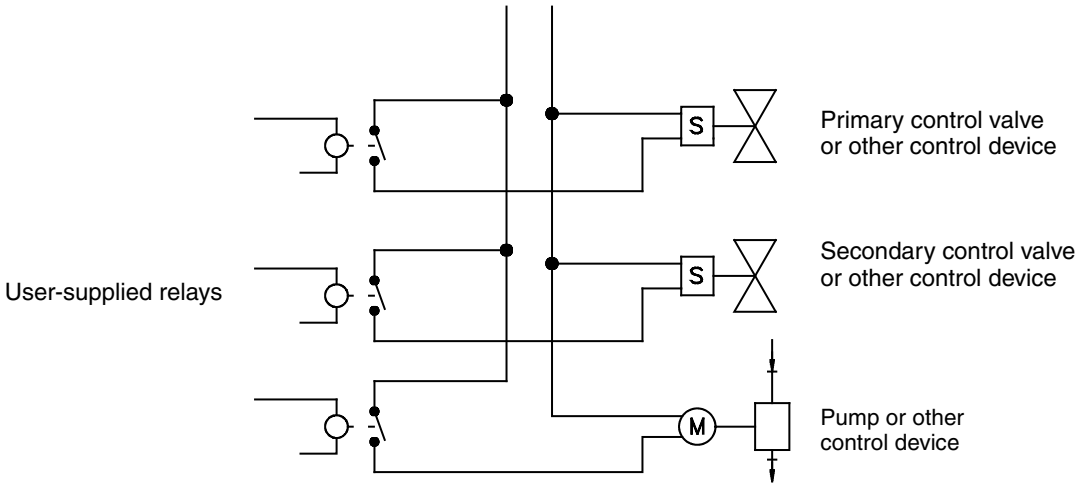

©2012 Micro Motion, Inc. All rights reserved. P/N MMI-20020739, Rev. AB

For the latest Micro Motion product specifications, view the PRODUCTS section of our web site at www.micromotion.com

Micro Motion Inc. USA
Worldwide Headquarters
7070 Winchester Circle
Boulder, Colorado 80301
T +1 303-527-5200
+1 800-522-6277
F +1 303-530-8459

Micro Motion Europe
Emerson Process Management
Neonstraat 1
6718 WX Ede
The Netherlands
T +31 (0) 318 495 555
F +31 (0) 318 495 556

Micro Motion Asia
Emerson Process Management
1 Pandan Crescent
Singapore 128461
Republic of Singapore
T +65 6777-8211
F +65 6770-8003

Micro Motion United Kingdom
Emerson Process Management Limited
Horsfield Way
Bredbury Industrial Estate
Stockport SK6 2SU U.K.
T +44 0870 240 1978
F +44 0800 966 181

Micro Motion Japan
Emerson Process Management
1-2-5, Higashi Shinagawa
Shinagawa-ku
Tokyo 140-0002 Japan
T +81 3 5769-6803
F +81 3 5769-6844

Micro Motion®

recycled paper

EMERSON™
Process Management