Synthetic Oil Made More Consistent Using Micro Motion® Coriolis Flowmeters

RESULTS

- Increased resistance to vibration and no re-zeroing the meters
- More consistent quality of finished product
- Eliminated down time

APPLICATION

A chemical company produces synthetic oil with specific finished product viscosity in a high-vibration environment. In polymerization, the first stage of production, an intermediate product is mixed in proportion with two catalyst feeds. Each feed line has a flowmeter and a flow rate of 17 to 30 pounds per hour (7.7 to 13.6 kg/hr).

CHALLENGE

The existing flowmeters were extremely sensitive to vibration, which caused the meter zeros to drift. The manufacturer frequently had to stop the process and re-zero the meters. The product mixture could not be measured accurately with the current equipment, consequently the finished product viscosity often was not achieved. The chemical company was looking for a flowmeter that would be resistant to vibration, but accurate enough to produce the required finished product quality.

SOLUTION

The chemical company initially installed a Micro Motion® Coriolis flowmeter on its first catalyst feed, and found that re-zeroing was not required, even a year after the meter had been installed. Unlike the original metering equipment, the Micro Motion meter has been completely immune to the surrounding plant vibrations and has experienced no down time. In addition, the finished product viscosity is far more consistent than ever before.

WWW.micromotion.com

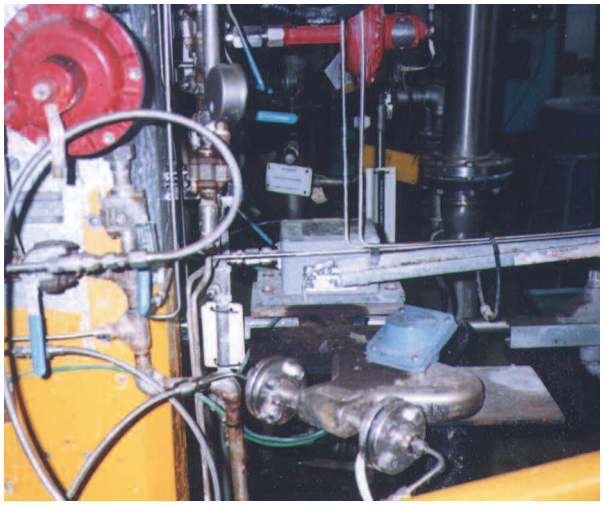

The Micro Motion meter has been completely immune to the surrounding plant vibrations and has experienced no down time.

Micro Motion®

For more information:
www.EmersonProcess.com/solutions/chemical
www.micromotion.com

EMERSON™
Process Management

AN-00313 / ©2005 Micro Motion, Inc. All rights reserved.

Based on its positive experience in the first catalyst feed line, the chemical company subsequently replaced meters in its second feed, intermediate product, and end-product lines with Micro Motion flowmeters.

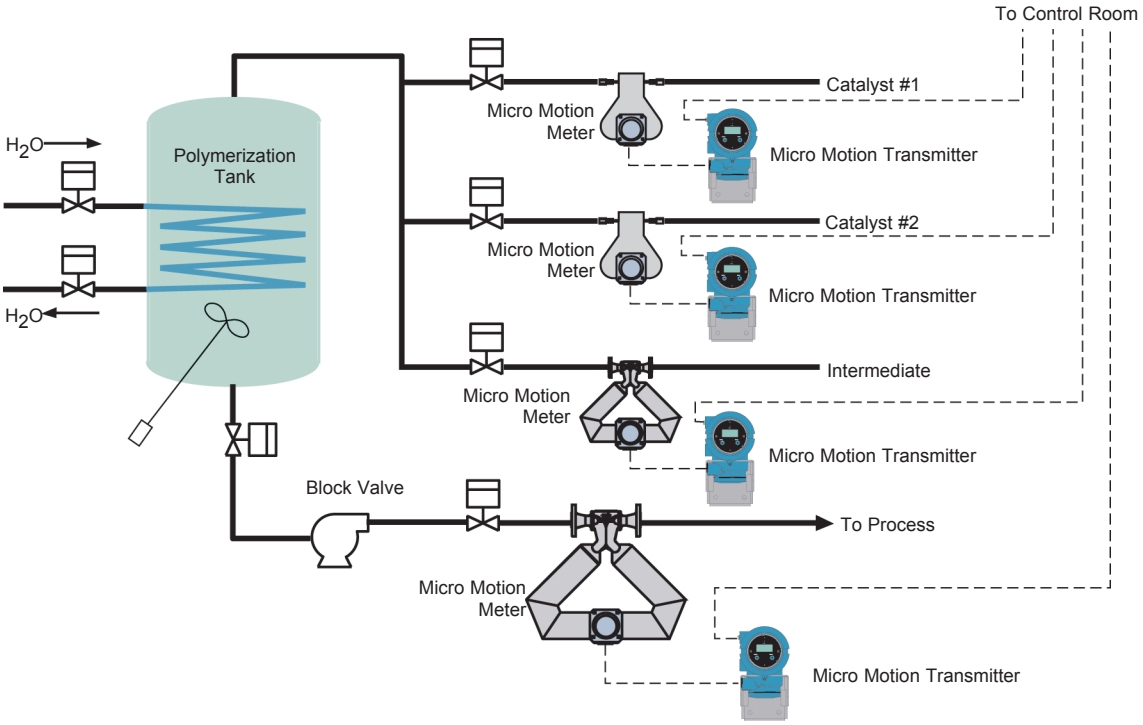

Micro Motion®

EMERSON™
Process Management