**Instruction Sheet**
PN 51A-1055CLpH/rev.K
August 2006

Model 1055 SOLU COMP® II

# Dual Input Chlorine/pH Analyzer

## Model Options 1055-24-32 and 1055-24

**For additional information, please refer to the Instruction Manuals CD shipped with this product, or visit our website at *www.emersonprocess.com/raihome/liquid/*.**

## ESSENTIAL INSTRUCTIONS

### READ THIS PAGE BEFORE PROCEEDING!

Your purchase from Rosemount Analytical, Inc. has resulted in one of the finest instruments available for your particular application. These instruments have been designed, and tested to meet many national and international standards. Experience indicates that its performance is directly related to the quality of the installation and knowledge of the user in operating and maintaining the instrument. To ensure their continued operation to the design specifications, personnel should read this manual thoroughly before proceeding with installation, commissioning, operation, and maintenance of this instrument. If this equipment is used in a manner not specified by the manufacturer, the protection provided by it against hazards may be impaired.

- Failure to follow the proper instructions may cause any one of the following situations to occur: Loss of life; personal injury; property damage; damage to this instrument; and warranty invalidation.
- Ensure that you have received the correct model and options from your purchase order. Verify that this manual covers your model and options. If not, call 1-800-854-8257 or 949-757-8500 to request correct manual.
- For clarification of instructions, contact your Rosemount representative.
- Follow all warnings, cautions, and instructions marked on and supplied with the product.
- Use only qualified personnel to install, operate, update, program and maintain the product.
- Educate your personnel in the proper installation, operation, and maintenance of the product.
- Install equipment as specified in the Installation section of this manual. Follow appropriate local and national codes. Only connect the product to electrical and pressure sources specified in this manual.
- Use only factory documented components for repair. Tampering or unauthorized substitution of parts and procedures can affect the performance and cause unsafe operation of your process.
- All equipment doors must be closed and protective covers must be in place unless qualified personnel are performing maintenance.
- If this equipment is used in a manner not specified by the manufacturer, the protection provided by it against hazards may be impaired.

## WARNINGS

### RISK OF ELECTRICAL SHOCK

⧈ Equipment protected throughout by double insulation.

- Installation of cable connections and servicing of this product require access to shock hazard voltage levels.
- Main power and relay contacts wired to separate power source must be disconnected before servicing.
- Do not operate or energize instrument with case open!
- Signal wiring connected in this box must be rated at least 240 V.
- Non-metallic cable strain reliefs do not provide grounding between conduit connections! Use grounding type bushings and jumper wires.
- Unused cable conduit entries must be securely sealed by non-flammable closures to provide enclosure integrity in compliance with personal safety and environmental protection requirements. Unused conduit openings must be sealed with NEMA 4X or IP65 conduit plugs to maintain the ingress protection rating (NEMA 4X).
- Electrical installation must be in accordance with the National Electrical Code (ANSI/NFPA-70) and/or any other applicable national or local codes.
- Operate only with front and rear panels fastened and in place over terminal area.
- Safety and performance require that this instrument be connected and properly grounded through a three-wire power source.
- Proper relay use and configuration is the responsibility of the user.

## CAUTION

This product generates, uses, and can radiate radio frequency energy and thus can cause radio communication interference. Improper installation, or operation, may increase such interference. As temporarily permitted by regulation, this unit has not been tested for compliance within the limits of Class A computing devices, pursuant to Subpart J of Part 15, of FCC Rules, which are designed to provide reasonable protection against such interference. Operation of this equipment in a residential area may cause interference, in which case the user at his own expense, will be required to take whatever measures may be required to correct the interference.

## WARNING

This product is not intended for use in the light industrial, residential or commercial environments per the instrument's certification to EN50081-2.

## SPECIFICATIONS - General

**Case:** ABS (panel mount), polycarbonate (surface/pipe mount). All versions are NEMA 4X/CSA 4 (IP65).

**Dimensions**

**Panel (code -10):** 6.10 x 6.10 x 3.72 in. (155 x 155 x 94.5 mm)

**Surface/Pipe (code -11):** 6.23 x 6.23 x 3.23 in. (158 x 158 x 82 mm); see page 5 for dimensions of pipe mounting bracket.

**Conduit openings:** Accepts PG13.5 or 1/2 in. conduit fittings

**Display:** Two line, 16-character, back-lit display. Character height: 4.8 mm. Display can be customized to meet individual requirements. Depending on number of sensors, as many as 14 display screens are available.

**Ambient temperature and humidity:** 0 to 50°C, (32 to 122°F) RH 5 to 95% (non-condensing)

Note: The analyzer is operable from -20 to 60°C (-4 to 140°F) with some degradation in display performance.

**Power:**

Code -01: 115/230 Vac ±15%, 50/60 Hz ±6%, 8.0W
Code -02*: 24 Vdc ±15%, 6.0W
Installation Category II

* *For +24Vdc Power Supply use only devices meeting NEC Class II or UL recognized (UL 1950).*

Equipment protected throughout by double insulation.

---

**Hazardous Location:**

–LR 34186 C US

Class I, Division 2, Groups A, B, C, & D

FM APPROVED

POLLUTION DEGREE 4: Extended Environment Outdoor use where conductive contamination such as rain, snow, or dust may be present. (Hazardous Location only)

---

**Ordinary Location: (-68 only)**

UL LISTED

**12RN**

POLLUTION DEGREE 2: Normally only non-conductive pollution occurs. Occasionally, however, a temporary conductivity caused by condensation must be expected.

**RFI/EMI:** EN-61326
**LVD:** EN-61010-1

**Input:** Choice of single or dual sensor input with measurement choices of pH/ORP, conductivity/resistivity, toroidal conductivity, flow, chlorine, dissolved oxygen, and dissolved ozone. Field-commissioned units allow user to change measurements on either or both inputs. See combination guide for valid combinations. For contacting conductivity measurements, temperature element must be a Pt 1000 RTD. For other measurements, use either a Pt100 RTD, Pt1000 RTD, or 22k NTC (D.O. only).

**Outputs:** Two 4-20 mA or 0-20 mA isolated outputs. Continuously adjustable. Linear or logarithmic. Maximum load 500 ohms. Output dampening with time constant of 5 sec is user-selectable.

**Alarms:** Three alarm relays for process measurement(s) or temperature. Alarm 3 can be configured as a fault alarm, instead of a process alarm. Each relay can be configured independently. Alarm logic (high or low activation or USP*) and deadband are user-programmable. The USP* alarm can be programmed to activate when the conductivity is within a user-selectable percentage of the limit.

**conductivity/resistivity measurement only*

**Relays:** Form C, single pole double throw, epoxy sealed

| | Resistive | Inductive |
|---|---|---|
| 28 Vdc | 5.0 A | 3.0 A |
| 115 Vac | 5.0 A | 3.0 A |
| 230 Vac | 5.0 A | 1.5 A |

**Terminal Connections Rating:** 26-14 AWG wire size

**Weight/Shipping weight** (rounded up to nearest lb or nearest 0.5 kg)**:** 3 lb (1.5 kg)/4 lb (2.0 kg)

# QUICK START GUIDE FOR MODEL SOLU COMP II
## CHLORINE/pH ANALYZER (Model Options 1055-24-32 and 1055-24)

1. Refer to page 9 for installation instructions.
2. Make alarm, output, and power connections as shown below.

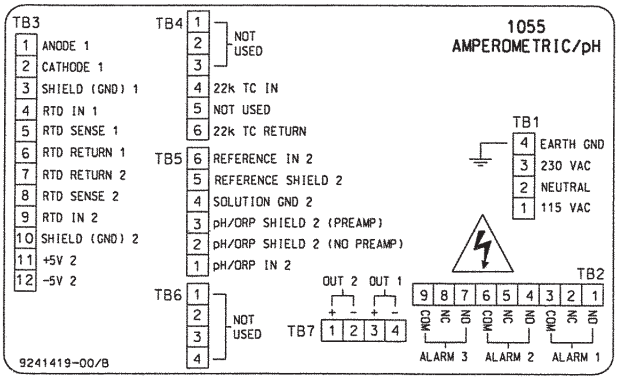


**Wiring Connections for Solu Comp II Model 1055-01-10 (Panel Mount with 115/230 Vac Power)**

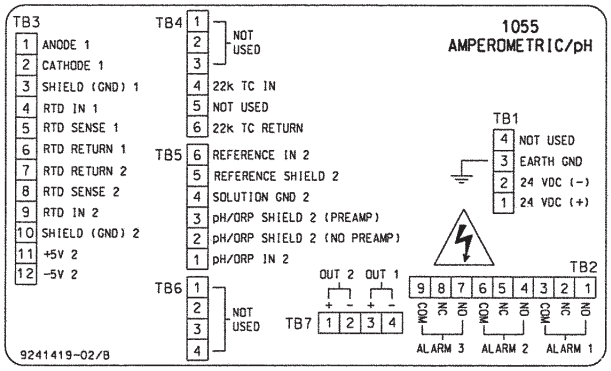


**Wiring Connections for Solu Comp II Model 1055-02-10 (Panel Mount with 24 Vdc Power)**

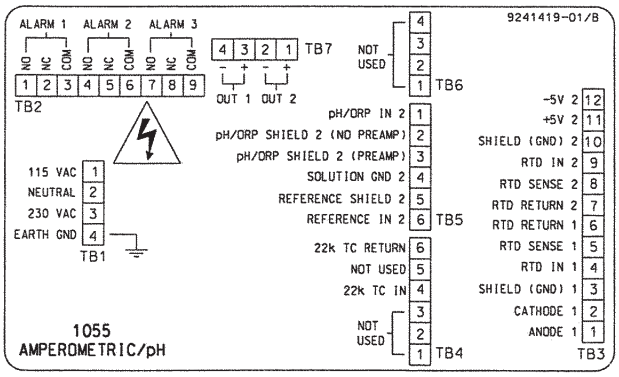


**Wiring Connections for Solu Comp II Model 1055-01-11 (Surface/Pipe Mounting with 115/230 Vac Power)**

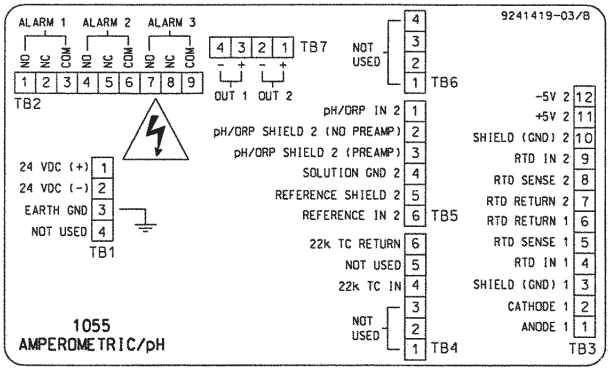


**Wiring Connections for Solu Comp II Model 1055-02-11 (Surface/Pipe Mounting with 24 Vdc Power)**

3. Wire sensor(s) to the analyzer. See the drawings below.

**499ACL-01, -02, and -03 sensors only.**

The free chlorine (499ACL-01), total chlorine (499ACL-02), and monochloramine (499ACL-03) sensors have identical wiring.

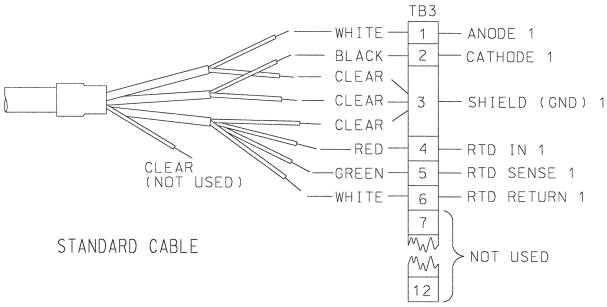


**499ACL chlorine sensor with standard cable.**

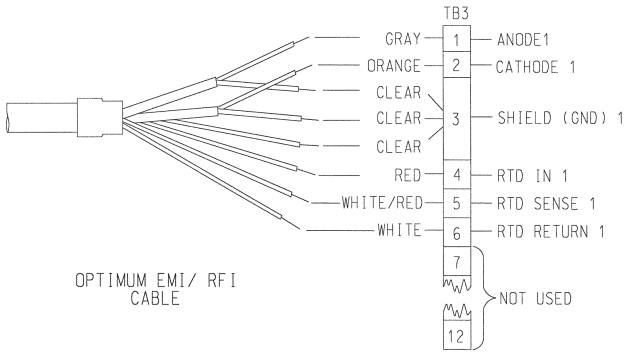


**499ACL chlorine sensor with optimum EMI/RFI or Variopol cable.**

**499ACL-01 (free chlorine sensor) with pH sensor for automatic pH correction.**

**NOTE**

**When wiring a pH and free chlorine sensor to the analyzer, connect the anode and pH reference terminals (TB3-1 and TB5-6) with the jumper provided with the analyzer. Depending on the date the instrument was shipped, the jumper may be either a 50 kΩ resistor or a 10 MΩ resistor in parallel with a 0.1 μf capacitor. Either jumper is satisfactory.**

Insulate and tape back unused wires.

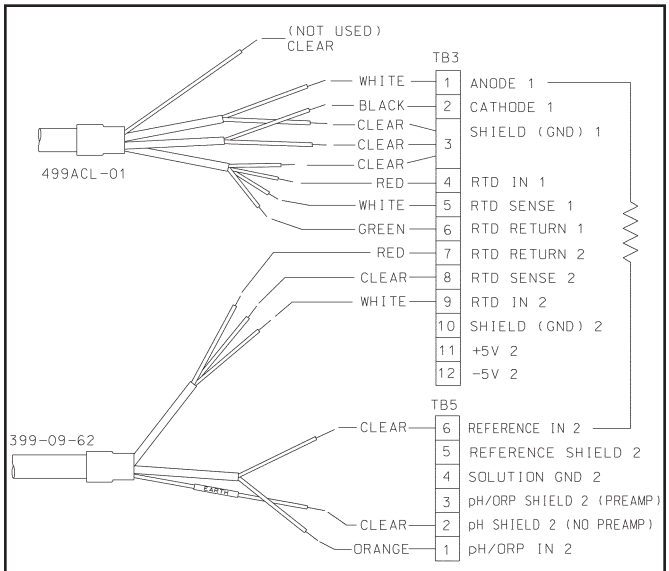


**Wiring diagram: 1055 panel mount; 499ACL with standard cable; 399-09-62**

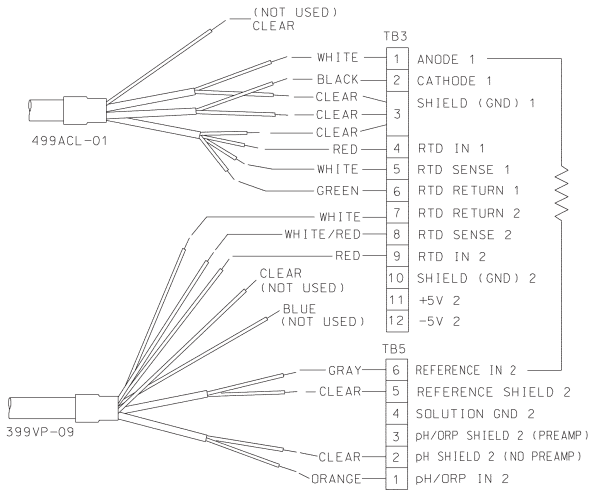


**Wiring diagram: 1055 panel mount; 499ACL with standard cable; 399VP-09**

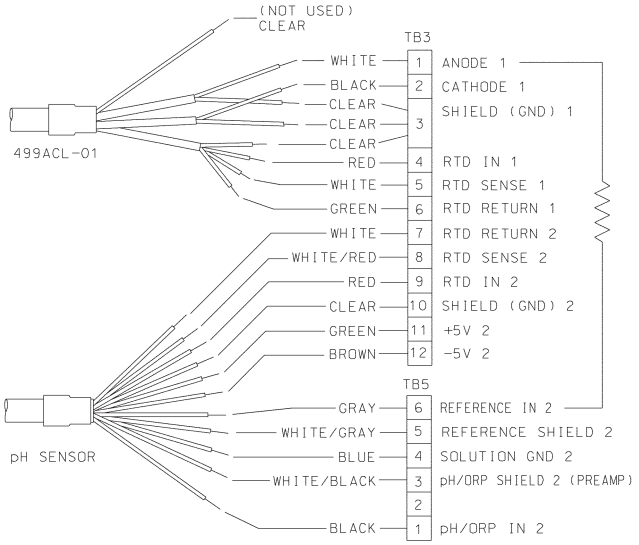


Although the blue wire is connected to a terminal labeled *solution ground*, the blue wire does not connect to a solution ground in the sensor. The 399-14 sensor has no solution ground. The blue wire, instead, ties the preamplifier in the sensor to instrument common

**Wiring diagram: 1055 panel mount; 499ACL with standard cable; 399-14**

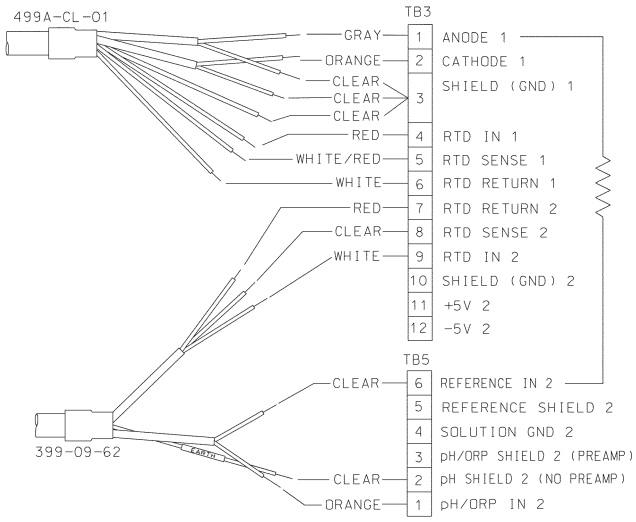


**Wiring diagram: 1055 panel mount; 499ACL with EMI/RFI or Variopol cable; 399-09-62**

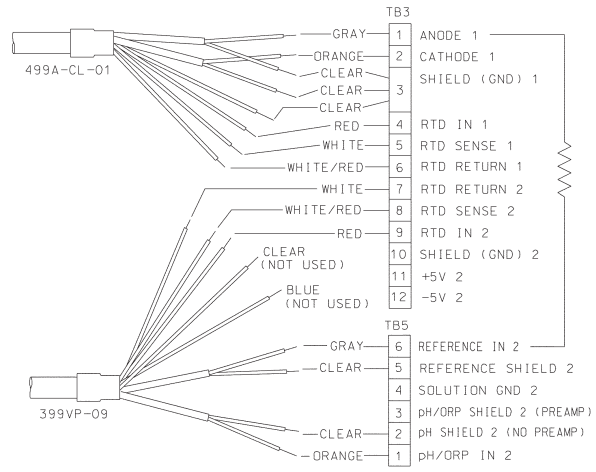


**Wiring diagram: 1055 panel mount; 499ACL with EMI/RFI or Variopol cable; 399VP-09**

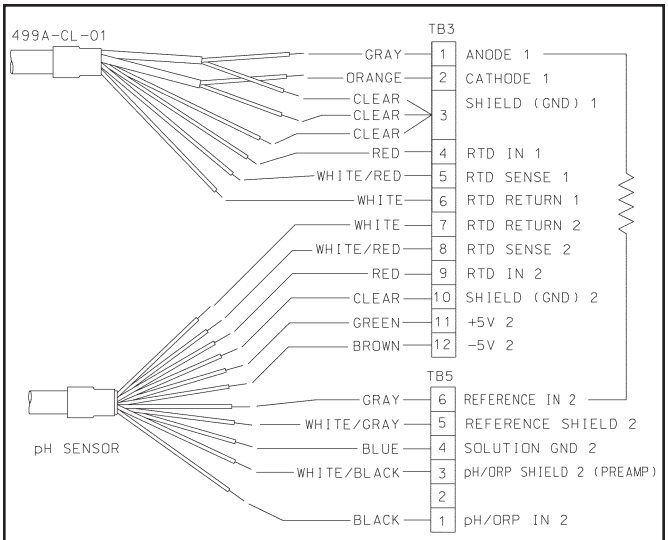


Although the blue wire is connected to a terminal labeled *solution ground*, the blue wire does not connect to a solution ground in the sensor. The 399-14 sensor has no solution ground. The blue wire, instead, ties the preamplifier in the sensor to instrument common

**Wiring diagram: 1055 pipe/wall mount; 499ACL with EMI/RFI or Variopol cable; 399-14**

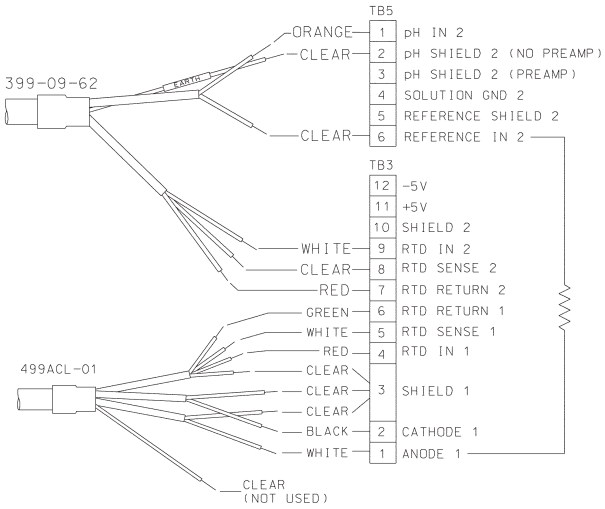


**Wiring diagram: 1055 pipe/wall mount; 499ACL with standard cable; 399-09-62**

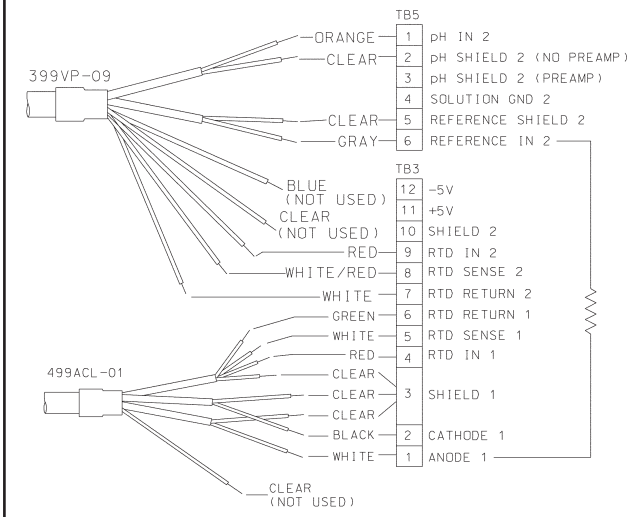


**Wiring diagram: 1055 pipe/wall mount; 499ACL with standard cable; 399VP-09**

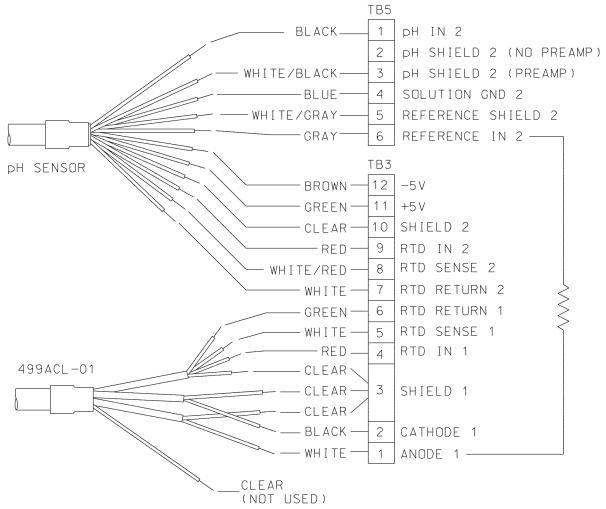


Although the blue wire is connected to a terminal labeled *solution ground*, the blue wire does not connect to a solution ground in the sensor. The 399-14 sensor has no solution ground. The blue wire, instead, ties the preamplifier in the sensor to instrument common

**Wiring diagram: 1055 pipe/wall mount; 499ACL with standard cable; 399-14**

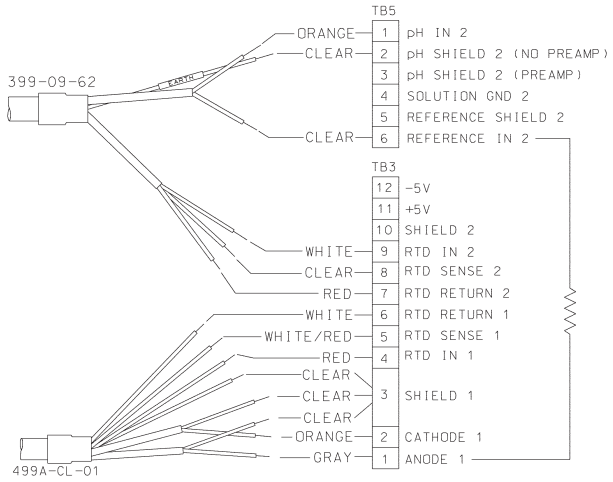


**Wiring diagram: 1055 pipe/wall mount; 499ACL with EMI/RFI or Variopol cable; 399-09-62**

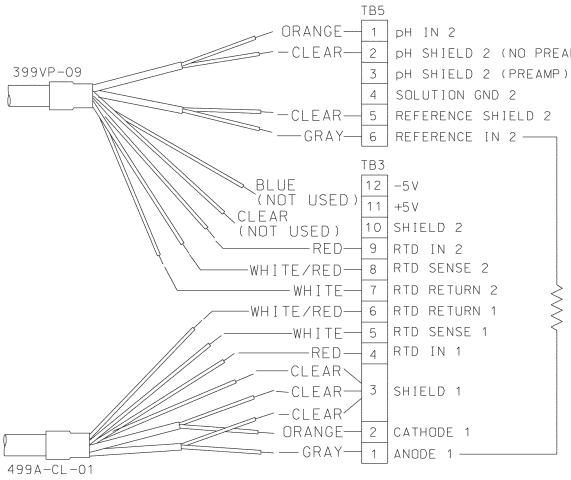


**Wiring diagram: 1055 pipe/wall mount; 499ACL with EMI/RFI or Variopol cable; 399VP-09**

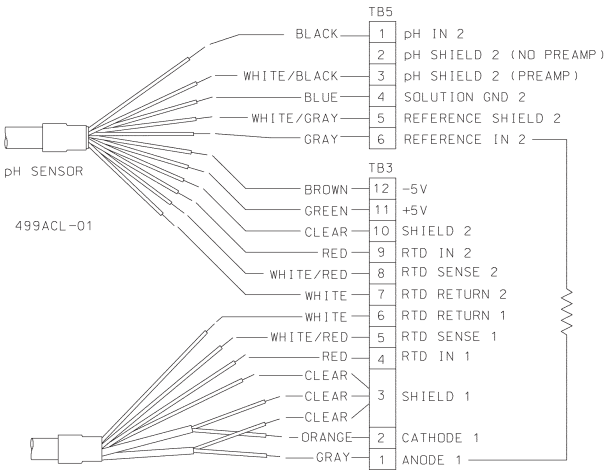


Although the blue wire is connected to a terminal labeled *solution ground*, the blue wire does not connect to a solution ground in the sensor. The 399-14 sensor has no solution ground. The blue wire, instead, ties the preamplifier in the sensor to instrument common

**Wiring diagram: 1055 pipe/wall mount; 499ACL with EMI/RFI or Variopol cable; 399-14**

### 498CL-01 (pH-independent free chlorine sensor)

Integral cable and VP sensors have identical wiring.

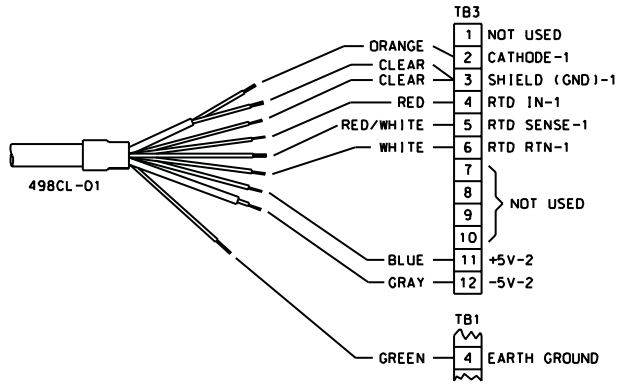


**Wiring daigram: 1055 panel mount; 498CL-01**

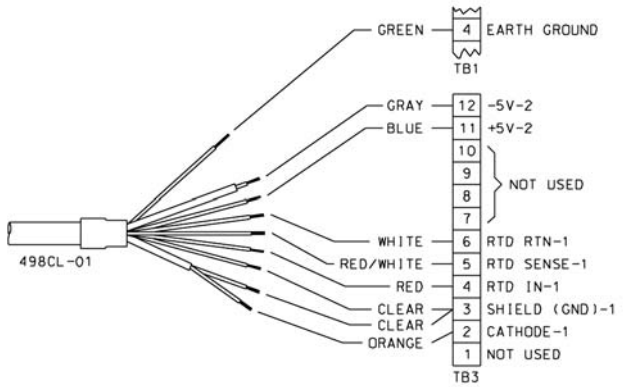


**Wiring diagram: 1055 pipe/wall mount; 498CL-01**

### 498CL-01 sensor used with pH sensor

The 498CL-01 (pH-independent free chlorine sensor) does not require a pH sensor for pH correction. However, the sensor can be used with a pH sensor. Wiring diagrams are shown below.

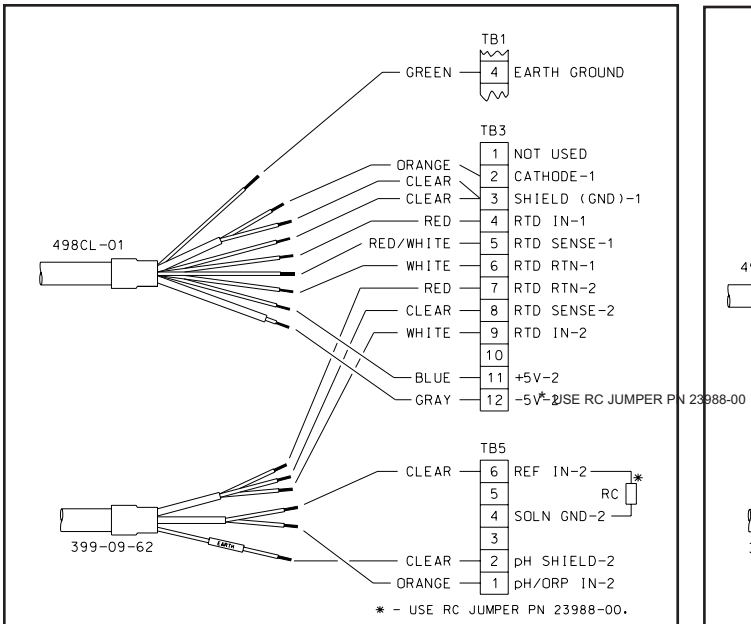


**Wiring diagram: 1055 panel mount; 498CL-01; 399-09-62**

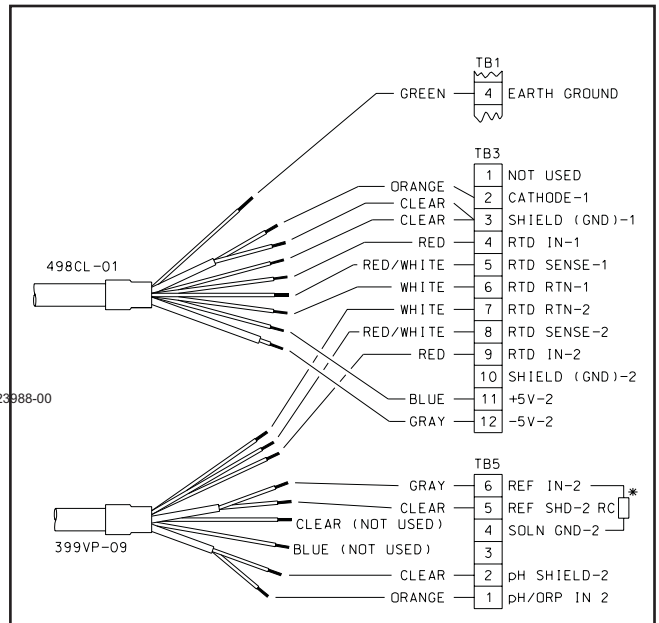


**Wiring diagram: 1055 panel mount; 498CL-01; 399VP-09**

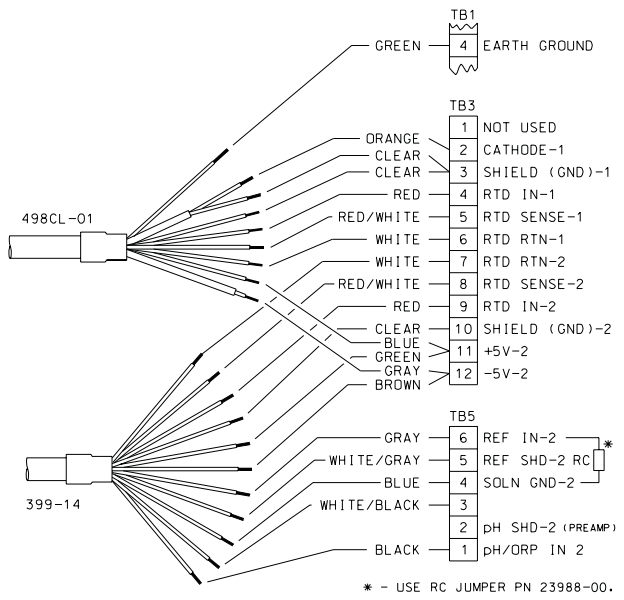


**Wiring diagram: 1055 panel mount; 498CL-01; 399-14**

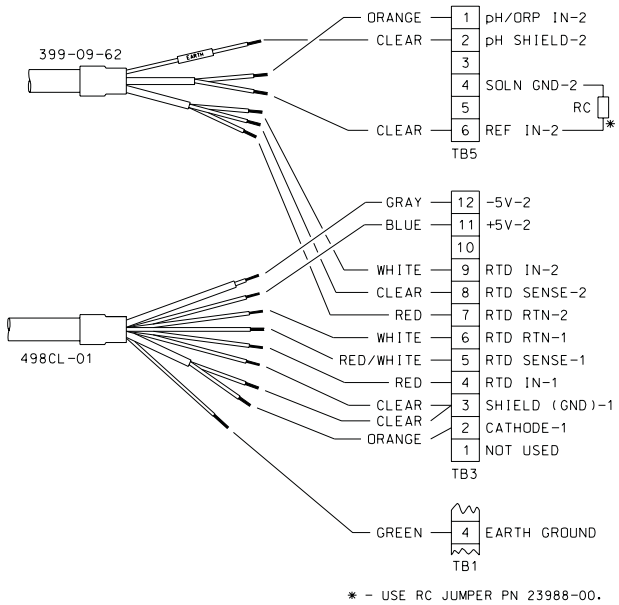


**Wiring diagram: 1055 pipe/wall mount; 498CL-01; 399-09-62**

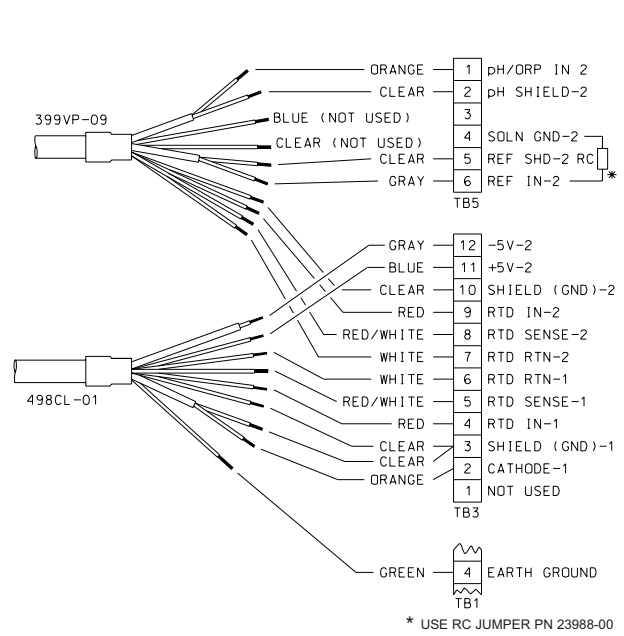


**Wiring diagram: 1055 pipe/wall mount; 498CL-01; 399VP-09**

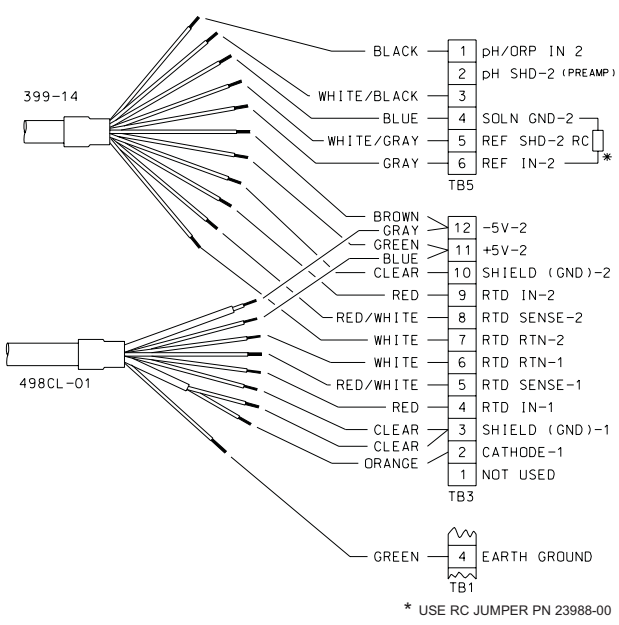


**Wiring diagram: 1055 pipe/wall mount; 498CL-01; 399-14**

4. Once connections are secured and verified, apply power to the analyzer.
5. When the analyzer is powered up for the first time, **Quick Start** screens appear. Using **Quick Start** is easy.
   a. A blinking field shows the position of the cursor.
   b. Use the ◀ or ▶ key to move the cursor left or right. Use the ▲ or ▼ key to move the cursor up or down or to increase or decrease the value of a digit. Use the ▲ or ▼ key to move the decimal point.
   c. Press ENTER to store a setting. Press EXIT to leave without storing changes. Pressing EXIT also returns the display to the previous screen.

```
English          Français
Español               >>
```

6. Choose the desired language. Choose **>>** to show more choices.

```
# of sensors?
One                  Two
```

7. Choose the number of sensors wired to the analyzer.

**NOTE**

If one sensor is selected, only **S1** (chlorine) will be available. **S2** (pH/ORP) cannot be chosen for single measurement.

```
S1 Chlorine Type
free      total       >>
```

8. Choose the measurement for sensor 1 (chlorine).

```
S2 Measure?          pH
Redox               ORP
```

9. Choose the measurement for sensor 2 (pH). If the analyzer was configured to measure chlorine only, this screen does not appear.

```
Temperature in?
°C                   °F
```

10. Choose temperature units.
11. The main display appears. The outputs and alarms are assigned to default values.
12. If free chlorine is to be measured using the 499ACL-01 sensor, the analyzer must be configured for automatic or manual pH correction. Go to the main menu and choose **Program** followed by **Measurement**. Choose **Sensor 1** then **Free Chlorine**. Choose **Auto** or **Manual** pH correction. For manual pH correction, enter the pH of the process liquid.

    If the chlorine is to be measured using the 498CL-01 (pH-independent free chlorine sensor), go to the main menu and choose **Program** followed by **Measurement**. Choose **Sensor 1** then **Free Chlorine**. Choose **Manual** pH correction and enter 7.00.

    If total chlorine (499ACL-02 sensor) or monochloramine (499ACL-03 sensor) is to be measured, pH correction is NOT required.
13. To change outputs, alarms, and temperature-related settings, go to the main menu and choose **Program**. Follow the prompts. For a guide to the Program menu, see the menu tree on the following page.
14. To return the analyzer to the default settings, choose **Reset Analyzer** in the Program menu.

# QUICK REFERENCE GUIDE

## MENU TREE FOR CHLORINE/pH MEASUREMENTS

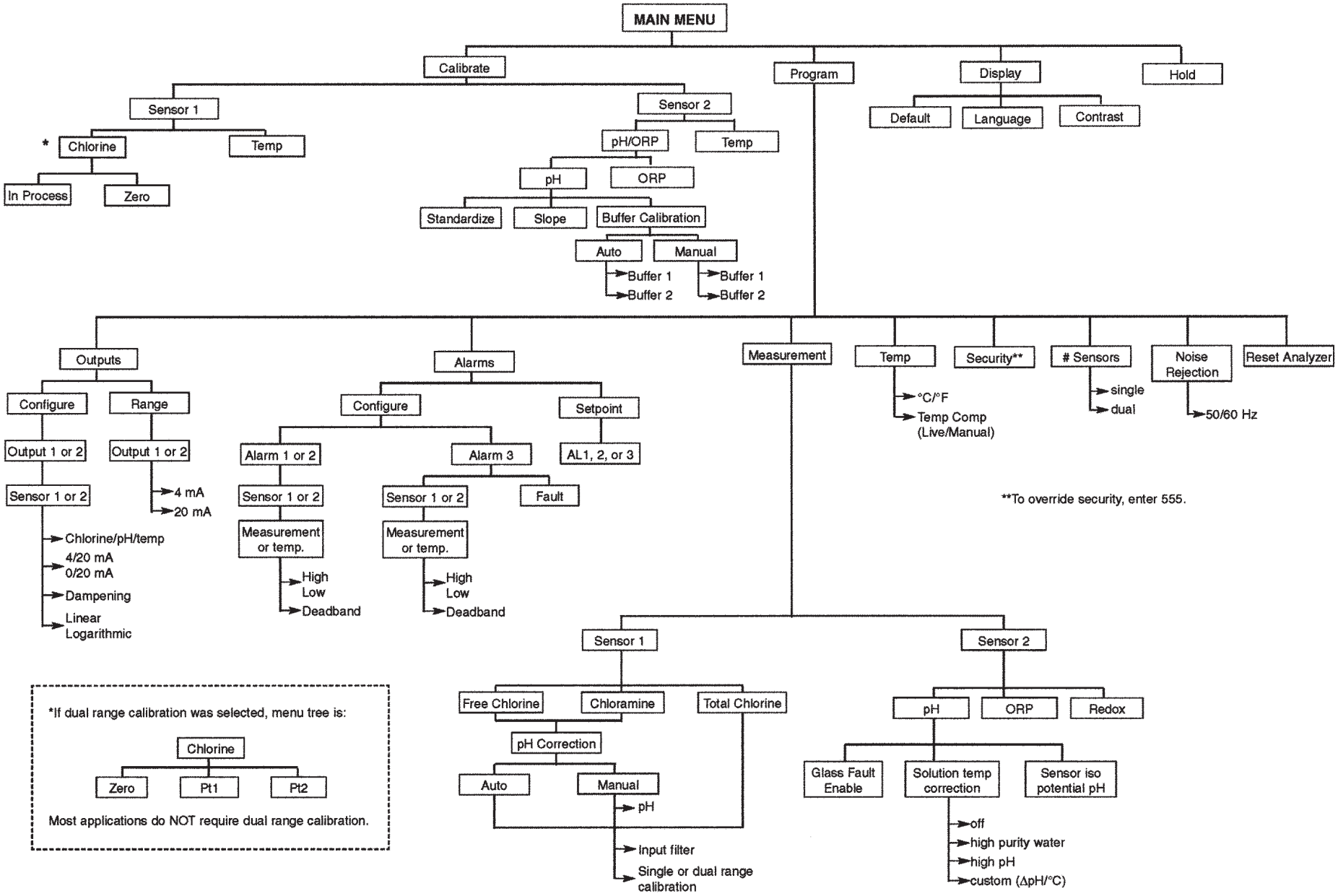

# INSTALLATION

## UNPACKING AND INSPECTION.

Inspect the shipping container. If it is damaged, contact the shipper immediately for instructions. Save the box. If there is no apparent damage, unpack the container. Be sure all items shown on the packing list are present. If items are missing, notify Rosemount Analytical immediately.

## INSTALLATION

1. Although the analyzer is suitable for outdoor use, do not install it in direct sunlight or in areas of extreme temperatures.
2. Install the analyzer in an area where vibrations and electromagnetic and radio frequency interference are minimized or absent.
3. Keep the analyzer and sensor wiring at least one foot from high voltage conductors. Be sure there is easy access to the analyzer.
4. **AC power and relay wiring should not enter via top conduit openings and should be kept separated from other wiring in the analyzer after installation.**
5. To reduce the likelihood of stress on wiring connections, the hinged front panel (-11 models) shall not be removed from the base during wiring installation, and there shall be sufficient wire leads to avoid stress on conductors.
6. For UL-approved models (-68), the clear wiring shield must be installed prior to operation.

## PANEL MOUNTING

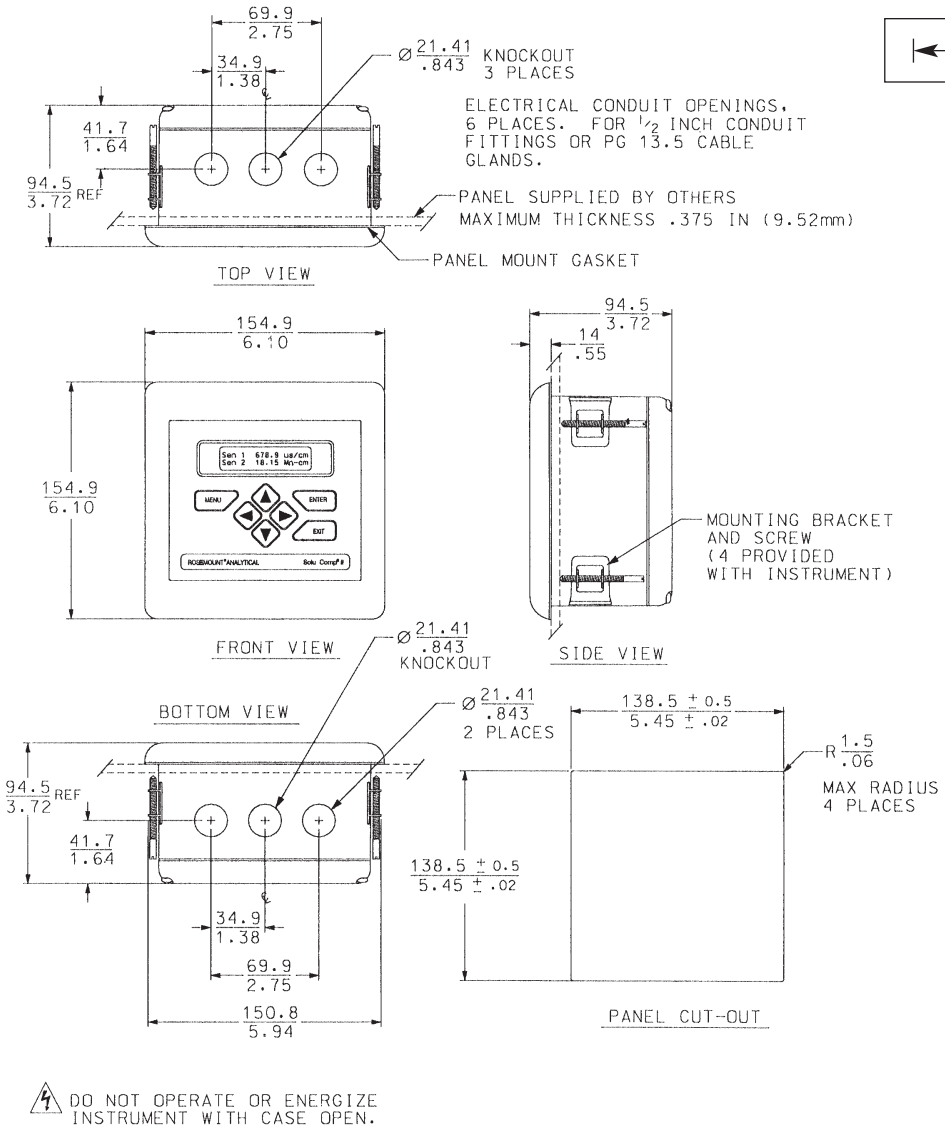


**FIGURE 2-1. Panel Mount Installation**

*Access to the wiring terminals is through the rear cover. Four screws hold the cover in place.*

## PIPE MOUNTING

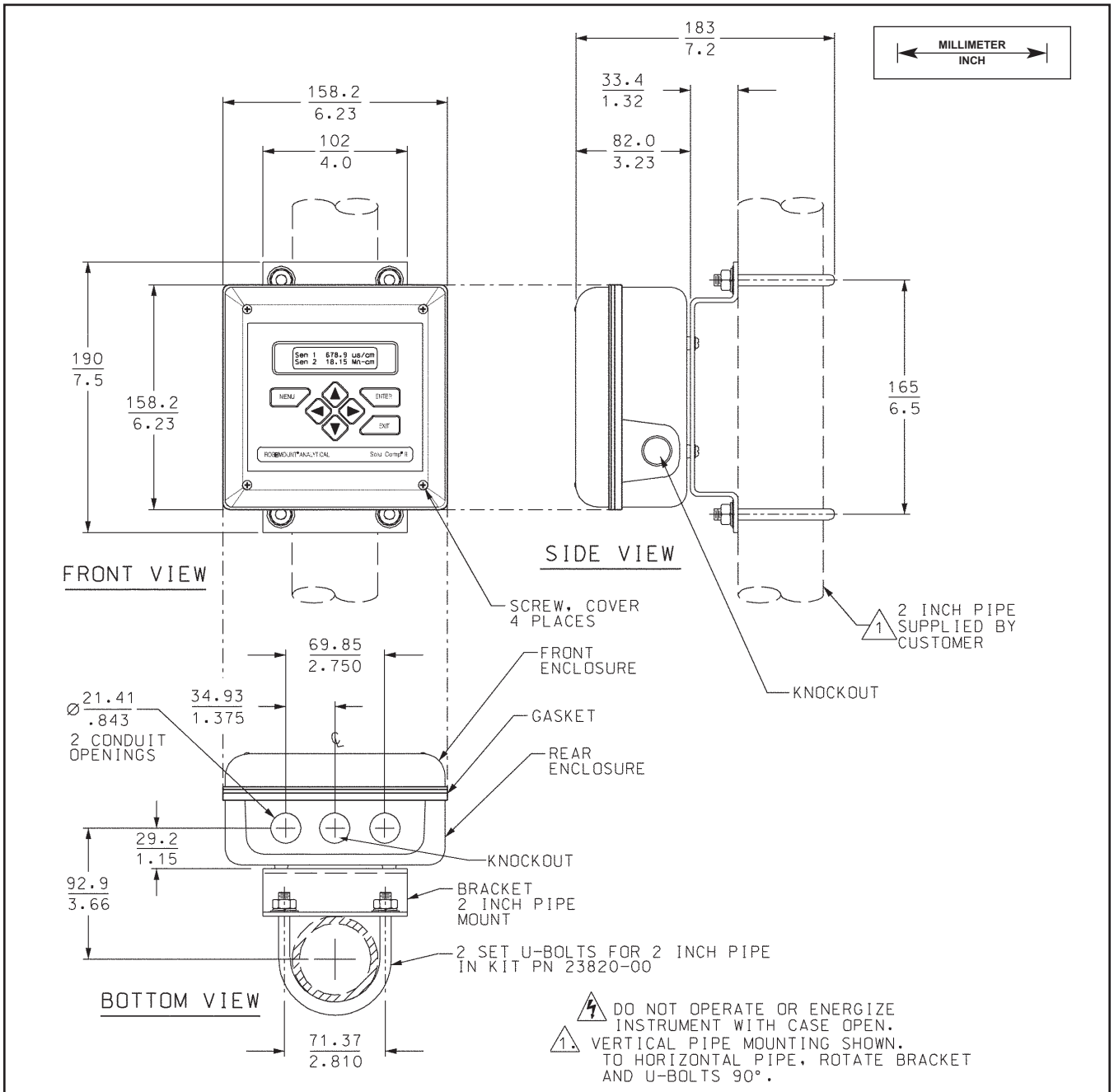


**FIGURE 2-2. Pipe Mount Installation**

*The front panel is hinged at the bottom. The panel swings down for access to the wiring terminals.*

## SURFACE MOUNTING

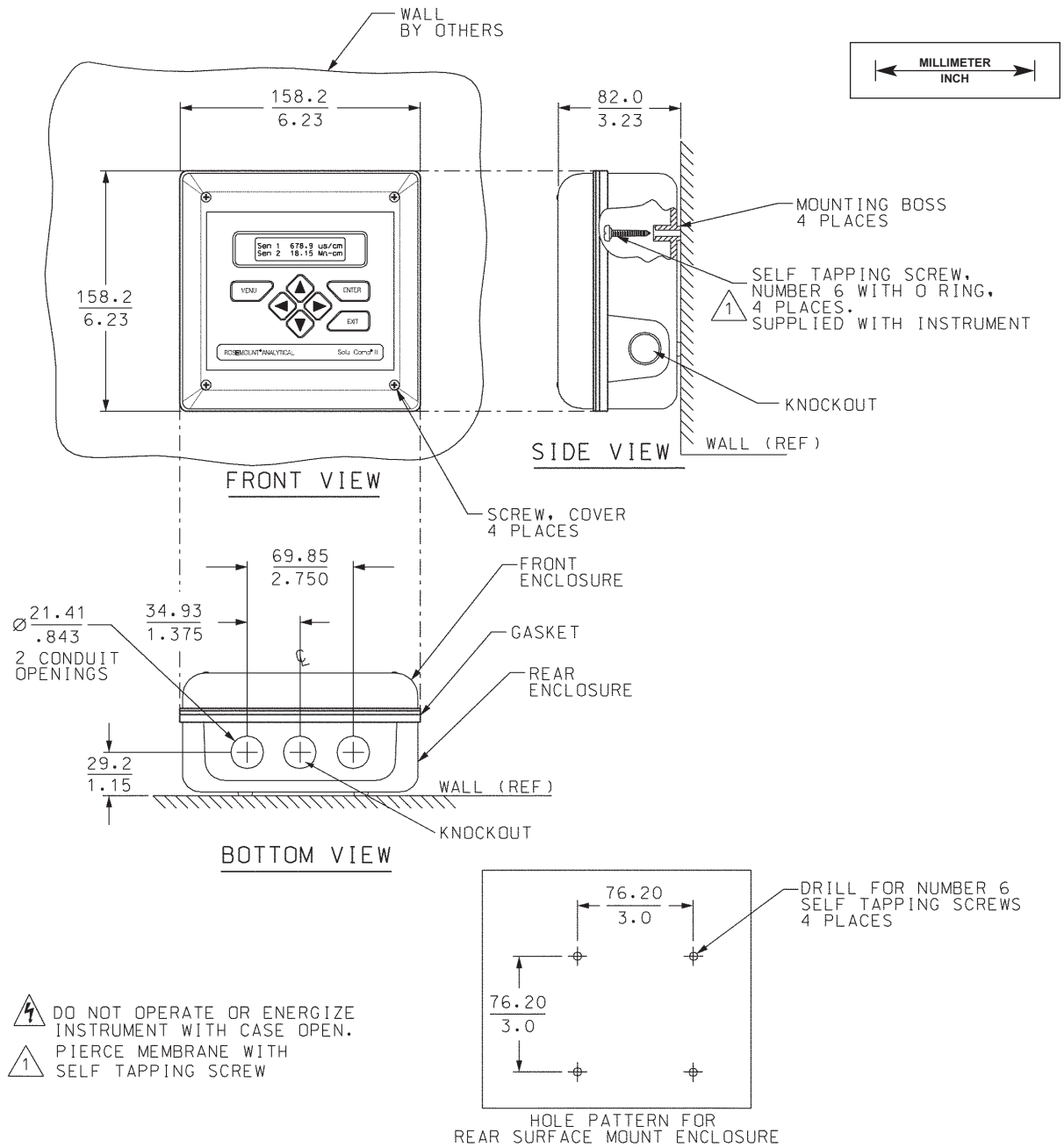


**FIGURE 2-3. Surface Mount Installation**

*The front panel is hinged at the bottom. The panel swings down for access to the wiring terminals.*

# NOTES:

# CALIBRATION

| | |
|---|---|
| Free chlorine (499ACL-01) | Deionized water containing at least 500 ppm sodium chloride |
| Free chlorine (498CL-01) | Deionized water |
| Total chlorine or monochloramine | Deionized water |

### Calibration-Zero

1. Place the sensor in the zero solution.

   With the exception of the 498CL-01 (pH-independent free chlorine sensor) keep the sensor in the zero solution for AT LEAST TWO HOURS before zeroing.

   For the 498CL-01 sensor, place the sensor in FLOWING CHLORINATED water for two hours before zeroing, then transfer the sensor to deionized water. DO NOT EXPOSE THE SENSOR TO NON-FLOWING DEIONIZED WATER FOR LONGER THAN 30 MINUTES.
2. From the main display, press MENU.
3. Choose **Calibrate**.
4. Choose **Sensor1**.
5. Choose **Measurement**.
6. Choose **Zero**.
7. Once the sensor current is stable, the analyzer will accept the zero value.
8. Press MENU then EXIT.

### Calibration-Full scale

1. Free chlorine (499ACL-01): Place the sensor in the flow cell. If automatic pH correction is being used, calibrate the pH sensor and place it in the process liquid. Adjust the sample flow to the value recommended in the sensor manual. Adjust the concentration of chlorine to near the upper end of the operating range.
2. Free chlorine (498CL-01): Place the sensor in the flow cell. Adjust the sample flow to the value recommended in the sensor manual. Adjust the concentration of chlorine to near the upper end of the operating range.
3. Total chlorine: Keep the sensor in the low flow cell in the TCL, and start the flow of reagent. Adjust the concentration of chlorine to near the upper end of the operating range.
4. Monochloramine: Place the sensor in the flow cell. Adjust the sample flow to the value recommended in the sensor manual. Adjust the concentration of chlorine to near the upper end of the operating range.
5. From the main display, press MENU.
6. Choose **Calibrate**.
7. Choose **Sensor1**.
8. Choose **Measurement**.
9. Choose **InProcess**.
10. Take a sample of the process liquid and immediately determine the chlorine concentration. Use the arrow keys to change the concentration reading in the second line of the display to match the test results. Press ENTER.
11. Press MENU then EXIT.

### Calibration-pH

1. The analyzer does an automatic two-point calibration.
2. Obtain two buffer solutions. Ideally, the buffer pH should bracket the expected pH of the sample.
3. From the main display, press MENU.
4. Choose **Calibrate**.
5. Choose **Sensor2**.
6. Choose **Measurement**.
7. Choose **BufferCal**.
8. Choose **Auto**.
9. Choose **Buffer1**.
10. Place the sensor in the first buffer. Once **Wait** disappears, the analyzer displays the buffer pH. If the displayed value is not correct use ▲ to scroll through the list of standard buffer values. Press ENTER.
11. Place the sensor in the second buffer. Choose **Buffer2**. Once **Wait** disappears, the analyzer displays the buffer pH. If the displayed value is not correct use ▲ to scroll through the list of standard buffer values. Press ENTER.
12. If the calibration was successful, the analyzer will display the slope and offset.
13. Press MENU then EXIT.

*The right people,*
*the right answers,*
*right now.*

ROSEMOUNT ANALYTICAL
CUSTOMER SUPPORT CENTER
**1-800-854-8257**

*ON-LINE ORDERING NOW AVAILABLE ON OUR WEB SITE*
http://www.raihome.com

*Specifications subject to change without notice.*

Credit Cards for U.S. Purchases Only.


**Emerson Process Management**

**Liquid Division**
2400 Barranca Parkway
Irvine, CA 92606 USA
Tel: (949) 757-8500
Fax: (949) 474-7250

http://www.raihome.com



© Rosemount Analytical Inc. 2006


EMERSON
Process Management