Product Data Sheet
March 2017
211-50-070, Rev M

Paine 211-50-070 Series Pressure Transducer

mV/V, Downhole, HP/HT, +260 °C, Ranges to 30,000 PSIA (2068 BAR)

The 211-50-070 Series is our rugged High Pressure/High Temperature (HP/HT) combination transducer designed for +500 °F (+260 °C) offshore oil, gas and power industry requirements. The 211-50-070 Series, based on its small size, all welded construction and ability to perform in corrosive high shock and vibration environments, is the best solution for new tool and process equipment design when temperatures are going to reach +500 °F (+260 °C).

EMERSON

Solutions

- High pressure and high temperature measurement.
- Each sensor is provided with coefficients to load into your electronics for temperature and non-linearity compensation.
- All-welded, sealed construction.
- Harsh/extreme environment ready.

Potential applications

- Oil and gas exploration and production.
- MWD, PWD and LWD tools.
- Wellhead and pump station monitoring.
- Geothermal and power generation.
- OEM and end-user applications.

Features

- **Full Scale (F.S.) Sensitivity:** 2.8 mV/V nominal.
- **Total Error Band (Non-Linearity, Hysteresis & Thermal Effects):** ± 0.150% Full Scale (F.S.).
- **Output:** mV/V.
- **Operating Temperature:** +75 °F to +500 °F (+23 °C to +260 °C).
- **Pressure Range:** 0-5,000 to 0-30,000 PSIA (344 to 2068 BAR).
- **Operating Media:** Compatible with alloy UNS NO7718 solution annealed and aged to a minimum hardness of 40HRC.
- **Pressure Fitting:** Per MS33656-E3.

Specifications

Calibration: Calibration Certificates are supplied with each unit and available on-line.

Performance

Full Scale (F.S.) Sensitivity: 2.8 mV/V nominal.

Total Error Band (Non-Linearity, Hysteresis & Thermal Effects): ± 0.150% Full Scale (F.S.).

Non-Linearity and Hysteresis Combined: ±0.150% of F.S. maximum (BSLM).

Output at Zero Pressure: 0 ± 2.8 mV/V nominal.

Platinum Resistance Temperature Detector (RTD): 0 °C, 1000 Ω ± 0.06% Ω to IEC 751, Class A, Alpha = 0.00385 nominal.

Un-Compensated: This sensor is not hardware compensated for temperature effects on signal. Each sensor is provided with coefficients to load into your electronics for temperature and nonlinearity compensation.

Environmental

Environmental: Error due to combined effect of shock, vibration and acceleration shall be less than 0.01% of F.S.O. per G.

Operating Temperature Range: +75 °F to +500 °F (23 °C to +260 °C).

Compensated Temperature Range: +75 °F to +500 °F (23 °C to +260 °C).

Contents

Specifications 2
Dimensional Drawings 4

Mechanical

Pressure Range: Contact factory for additional pressure ranges.

Pressure table				
Standard part number	**Pressure range PSIA (BAR)**	**Proof pressure PSIA (BAR)**	**Burst pressure PSIA (BAR)**	**Replaceable seal part number**
211-50-070-01	0-5,000 (0-344)	7,500 (517)	10,000 (689)	247-99-250-01
211-50-070-02	0-10,000 (0-689)	15,000 (1,034)	20,000 (1,378)	247-99-250-01
211-50-070-03	0-15,000 (0-1,034)	18,750 (1,292)	22,500 (1,551)	247-99-250-01
211-50-070-04	0-20,000 (0-1,378)	25,000 (1,723)	30,000 (2,068)	247-99-250-01
211-50-070-05	0-22,500 (0-1,551)	28,125 (1,923)	30,000 (2,068)	247-99-250-01
211-50-070-06	0-25,000 (0-1,723)	31,250 (2,154)	33,000 (2,757)	247-99-250-02
211-50-070-07	0-30,000 (0-2,068)	37,500 (2,585)	40,000 (2,757)	247-99-250-02

External Case Pressure: Up to 20,000 psi (1378 bar).

Pressure Media: Any compatible with alloy UNS NO7718 solution annealed and aged to a minimum hardness of 40 HRC.

Pressure Fitting: Per MS33656-E3.

Installation Information: Mount on port using annealed alloy 600 Replaceable Seal. Thermal coefficient of the mounting expansion should not exceed 8.3 x 10^ -6 in/in °F for operation above 100 °C.

Recommended Installation Torque: 125 to 150 in-lb (14-17 Nm).

Electrical

Excitation: 1 to 20 VDC (10 VDC nominal).

Input Resistance: 1500 ± 300 Ω.

Output Resistance: 1500 ± 150 Ω.

Insulation Resistance: All conductors together to case, 10 G Ω minimum at 50 VDC and +77 °F (+25 °C).

Electrical Connections: High temperature solderable pins.

Dimensional Drawings

Figure 1. Paine 211-50-070 Series

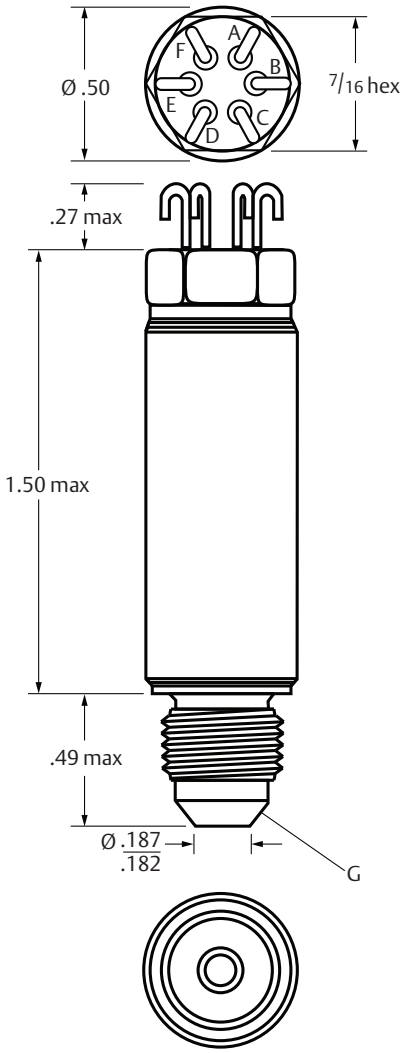

Connections	
PIN	**Function**
A	+ Excitation
B	+ Signal
C	- Signal
D	- Excitation
E	R.T.D.
F	R.T.D.

A–F. See Connections table
G. Fitting end per MS33656-E3

Dimensions are inches.

This page is intentionally left blank.

Rosemount Specialty Product LLC
Emerson Automation Solutions
5545 Nelpar Drive
East Wenatchee, WA 98822, USA
+1 509 881 2100
+1 509 881 2115
Paine.Products@Emerson.com

Linkedin.com/company/Emerson-Automation-Solutions

Standard Terms and Conditions of Sale can be found on the Terms and Conditions of Sale page.
The Emerson logo is a trademark and service mark of Emerson Electric Co.
The Paine brand and Paine logotype are trademarks of Emerson Electric Co.
All other marks are the property of their respective owners.
© 2017 Emerson. All rights reserved.