TopWorx™ How To Sell Guide

TV Series

TOPWORX™

EMERSON™
Process Management

CONTENTS

Introduction 2
TV Line 2
Product Highlights. 3
Switch Options 4
Pilots (Solenoids) 4
Product Markings 4
North American Marking 4
ATEX/IECEx 4
Protection Method Explained. 5
Europe- CENELEC, IEC 5
TVF Label 5
Zones Explained 5
ATEX and IECEx Markings Explained 6
Gas Markings 6
Dust Markings. 6
North American/NEC Markings 6

Introduction

The TopWorx™ TVF, TVL, and TVH are a set of cost effective switch-boxes that offer the market a full line of products from very robust explosion proof/flameproof to a lighter more compact product solution like the TV line. There is a TopWorx™ switchbox for every need and application.

TVF, TVL, and TVH are specially engineered for intrinsically safe and non-incendive applications where there is no need for a heavy, thick-walled, switchbox to meet the area classification. The TV line is also suitable for general purpose process environments where there is no need for hazardous approvals, but there is a need for a light, compact, and robust switchbox that can take a beating under the harshest of environments.

TV Line

This TV line of valve controllers are based off the existing TVA, and as such will have the same footprint as the TVA.

TVF
Aluminum Base with
a clear Lexan lid

TVH
316 Stainless Steel lid with
a 316 Stainless Steel base

TVL
Aluminum Base with
an Aluminum Lid

Product Highlights

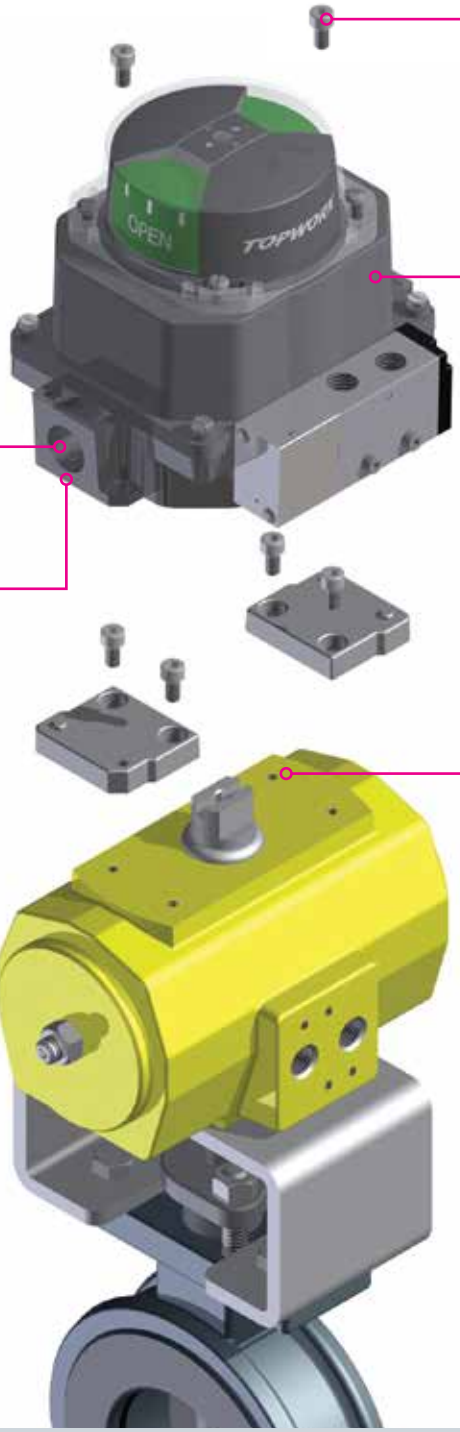

Only two screws needed for attachment to mounting kit

Lightweight metal enclosure suitable for IS and non-incendive applications and robust enough to take a beating under the harshest of environment like wastewater and power applications.

IP68 tested.

(2) Conduit Entries: ½", ¾", M20, M25

All metal base with conduit entries that will accommodate threaded rigid metal conduit without the worry of splitting the conduit entry.

Direct mount

Dual integral solenoids for double acting actuators – fail last position.

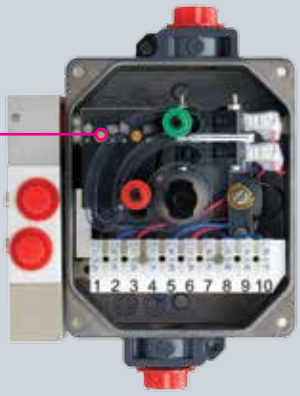

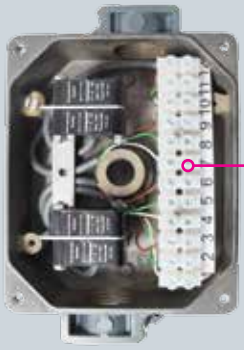

12 point terminal strip when only switches are used.

* **NOTE**
(4) switch option only available without pilot.

Switch Options

The product is available with simple switches, mechanical, reed switches, and NAMUR switches. Approval types will dictate the temperature range and the type of switches available. Below is a table that shows the product approvals and ambient temperature based on the enclosure type and switch options.

Class I & II Division 1 Intrinsically Safe / Zone 1, 21									
					No Valve			With Valve	
Switch	**Type**	**Output**	**Rating**	**Model**	**TVH/TVL**	**TVF**		**TVH/TVL**	**TVF**
M	Mech	SPDT	10A, 250Vac		-50°C to 60°C	-20°C to 40°C		-10°C to 40°C	-10°C to 40°C
K*	Mech	SPDT	10A,250Vac	(switch contacts are gold flashed)	-50°C to 60°C	-20°C to 40°C		-10°C to 40°C	-10°C to 40°C
T	Mech	DPDT	8A, 250Vac		-50°C to 60°C	-20°C to 40°C		-10°C to 40°C	-10°C to 40°C
R	Reed	SPDT	1A/24Vdc, 200mA/120Vac		-50°C to 60°C	-20°C to 40°C		-10°C to 40°C	-10°C to 40°C
P	Reed	SPDT	3A, 120V		-50°C to 60°C	-20°C to 40°C		-10°C to 40°C	-10°C to 40°C
E	Inductive	NAMUR	3mA,8Vdc	NJ2-V3-N	-50°C to 50°C	-20°C to 40°C		-10°C to 40°C	-10°C to 40°C
X	Analog Transmitter	4-20mA	8.5–34Vdc		-50°C to 50°C	-30°C to 40°C		-10°C to 40°C	-10°C to 40°C
Class I & II Division 2 Non-incendive / Zone 2, 22									
					No Valve			With Valve	
Switch	**Type**	**Output**	**Rating**	**Model**	**TVH/TVL**	**TVF**		**TVH/TVL/TVF**	
AS	Bus Network	AS-interface	20-30Vdc		-40°C to 85°C	-40°C to 50°C		-40°C to 50°C	
DN	Bus Network	DeviceNet	11-25Vdc		-40°C to 85°C	-40°C to 50°C		-40°C to 50°C	
PB	Bus Network	Profibus DP	22-26Vdc		-40°C to 85°C	-40°C to 50°C		-40°C to 50°C	
R	Reed	SPDT	1A/24Vdc, 200mA/120Vac		-40°C to 95°C	-50°C to 60°C		-50°C to 60°C	
P	Reed	SPDT	3A, 120V		-40°C to 95°C	-50°C to 60°C		-50°C to 60°C	
X	Analog Transmitter	4-20mA	8.5–34Vdc		-40°C to 55°C	-40°C to 55°C		-40°C to 55°C	
E	Inductive	NAMUR	3mA, 8Vdc	NJ2-V3-N	-50°C to 60°C	-50°C to 60°C		-50°C to 60°C	
4	Inductive	0-100mA	10-30Vdc, 100 mA max	NBB2-V3-E2	-50°C to 60°C	-50°C to 60°C		-50°C to 60°C	
5	Inductive	0-100mA	5-60Vdc, 100mA max	NBB2-V3-Z4	-50°C to 60°C	-50°C to 60°C		-50°C to 60° C	

*TVF only Zone 1 = UL + ATEX + IECEx = UL = ATEX + UL

Note - The above temperatures are safety temperatures and not operating temperatures.

Pilots (Solenoids)

The TV line will accommodate up to two pilots. This allows the products to be used with double acting actuators and gives the option of having a fail last position. There are four different pilot options:

24vdc, 0.7W – Used only with IS and Div 2 approvals

24vdc, 1.0W – Used only with no approvals and Zone 2

110vac, 3va (volt amps) – Used only with no approvals

220vac, 3va – Used only with no approvals

Product Markings

The TV line carries ATEX, IECEx and NEC approvals for intrinsic safety and non-incendive applications.

North American Marking (NEC)

TVF, TVL, TVH

Class I Division 1, Groups A, B, C, D	IS / Div 1
Class II Division 1, Groups E, F, G	
Class I Division 2, Groups A, B, C, D	Non-incendive / Div 2
Class II Division 2, Groups F and G	

ATEX/IECEx

TVF, TVL, TVH

Ex ia IIC T4 Gb	Zone 1

TVL, TVH

Ex tb IIIC T135°C Db, IP64	Zone 21
Ex nA nC IIC T4 Gc or Ex nA nC IIC T3 Gc	Zone 2
Ex tc IIIC T70°C Dc, IP64 or Ex tc IIIC T115°C Dc, IP64	Zone 21

*Note - Zone 2 approval, i.e., Ex nA nC is only available with the "P" and "R" switch

Protection Method Explained

Europe - CENELEC, IEC

The ATEX Directive 94/9/EC controls the manufacture and import of electrical and nonelectrical equipment for use in explosive atmospheres in the European Union. ATEX requires that the equipment be safe, and bear a label indicating the conditions under which it is approved for use. All ATEX equipment must bear the CE marking.

The IECEx scheme is controlled by the International Electotechnical Commission, and covers electrical equipment for use in explosive atmospheres. IECEx uses different codes, but the codes are very similar, if not verbatim, in most cases, to the ATEX codes and standards.

TVF Label

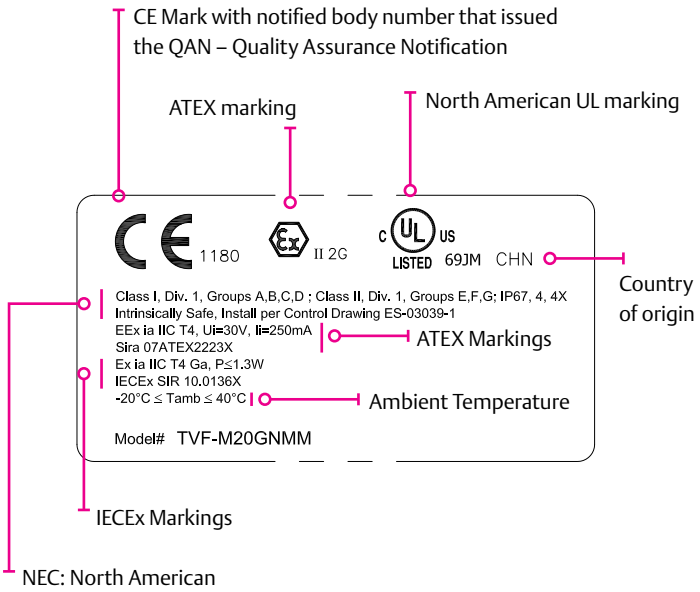

Zones Explained

Zones are predominantly based on the IEC and European Committee for Electrical Standardization (CENELEC) standards. There are three Zones for gases and three Zones for dusts. Zone 0, 1, and 2 are for gases and Zone 20, 21 and 22 are for dusts. The different Zone meanings are:

Zone 0, 20 = A hazardous atmosphere is highly likely to be present and be present for long periods of time.

Zone 1, 21 = A hazardous atmosphere is possible but unlikely to be present for long periods of time

Zone 2, Zone 22 = A hazardous atmosphere is not likely to be present in normal operation or infrequently and for short periods of time.

Zones and Divisions are comparable as each will define the likelihood of a hazardous atmosphere being present, but there is overlap. For example, Div 1 states the possibility of a hazardous atmosphere being present is likely under normal operating conditions, while Zone 0 states that there is a continuous presence of a hazardous atmosphere, and Zone 1 states that more than likely there is a hazardous presence. Zone 0 and 1 fall under Division 1 and Division 2 is equivalent to Zone 2.

Zone 0	Division 1
Zone 1	
Zone 2	Division 2

The Zone method marks equipment in accordance to the type of protection used by the equipment.

Example – **Ex ia IIC**: This product marking states that the product is intrinsically safe.

Division equipment are marked in accordance to the area that the equipment is classified to be used in.

Example – **Class II Division 1, Groups A-D**: The product marking states what area classification the product can be used in.

ATEX and IECEx Markings Explained

II 2 GD

Equipment Group
II — Electrical equipment intended for use in places with an explosive gas atmosphere other than mines susceptible to firedamp, i.e., above ground equipment

Environment
G-Gas: Zone 0, 1, 2
D-Dust: Zone 20, 21, 22

Equipment Category
1 — Very high safety level . For use in Zone 0, 1, 2 , 20, 21, 22
2 — High protection level. For use in Zone 1, 2, 21, 22
3 — Normal protection level. For use in Zone 2, 22

Gas Markings

Ex ia IIC Gb T4, Ui=30V, Ii=250mA

Equipment Protection Level (EPL)
This EPL documents the basic suitability of an apparatus for a specific zone. The letters "G" and "D" defines whether the apparatus can be used in an area containing gas or dust. The second letter, "a", "b" or "c" states what zone the product can be used in. Example Ga=Zone 0, Gb=Zone 1, Gc=Zone 2

Electrical Equipment used in explosives atmospheres
Ex=marking according to IEC or ATEX based on new EN standards
EEx=marking according to ATEX based on old EN standards

Entity Parameters
Ui = Maximum allowable voltage under fault conditions

Ii = Maximum allowable current under fault conditions

These parameters are controlled by the use of a barrier

Protection Method
ia – Intrinsically Safe – Meaning energy limited. The protection method is the circuitry and not the enclosure; as such the product is inherently safe.

nA nC – No arcs, sparks, or heat. "nA" is a non-sparking device, like inductive switches. "nC" is a hermetically –sealed device like a GO switch or reed switch

Gas Group
IIA – Propane
IIB – Ethylene
IIC – Hydrogen, Acetylene
IIC gas groups encompasses IIA and IIB

Temperature Classifications
This code states the maximum surface temperature of the product when used within the stated Ambient Temperature range – Example, if the product is used within -20°C to +40°C the surface temperature will not be greater than T4 or 135°C

Dust Markings

Temperature Classifications
Same as the gas marking except with dust. The maximum possible surface temperature is printed as a real value in deg. C.

Electrical Equipment used in explosives atmospheres
Ex=marking according to IEC or ATEX based on new EN standards

EEx=marking according to ATEX based on old EN standards

Ex tb IIIC T135C Db IP64

Ingress Protection (IP)
First digit – protection against solids/dust
Second digit – protection against liquids

IP64: 6=dust-tight (no ingress), 4=splashed water from any direction
IP65: 6=dust-tight, 5=water jets
IP66: 6=dust-tight, 6=heavy jets from any angle
IP67: 6=dust-tight, 7= ½ hours immersion to a depth of 1 meter
IP68: 6=dust-tight, 8=at least 24 hours immersion to a depth over 1m

Protection Method
"t": Protected by enclosure – Meaning the enclosure provides a dust free environment for the electronics.

ta = Zone 20, tb = Zone 21, tc = Zone 22

Equipment Protection Level (EPL)
This EPL documents the basic suitability of an apparatus for a specific zone. The letters "G" and "D" defines whether the apparatus can be used in an area containing gas or dust. The second letter, "a", "b" or "c" states what zone the product can be used in. Example Da=Zone 20, Db=Zone 21, Dc=Zone 22

Dust Group
IIIA – Combustible flyings
IIIB – Non-conductive dust
IIIC – Conductive dust
(IIIC dust groups encompasses IIIA and IIIB)

North American/NEC Markings

NEMA Enclosure Definitions
Type 4 – Intended for indoor or outdoor use primarily to provide a degree of protection against windblown dust and rain, splashing water, and hose-direct water; and to be undamaged by the formation of ice on the enclosure

Type 4X – The "X" provides protection against corrosion

Class I
Locations in which flammable gases are or may be present in the air in quantities sufficient to produce explosive or ignitable mixtures

Class II
Locations in which combustible dusts are present, dusts are defined as any finely divided solids material 420 microns or less in diameter

Class III
Locations in which easily ignitable fibers are present – cotton, hemp...

Class I Division 1, Groups A, B, C, D; 4, 4X
Class II Division 1, Groups E, F, G

Division 1
Location where there is or may be an explosive atmosphere of gases or dusts mixed with air present during normal operation

Division 2
Location where there is an explosive atmosphere of gases or dusts mixed with under abnormal conditions, i.e., failure of a ventilation system

Gas Groups
Group A: Acetylene
Group B: Hydrogen, Butadiene, Ethylene Oxide....
Group C: Methyl Ether, Carbon Monoxide, Ethylene....
Group D: Acetone, Ammonia, Butane, Gasoline, Propane...
Any gas in group C can be used in group B.....

Dust Groups
Group E: Combustible metal dusts – Aluminum, Magnesium...
Group F: Carbonaceous dusts – Coal, Charcoal, Coke dusts...
Group G: Combustible dusts – Flower, Grain, Wood, Plastic...
Note: Dust group "E" is not used in Div. 2

GLOBAL SUPPORT OFFICES

Americas
3300 Fern Valley Road
Louisville, Kentucky 40213 USA
+1 502 969 8000
info.topworx@emerson.com

Asia-Pacific
1 Pandan Crescent
Singapore 128461
+65 6891 7550
info.topworx@emerson.com

Europe
Horsfield Way
Bredbury Industrial Estate
Stockport SK6 2SU
United Kingdom
+44 0 161 406 5155
info.topworx@emerson.com

Middle East
P.O. Box 17033
Jebel Ali Free Zone
Dubai 17033
United Arab Emirates
+971 4 811 8283
info.topworx@emerson.com

Africa
24 Angus Crescent
Longmeadow Business Estate East
Modderfontein
Gauteng
South Africa
+27 11 451 3700
info.topworx@emerson.com

Visit www.topworx.com for comprehensive information on our company, capabilities, and products – including model numbers, data sheets, specifications, dimensions, and certifications.

www.topworx.com

© 2015 TopWorx. All rights reserved. TopWorx, Valvetop, GO Switch, VIP and Leverless Limit Switch are all trademarks of TopWorx. The Emerson logo is a trademark and a service mark of Emerson Electric. Co.

© 2015 Emerson Electric Company. All other marks are the property of their respective owners. Information herein – including product specifications – is subject to change without notice.

GO SWITCH

TOPWORX

EMERSON Process Management

ES-03655-1 R2