Shafer

Technical Bulletin MPH-0297

Subject: Manual hydraulic pumps

The purpose of the manual hydraulic pump on any actuator using hydraulics for power is to provide a means of moving the actuator in the event that no power gas or oil is available.

The Shafer hydraulic pump has undergone many design improvements. This bulletin is to describe these improvements and address the safety issues surrounding any manual hydraulic hand pump that does not have a balanced ram.

The first vintage of pumps to have wide use on Shafer actuators simply used a suction and discharge ball between the ram and selector disc (fig. 1) as a means of directing oil in and out of the pump. In a short time a design flaw was recognized. If the operator attempted to move the actuator using power gas, with the pump still selected to open or close, there was a possibility of uncontrolled upward movement of the ram and clevis.
If you have one of these pumps still in use on your actuators it should be replaced as soon as possible.

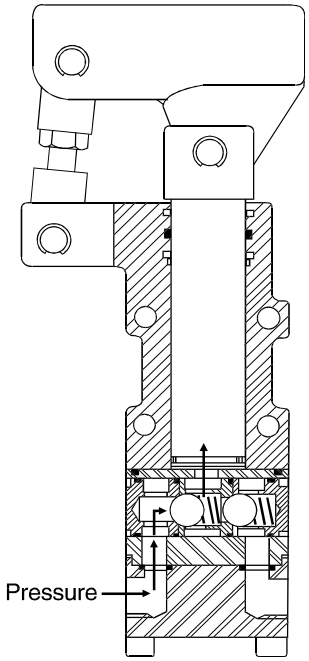

Figure 1

All of the old pumps were redesigned to add safeguards to eliminate the possibility of this uncontrolled movement of the pump ram. The “safety kit” (fig. 2 and 3) added to each pump works on the premise that if pressure enters the suction/discharge area of the pump a piston connected to the suction ball will pull the suction ball to its seat and hold it there. This occurs because the safety kit piston has an area larger than the suction ball. The difference in area causes the safety to close. An external cover was added on later models for protection from sand blasting and painting.

Figure 2

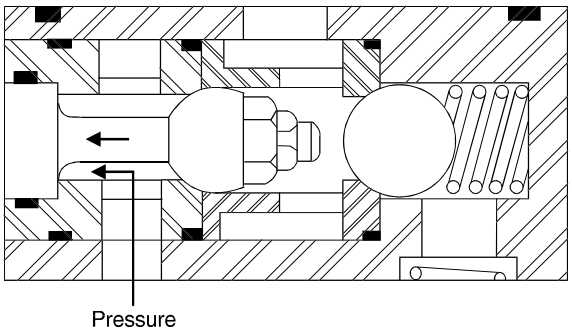

Figure 3

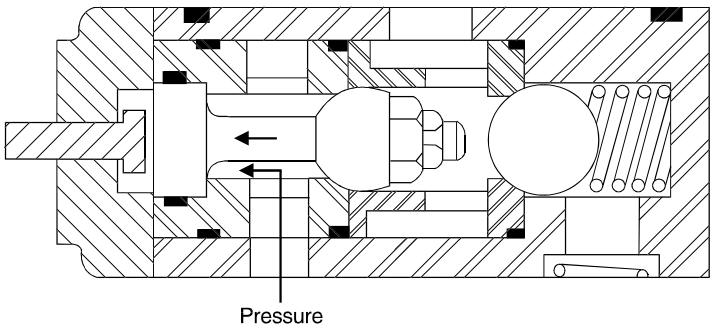

As long as the safety kit is working properly there is no danger associated with the “old” hand pumps when used properly. However, misuse of the pump coupled with failure of the safety kit, usually due to accumulated paint, can still present a safety concern.

A qualified technician should inspect, and if needed, repair the old pumps on your equipment if they are to be kept in service.

Some simple signs indicating that your pumps need repair are as follows:

- Pump will not produce pressure to move actuator.
- Pump ram and clevis raise when the actuator is stroked using power gas.
- Safety kit button does not move freely when pumping.

Another disadvantage to the “old” style of pumps is that if the pump is inadvertently left selected to the open or close pumping mode any remote or automatic function the actuator may be equipped with will not work because the hydraulic flow path to and from the actuator will be blocked.

More detailed check out procedures are printed in the pump service manual. Contact your service representative for this material or call Shafer Valve Operating Systems 800-876-4311.

Although these safety concerns come into play only if the pump is misused, any possibility of unwanted upward movement of the ram and clevis was deemed unacceptable. The pumps were totally redesigned at this point to the current standard pumps. The “new” style hand pumps have features built into them to remove all safety concerns, even through misuse, and functional limitations.

The standard pumps have many advantages over the old Shafer pumps such as improvements in materials, coatings, etc. In this bulletin we will discuss only the two most important ones.

- Balanced ram design
- Self neutralization

The balanced ram design incorporated in the new pumps simply means that the area on top of the pump piston is exactly the same as the area underneath (fig. 4). This “balanced” ram prevents the ram from any movement in the event an internal seal failure allows pressure into the suction/discharge area of the pump.

Caution: Never store the pump handle in the clevis of any hand pump that does not have a balanced ram design..

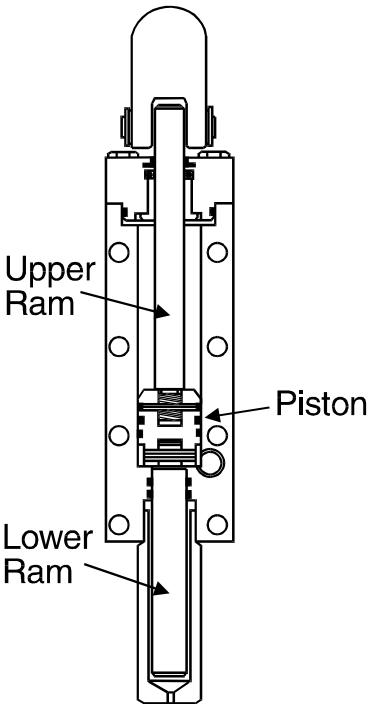

Figure 4

Self neutralization takes away the risk of human error rendering your actuators inoperable. As previously stated if the old pumps are left in one of the selected positions the actuator could not move. This could be a very detrimental condition if these actuators are on valves that must open or close in an emergency. The “neutralizing”, or return to the automatic position, is accomplished as follows. If the standard pump is left selected to either the open or close mode and the actuator needs to be stroked using power gas, the hydraulic pressure enters cross drillings in the selector body (fig. 5) and returns the selector sleeves to the outward, or automatic, position opening the hydraulic flow paths allowing the actuator to stroke. The hydraulic pressure will return the pump to the neutral or automatic position regardless of whether the pump was selected to the open or close pumping mode.

Figure 5

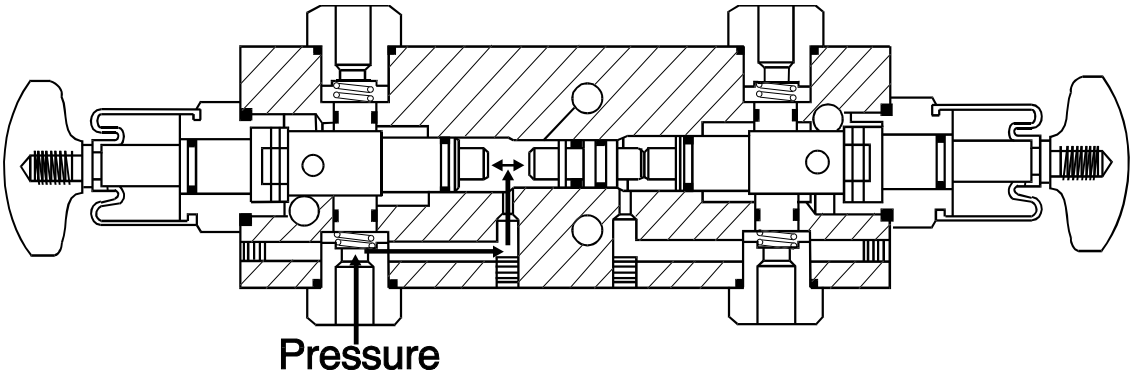

If the standard Central/Hydraulic pump is left selected to either the open or close mode and the actuator needs to be stroked using power oil, the hydraulic pressure enters cross drillings in the selector body (fig. 6) and returns the selector sleeve to the centered, or automatic, position opening the hydraulic flow paths allowing the actuator to stroke. The hydraulic pressure will return the pump to the neutral or automatic position regardless of wether the pump was selected to the open or close pumping mode.

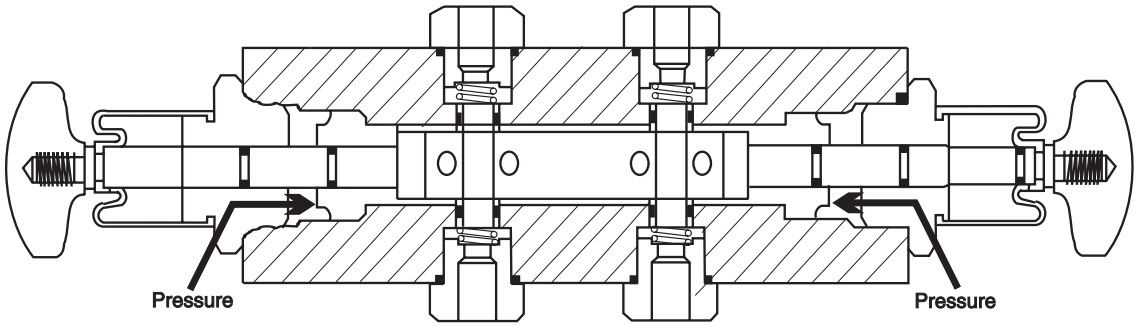

Figure 6

When working with any actuator, technicians should be trained to always isolate the power source and vent any trapped gas or power oil in the actuator before moving the valve with the manual hand pump or hand wheel. This may require that a power storage tank or accumulator also be drained or blown down. Power gas, power oil, instrument air and electrical supply can be used individually or in combinations to power actuators.

Service and maintenance brochures are available not only for the old and new pumps but also for pumps incorporating a double holding valve, Rotary Vane actuators, Linear actuators, old style poppet block controls and the standard poppet block control. Instructional videos illustrating the proper check out and reconditioning procedures are also available for these products for a nominal charge. Contact your Shafer service or sales representative for more information or call Shafer Valve Operating Systems at 800-876-4311.