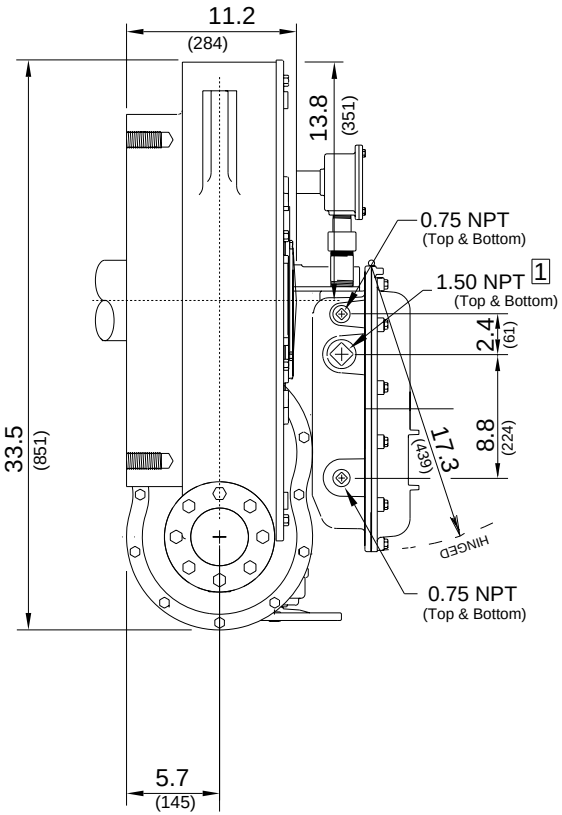

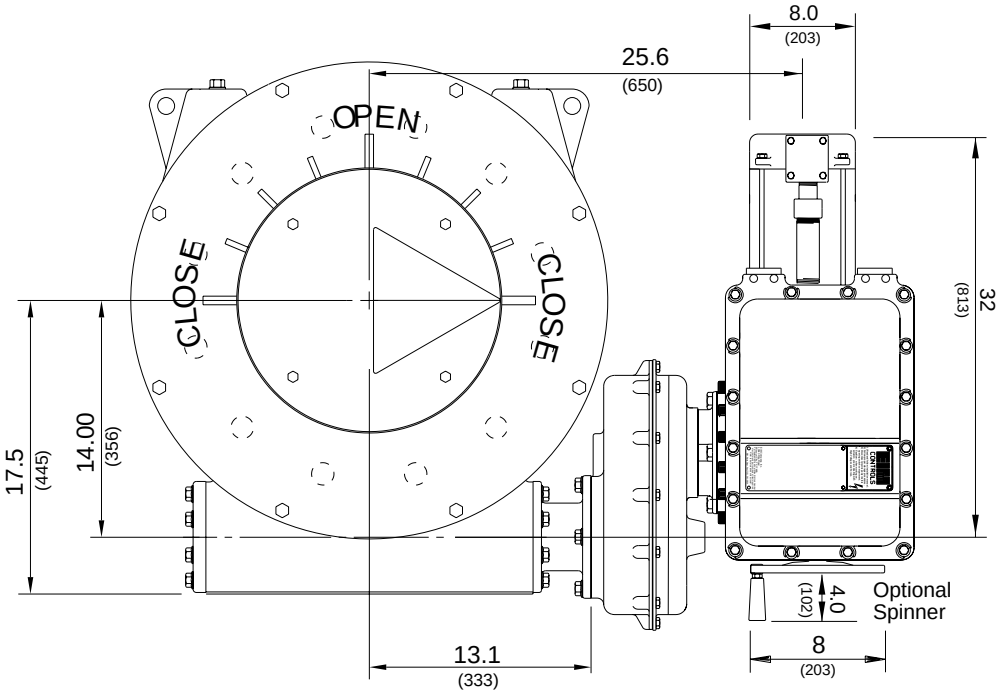

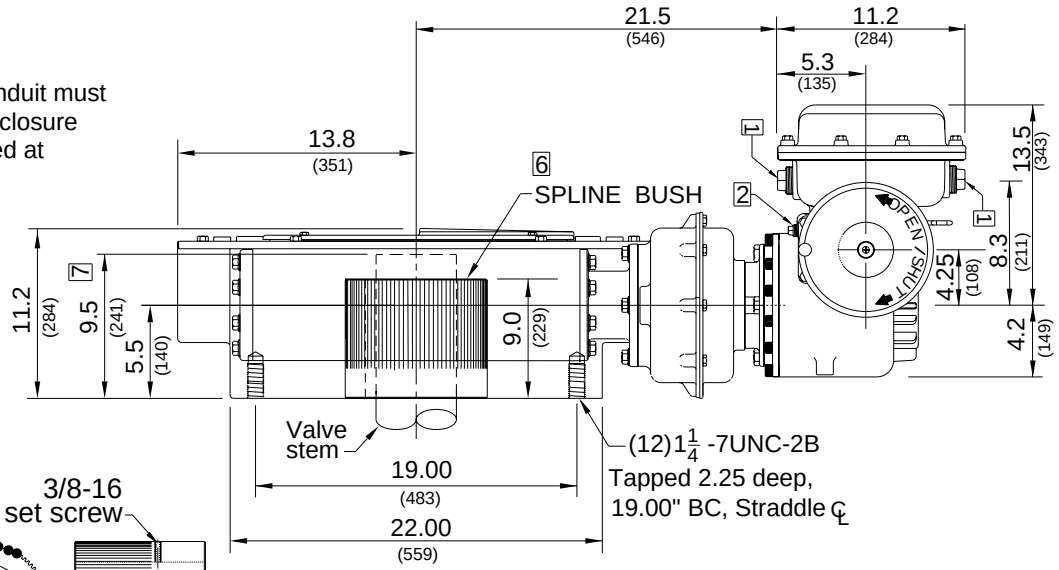

1 1.50-11.5 NPT (2 places) is preferred wire entry ***CAUTION*** Conduit must enter at lowest point to prevent water from entering electrical enclosure due to condensation. If hazardous location, conduit seal required at electrical enclosure entrances.

2 Lubrication 0.50-14 NPT plugs.

3 For electrical control pilot device elements mounted on actuator control cover, see EIM job spec sheet & wiring diagram furnished for each specific EIM job number.

4) WARNING - The installation and servicing instructions are for use by qualified personnel only. To avoid injury and electric shock, do not perform any service on EIM equipment unless qualified.

5) Installation shall be in accordance with current edition of National Electrical Code.

6 Spline Bush: Removable from the bottom of actuator. Refer to EIM Job Spec Sheet for Bushing furnished for specific application.

7 Maximum Valve Stem Length

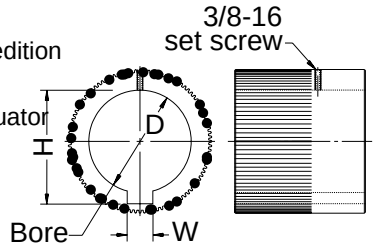

SPLINE BUSH

INCHES .XXX ± .005"
(MILLIMETERS) .XX ± .020"
.X APPROX.

REV	DATE	ERO	BY
A	5/22/97	10878	CML

EIM CONTROLS
EIM COMPANY, INC.
13840 PIKE ROAD
MISSOURI CITY, TX 77489

TITLE W / GB3 / MG07 1/4T

OUTLINE NO. W-7A02/48G REV A

FORM 0008-C