Reference Manual
00809-0100-4379, Rev AA
March 2006

Rosemount 753R with iTrax® Remote Web Based Monitoring Indicator

Product Discontinued February 2010

ROSEMOUNT®

www.rosemount.com

EMERSON™
Process Management

Rosemount 753R Web Based Monitoring Indicator

NOTICE

Read this manual before working with the product. For personal and system safety, and for optimum product performance, make sure you thoroughly understand the contents before installing, using, or maintaining this product.

Rosemount Inc. has two toll-free assistance numbers:

Customer Central
Technical support, quoting, and order-related questions.

United States - 1-800-999-9307 (7:00 am to 7:00 pm CST)

Asia Pacific- 65 777 8211

Europe/ Middle East/ Africa - 49 (8153) 9390

North American Response Center
Equipment service needs.

1-800-654-7768 (24 hours—includes Canada)

Outside of these areas, contact your local Rosemount® representative.

⚠CAUTION

The products described in this document are NOT designed for nuclear-qualified applications. Using non-nuclear qualified products in applications that require nuclear-qualified hardware or products may cause inaccurate readings.

For information on Rosemount nuclear-qualified products, contact your local Rosemount Sales Representative.

Table of Contents

SECTION 1
Introduction

Using This Manual 1-1
Service Support 1-2
753R Overview 1-2
iTrax® Overview 1-2
Functionality 1-2
Using iTraX® Online Help 1-3
Technical Assistance 1-3

SECTION 2
Installation

Overview 2-1
Safety Messages 2-1
Warnings 2-1
General Considerations 2-3
Mechanical Considerations 2-3
Environmental Considerations 2-3
Battery Disposal Instructions 2-3
Installation Procedures 2-4
Site Evaluation 2-4
Device Installation 2-4
Consider Housing Rotation 2-4
LCD Meter Rotation 2-5
Consider RPS Positioning 2-5
Connect Wiring and Power Up for Integrated Transmitters 2-6
Connect Wiring and Power Up for Remote Mounted Transmitters 2-7
Hazardous Locations 2-8
Grounding the Wireless Indicator Case 2-8
Decommissioning Procedures 2-8
Physical/Process Decommissioning 2-9
Service Decomissioning 2-9

SECTION 3
Web Interface-
Connectivity

Overview 3-1
Starting iTraX® 3-1
Navigating the iTraX® Application Window 3-2
Application Menu 3-2
Application Workspace 3-2
User Help 3-2
E-Mail Assistance 3-2
Reset 3-2
Account 3-3
User Profile 3-3
Managing iTraX® Accounts 3-4
Edit Existing Account 3-4
Set Up New Account 3-5
Changing Users 3-6
Security Provisions 3-6

SECTION 4
Web Interface-Configuration and Maintenance

Overview 4-1
Device Configuration 4-1
Measurement 4-2
Alert 4-3
Query Request 4-4
E-Mail Notification 4-5
General 4-6
Discrete Output 4-7
Discrete Input 4-7
Master Reset 4-7

SECTION 5
Web Interface-Data Viewing

Overview 5-1
Summary Reports 5-1
History Reports 5-3
Alert Reports 5-5

SECTION 6
Troubleshooting

Overview 6-1
Safety Messages 6-1
  Warnings 6-1
Troubleshooting 6-2
Disassembly Procedures 6-3
  Remove from Service 6-3
  Remove from Service 6-3
  Remove Terminal Block 6-3
  Remove Assembly 6-4
  Remove the SuperModule from the Housing 6-4
Reassembly Procedures 6-5
  Attach the SuperModule to the Housing 6-5
  Install Assembly in the PlantWeb Housing 6-5
  Install the Terminal Block 6-5
  Device ID 6-5

APPENDIX A
Reference Data

Functional Specifications A-1
Physical Specifications A-2
Dimensional Drawings A-2
Ordering Information A-5
iTraX® Transmission Ordering Information A-5

APPENDIX B
Product Certifications

Overview B-1
Approved Manufacturing Locations B-1
Telecommunication Compliance B-1
Ordinary Locations Certifications B-1
Hazardous Locations Certifications B-1
  North American Certifications B-1

Section 1 Introduction

Using This Manual . . . . . **page 1-1**
Service Support . . . . . **page 1-2**
753R Overview . . . . . **page 1-2**
iTrax® Overview . . . . . **page 1-2**

USING THIS MANUAL

The sections in this manual provide information on installing, operating, and maintaining the Rosemount 753R Web Based Monitoring Indicator. At the end of each section there is information related to integrated units (a 753R combined with a Rosemount transmitter). The sections are organized as follows:

- **Section 2: Installation** contains mechanical and electrical installation instructions, including remote power supply and wireless communications. This section also includes instructions on how to install the 753R monitor when integrated with various Rosemount transmitters.
- **Section 3: Web Interface-Connectivity** contains instructions for iTraX® start-up and account maintenance.
- **Section 4: Web Interface-Configuration and Maintenance** provides instruction on commissioning and operating 753R Series monitors. Information on software functions, configuration parameters, and on-line access through the iTraX® website also are included.
- **Section 5: Web Interface-Data Viewing** contains operation and maintenance techniques for the iTraX® interface.
- **Section 6: Troubleshooting** provides troubleshooting techniques for the most common operating problems for the 753R Series Monitoring Indicator and the iTraX® web interface.
- **Appendix A: Reference Data** contains product specifications, certifications, dimensional drawings, ordering information, and the Configuration Data Sheet.
- **Appendix B: Product Certifications** contains intrinsic safety approval information and standard compliance information.

SERVICE SUPPORT

To expedite the return process outside of the United States, contact the nearest Rosemount representative.

Within the United States, call the Rosemount National Response Center using the 1-800-654-RSMT (7768) toll-free number. This center, available 24 hours a day, will assist you with any needed information or materials.

The center will ask for product model and serial numbers, and will provide a Return Material Authorization (RMA) number. The center will also ask for the process material to which the product was last exposed.

⚠CAUTION

Individuals who handle products exposed to a hazardous substance can avoid injury if they are informed of and understand the hazard. If the product being returned was exposed to a hazardous substance as defined by OSHA, a copy of the required Material Safety Data Sheet (MSDS) for each hazardous substance identified must be included with the returned goods.

Rosemount National Response Center representatives will explain the additional information and procedures necessary to return goods exposed to hazardous substances.

753R OVERVIEW

Rosemount 753R with iTraX® web interface is the leading web based monitoring solution which enables the user to monitor geographically dispersed assets such as vendor managed inventory (VMI). The 753R will also support any two-wire HART transmitter for monitoring applications in pressure, temperature, analytical, or level processes. The iTraX® web interface is accessible via www.rosemount.com and can provide monitoring information at up to 15 minute update intervals.

Rosemount 753R with iTraX® web interface allows the user to monitor remote assets which do not otherwise have access to a local host for data collection. Remote bulk inventory monitoring is the most common, though not the only, application of this innovative solution. Through iTraX®, the user is able to:

- Reconfigure how often readings and transmissions can be made as monitoring needs change
- Create or modify setpoints for measurement alarm conditions
- Create or modify device alert conditions based on available device diagnostics
- Configure email/text message distribution for alarm notifications
- Reconfigure other device parameters via the iTraX® interface

ITRAX® OVERVIEW

Functionality

iTraX® is a web based monitoring interface that allows users to communicate with remote transmitters to set device configurations, monitor and collect measurement data, generate reports, and receive e-mail alert notifications.

NOTE
Web based monitoring is intended for monitoring operations only, and is not intended for any control operations. Data is not designed to integrate into Distributed Control Systems.

Automating the remote monitoring process provides a significant improvement over traditionally manual operations, saving time and money while eliminating costly human data recording and interpolation error.

Some of the applications that are best suited for the Rosemount 753R web based monitoring solution include:

- Improved Inventory Management
- Paper Chart Recorder Replacement (Future)
- Pipeline Metering (Future)

Using iTraX® Online Help

To access iTraX® on-line help information at any time, select the question mark image in the upper right corner of the screen( ).

Technical Assistance

For problems or questions that cannot be resolved through the iTraX® manual or on-line Help, contact your local Emerson Process Management Representative. For iTraX® e-mail assistance, click on the E-Mail image in the upper right corner of the screen ( ).

Section 2 Installation

Overview . . . . . **page 2-1**
Safety Messages . . . . . **page 2-1**
General Considerations . . . . . **page 2-3**
Mechanical Considerations . . . . . **page 2-3**
Environmental Considerations . . . . . **page 2-3**
Battery Disposal Instructions . . . . . **page 2-3**
Installation Procedures . . . . . **page 2-4**
Hazardous Locations . . . . . **page 2-8**
Decommissioning Procedures . . . . . **page 2-8**

OVERVIEW

The information in this section covers installation considerations for the Rosemount 753R Series indicator. A Quick Installation Guide (document number 00825-0100-4379) is shipped with every indicator to describe basic installation and configuration options. For 753R wireless indicators that are shipped as an integrated unit with a pressure transmitter, a Quick Installation Guide for that transmitter is also included. It describes basic pipe fitting and wiring procedures for transmitter installation.

SAFETY MESSAGES

Procedures and instructions in this section may require special precautions to ensure the safety of the personnel performing the operation. Information that raises potential safety issues is indicated with a warning symbol (⚠). Refer to the following safety messages before performing an operation preceded by this symbol.

Warnings

⚠WARNING

Explosions can result in death or serious injury.

- Do not remove the wireless indicator covers in explosive environments when the circuit is live.
- Before connecting a communicator in an explosive atmosphere, make sure the instruments in the loop are installed in accordance with intrinsically safe or non-incendive field wiring practices.
- Verify that the operating atmosphere of the wireless indicator is consistent with the appropriate hazardous locations certifications.

⚠WARNING

Electrical shock can result in death or serious injury.

- Avoid contact with the leads and terminals

⚠WARNING

Replacement equipment or spare parts must be approved by Rosemount Inc. for use. Spare parts not approved my Rosmount Inc. could reduce performance and may render the instrument dangerous.

- Use only bolts supplied or sold by Rosemount Inc. as spare parts
- For attached sensors, refer to the respective manual for replacement equipment and spare parts information.

⚠WARNING

The unit must be installed in a manner that provides a minimum separation distance of 8 inches (20 centimeters) or more between the antenna and personnel in order to satisfy FCC RF exposure requirements for mobile transmitting devices.

⚠WARNING

Web based monitoring is intended for monitoring opoerations only, and is not intended for any control operations. Data is not designed to integrate into Distributed Control Systems. iTraX® data can be made available through optional connectivity. Contact factory for more information.

⚠WARNING

Keep any source of fire or electrical sparking away from the Remote Power Supply (RPS) battery.

⚠WARNING

Battery disposal is the responsibility of the customer. Batteries must be disposed of properly.

⚠WARNING

Sealed batteries can emit hydrogen if overcharged. Temperatures over 572 °F (300 °C) may release combustible gases from battery.

⚠WARNING

When installing a Rosemount 753R with an Intrinsic Safety transmitter, use the appropriately sized Intrinsic Safety barrier.

GENERAL CONSIDERATIONS

Measurement accuracy depends upon proper installation of the sensor and accessories. Mount the wireless indicator according to best practices for the installation environment. Also, consider the need for easy access, personnel safety, signal transmission integrity, access to power lines or direct or indirect sunlight, and a suitable wireless indicator environment. Install the wireless indicator to minimize vibration, shock, and temperature fluctuation. For integrated units, see transmitter-specific literature for more detailed installation instructions.

RPS solar panel must be clean and clear of objects that could block access to sunlight.

Due to the self discharge characteristics of the battery, it must be charged after 6-9 months of storage; otherwise, permanent loss of capacity might occur as a result of sulfation

MECHANICAL CONSIDERATIONS

Avoid installing antenna around or near any large motors or other equipment that could create strong Radio Frequency Interference (RFI).

ENVIRONMENTAL CONSIDERATIONS

Following suggested access requirements and proper transmitter mounting and cover installation procedures can help optimize transmitter performance. See “transmitter-specific” manual for details.

Direct or indirect sunlight is required for optional RPS to function.

If disposing of a battery, follow specified instructions below.

A Material Safety Data Sheet for the battery is available upon request.

BATTERY DISPOSAL INSTRUCTIONS

Power-Sonic Sealed Maintenance Free Lead-Acid Batteries (Model No. PS-612) Rosemount Part No. 753-9002-0001

Waste Disposal Method:

Spent batteries must be treated as hazardous waste and disposed of according to local, state, and federal guidelines. A copy of the MSDS must be supplied to any scrap dealer or secondary lead smelter along with the battery.

MSDS: www.power-sonic.com

Replacement batteries should be the same make and model as the factory issued battery.

INSTALLATION PROCEDURES

Site Evaluation

The 753R installation site must meet the following criteria for proper operation:

1. Access to a power source
   a. Direct or indirect sunlight for Remote Power Supply, or
   b. 6 to 24 VDC line power
2. Installation location within cellular (GPRS) coverage area

Device Installation

Installing the 753R Communications Housing

1. Mount the 753R upright using the appropriate brackets and fixtures.
2. Mount remote measurement transmitter(s) as recommended by its respective installation instructions.

Installing a 753R with Integrated Pressure Transmitter

1. Mount the 753R with integrated pressure transmitter consistent with its respective Quick Installation Guide.

NOTE
Best practice is to install the device in a vertical and upright position.

Position the antenna in a vertical orientation for best signal reception.

Consider Housing Rotation

The electronics housing can be rotated up to 180 degrees in either direction to improve field access, to improve operational functions, or to better view the optional LCD meter. To rotate the housing, perform the following procedure:

753R Housing

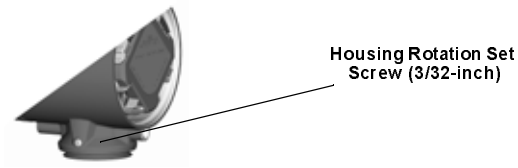

1. Loosen the housing rotation set screw using a 3/32-in. hex wrench.
2. Rotate the housing clockwise to the desired location. If the desired location cannot be achieved due to thread limit, rotate the housing counter clockwise to the desired location (up to 360° from the thread limit).
3. Retighten the housing rotation set screw to 20 inch pounds.

LCD Meter Rotation

In addition to housing rotation, the optional LCD meter can be rotated in 90-degree increments. To rotate the LCD meter, remove the front housing cover (this may require a wrench). Squeeze the two tabs located on the sides of the LCD meter and lift the meter out. Rotate the LCD meter to the desired direction and snap back into place. Replace the front housing cover and tighten.

NOTE
The jumpers may come loose while removing the LCD meter. Be sure that they are fully seated in the housing before snapping the LCD meter into place.

Consider RPS Positioning

When installing the optional Remote Power Supply (RPS), position the solar panel so that it has the best possible access to sunlight throughout the day. If direct sunlight access is not available, indirect (reflected) sunlight sources can be used.

Connect Wiring and Power Up for Integrated Transmitters

Wiring for HART Protocol

Figure 2-1. 753R Wiring Diagram With Integrated Transmitter

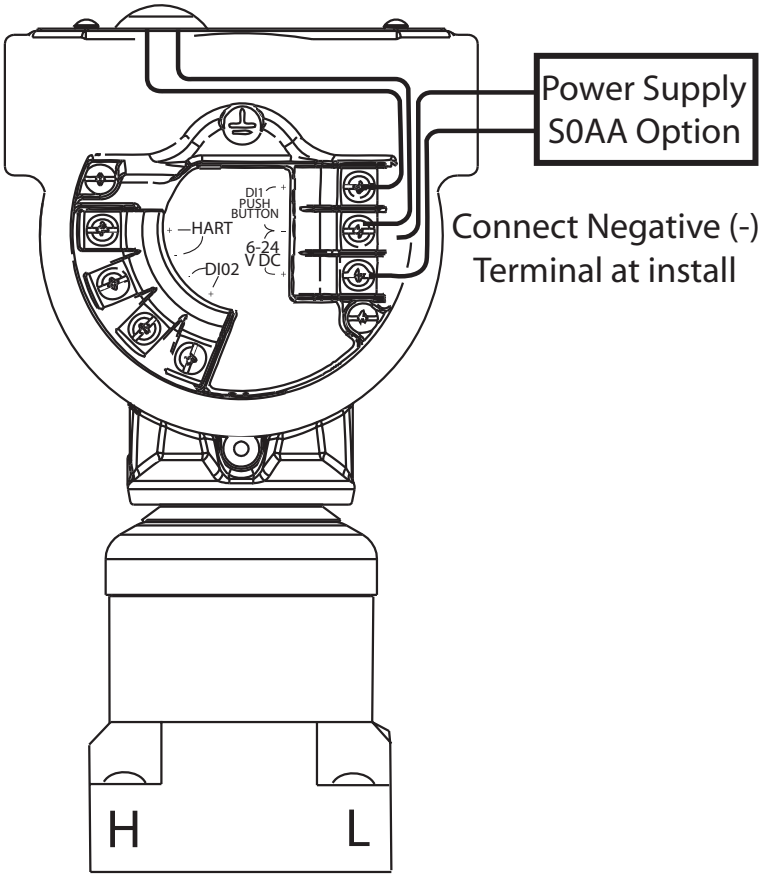

To make connections, perform the following procedure:

1. Remove the housing cover on terminal compartment side. Do not remove the cover in explosive atmospheres when the circuit is live. Power for the connected HART® transmitter is supplied by the 753R.
2. Connect the positive lead to the terminal marked (+) and the negative lead to the terminal marked (pwr/comm -). Avoid contact with leads and terminals. Do not connect powered signal wiring to the HART® terminals.
3. Plug and seal unused conduit connections on the wireless indicator housing to avoid moisture accumulation in the terminal side. Install wiring with a drip loop. Arrange the drip loop so the bottom is lower than the conduit connections and the wireless indicator housing.

Connect Wiring and Power Up for Remote Mounted Transmitters

Figure 2-2. 753R Wiring Diagram With Remote Mounted Transmitter

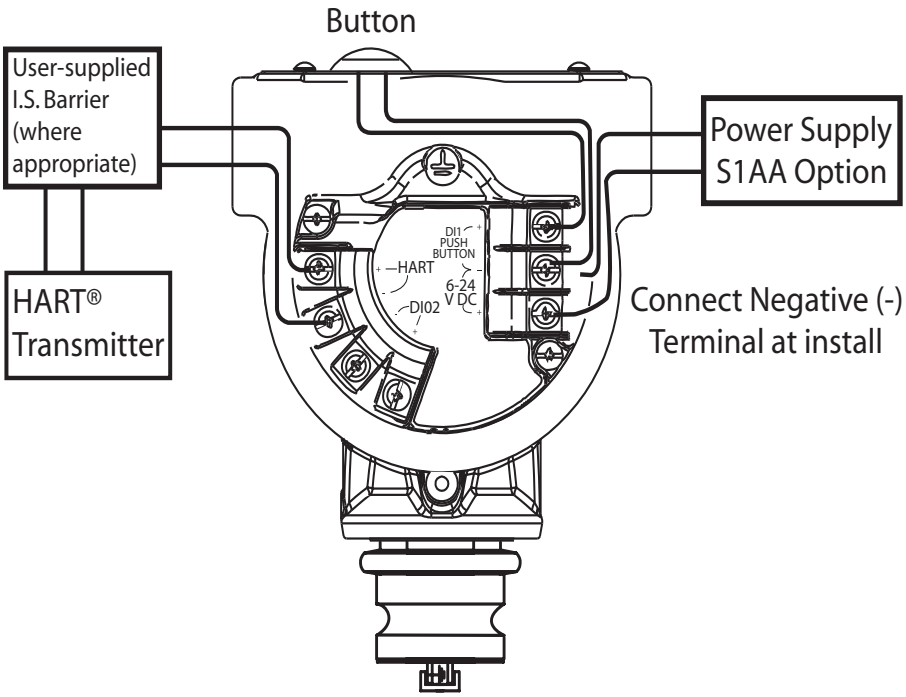

To make connections, perform the following procedure:

1. Remove the housing cover on terminal compartment side. Do not remove the cover in explosive atmospheres when the circuit is live. Power for the connected HART® transmitter is supplied by the 753R.
2. For remote measurement transmitter configuration, connect HART® as follows:
   a. Install the transmitter as recommended by the manufacturer's instructions (including the user-supplied Intrinsic Safety barrier if necessary)
   b. Connect the HART® (+) and (-) wiring to the terminals.
3. Connect the positive lead to the terminal marked (+) and the negative lead to the terminal marked (pwr/comm -). Avoid contact with leads and terminals. Do not connect powered signal wiring to the HART® terminals.
4. Plug and seal unused conduit connections on the wireless indicator housing to avoid moisture accumulation in the terminal side. Install wiring with a drip loop. Arrange the drip loop so the bottom is lower than the conduit connections and the wireless indicator housing.

Signal Wiring Grounding

Do not run signal wiring in conduit or open trays with power wiring, or near heavy electrical equipment.

HAZARDOUS LOCATIONS

The Rosemount 753R and any attached devices must be installed according to the guidelines and certifications listed in their respective user manuals.

NOTE
Once a device labeled with multiple approvals is installed, it should not be reinstalled using any other approval type(s). Permanently mark the certification label to distinguish the installed approval type from unused approval types.

Grounding the Wireless Indicator Case

Always ground the wireless indicator case in accordance with national and local electrical codes. The most effective wireless indicator case grounding method is a direct connection to earth ground with minimal impedance. Methods for grounding the wireless indicator case include:

- **Internal Ground Connection**: The Internal Ground Connection screw is inside the terminal side of the electronics housing. The screw is identified by a ground symbol (⏚), and is standard on all Model 753R Series indicators.

DECOMMISSIONING PROCEDURES

Please be familiar with all warnings before attempting to decommission your 753R. See “Warnings” on page 2-1.

⚠WARNING

Explosions can result in death or serious injury.

- Do not remove the wireless indicator covers in explosive environments when the circuit is live.
- Before connecting a communicator in an explosive atmosphere, make sure the instruments in the loop are installed in accordance with intrinsically safe or non-incendive field wiring practices.
- Verify that the operating atmosphere of the wireless indicator is consistent with the appropriate hazardous locations certifications.

⚠WARNING

Electrical shock can result in death or serious injury.

- Avoid contact with the leads and terminals

Physical/Process Decommissioning

753R with Inegral Pressure Transmitter

Please refer to the pressure transmitter manual for physical detachment from the process.

753R with Remote Power Supply

Open the side of the housing marked **FIELD TERMINALS**. Disconnect the **negative (-)** terminal from the power supply.

753R with Line Power Supply

Open the side of the housing marked **FIELD TERMINALS**. Disconnect the **negative (-)** terminal from the power supply.

Service Decomissioning

Please call RCC to cancel the iTraX® service. Tag information will be needed to complete the decommissioning process.

Warning - service charges will continue to be billed unless a decommission request is made with Rosemount.

Section 3 Web Interface-Connectivity

Overview . . . . . **page 3-1**
Starting iTraX® . . . . . **page 3-1**
Navigating the iTraX® Application Window . . . . . **page 3-2**
Navigating the iTraX® Application Window . . . . . **page 3-2**
Account . . . . . **page 3-3**
Managing iTraX® Accounts . . . . . **page 3-4**
Security Provisions . . . . . **page 3-6**

OVERVIEW

This section contains information about how to use iTraX® interface.

STARTING ITRAX®

To start iTraX®:

1. Open a web browser and enter the following site URL: https://www.emersonprocess.com/rosemount/products/accessories/m753_content.html
2. Select the iTraX® icon at the top of th page or from the ITraX® tab at the bottom.
3. In the iTraX® User Login, enter your User ID and Password and click the “Login” button.

Figure 3-1. User Login

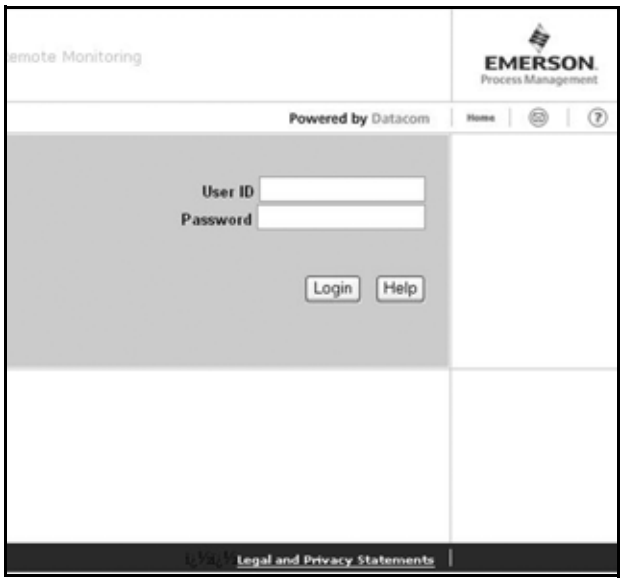

753/LOGINAB.TIFS

NOTE
The master User ID cannot be changed by the user. It is permanently assigned by Rosemount as the account holder name for the user. If it is lost or forgotten, contact RCC.

NAVIGATING THE ITRAX® APPLICATION WINDOW

The iTraX®Application Window allows you to easily navigate the website and features the following components:

Application Menu

The Application menu allows for quick and easy selection of the desired functions which include:

- Reports - to view Summary, History, and Alert reports for any device
- Configuration - to set configurations for each device, including general, measurement, alert, query request, and e-mail notification configurations
- Account - manages account settings, including user profile and additional accounts. Current user may also reload or log out from this area.

Application Workspace

The Application Workspace allows the user to view tables, enter data and manage iTraX® account information.

User Help

The User Help button provides access to the on-line manual with directions on how to resolve problems and implement desired applications.

E-Mail Assistance

The E-mail Assistance button allows the user to send an e-mail request for information or help beyond the scope of the manual and on-line help.

Reset

The Reset button (not shown) is found on each data entry page. Clicking the Reset button returns all data entry spaces on a page to the default settings.

Figure 3-2. iTraX® Application Window

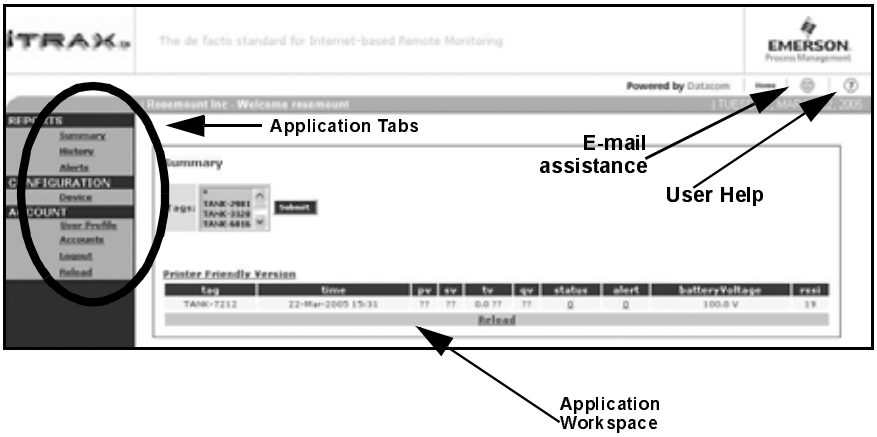

ACCOUNT

User Profile

The User Profile page allows the user to view current user settings.

Time Zone

To change the Time Zone setting:

1. Select the **Time Zone** for this account using the drop-down menu.
2. Choose the appropriate region.
3. Click **Save**.

Figure 3-3. User Profile Settings

Password

To change the User Password:

1. Select the **Change Password** link on the User Profile page.
2. Enter the **Old Password** in the field provided.
3. Determine a new password and enter it in the **New Password** field.
4. Re-enter the password in the **Confirmed New Password** field to confirm proper spelling.
5. Click **Submit** to activate the new password.
6. If a User Password is forgotten, it can be found using the User Master account.

Figure 3-4. Change User Password

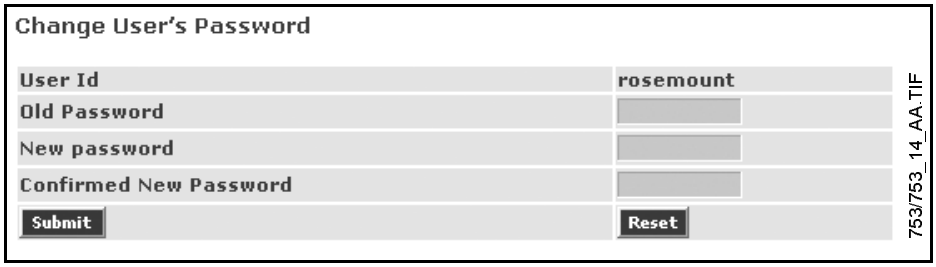

MANAGING ITRAX® ACCOUNTS

The iTraX® Account Management page lets you add or create additional sub-accounts to a User ID. It also provides the time and date that the account was established and when it is scheduled to expire.

To delete an account, click on the **Delete** link next to the account login you wish to remove.

Figure 3-5. Account Management

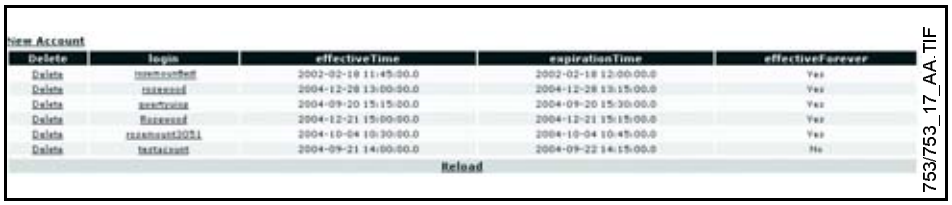

Edit Existing Account

To change the settings of an existing account:

1. Select the highlighted login name you wish to edit.
2. Change any of the desired settings which include:
   - **Effective** - date and time that account access begins.
   - **Expiration** - date and time that account access ends.
     - Selecting the **Never Expires** box continues access indefinitely and overrides the expiration setting.
   - **Time Zone** - Set the appropriate time zone to the specific user location.
   - **Tags** - Set tags that the specific account user may access.
   - **Access Rights** - A check mark in this box lets the user change device configurations.

Figure 3-6. Edit Account

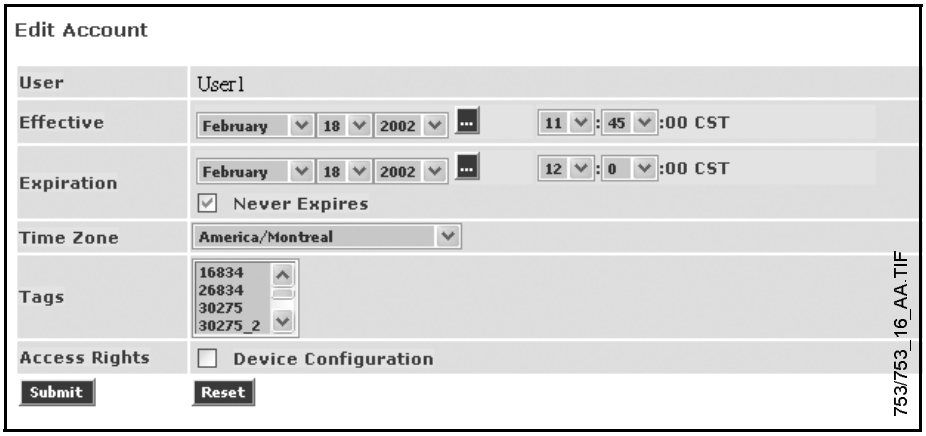

Set Up New Account

To create a New Account:

1. Select the **New Account** link in the Account Management page.
2. Choose a **User ID** for this specific account user and enter it in the box.
3. Choose a **Password** for this specific account user and enter it in the box.
4. Set the **Effective** date and time that the user account is active.
5. Set the **Expiration** date and time, if desired. If a specific account expiration date and time is not desired or is currently unknown, check the **Never Expires** box.
6. Choose the **Time Zone** appropriate to the location of the user.
7. Choose the **Tags** that the user is given access to.
8. If desired, give the user **Device Configuration** access rights by putting a check mark in the box.
9. Click **Submit** to establish the new account.

Figure 3-7. New Account Setup

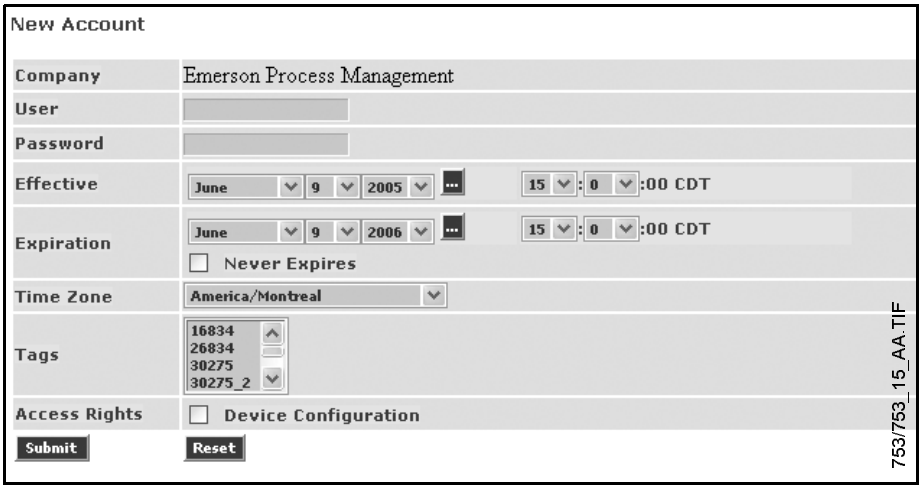

Changing Users

To change users during an active session:

1. Click the **Logout** option on the left menu.
2. Enter the new **User ID** and **Password** information on the main screen.
3. Click **Submit**.

Figure 3-8. Logout

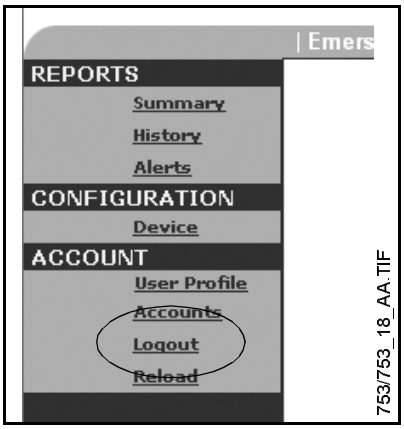

SECURITY PROVISIONS

The iTraX® internet portal incorporates several key security provisions to ensure that data storage is both reliable and secure:

- **Password Protection** - Ensures that only the intended users have access to transmitter data. It is recommended that users change the login password regularly to provide additional security.
- **Website User Access Time-out** - When the iTraX® interface remains unused for 15 minutes, the user must re-enter login information.
- **Centralized, Secure Server** -The iTraX® system stores all user data on a secure, third party server.
- **Encrypted/Authenticated Data Transmissions** - The iTraX® system secures data through state-of-the-art encryption and authentication techniques.
-

Section 4 Web Interface-Configuration and Maintenance

Overview . . . . . **page 4-1**
Device Configuration . . . . . **page 4-1**
Measurement . . . . . **page 4-2**
Alert . . . . . **page 4-3**
Query Request . . . . . **page 4-4**
E-Mail Notification . . . . . **page 4-5**
General . . . . . **page 4-6**
Discrete Output . . . . . **page 4-7**
Discrete Input . . . . . **page 4-7**
Master Reset . . . . . **page 4-7**

OVERVIEW

This section contains information on configuration of the 753R indicator. Full device configuration is performed via the iTraX® web interface.

DEVICE CONFIGURATION

The device configuration section of the iTraX® website allows you to select the particular device tag you wish to configure through a pull-down menu. To access the device configuration, click the device on the left menu.

Once you have selected the device you wish to configure, the following configuration options are available:

- **Measurement** - Change the device tag name; Set device measurement parameters; Set transmission parameters; Enter an e-mail address to receive a configuration acknowledgement.
- **Alerts** - Set alert parameters; Define effective and expiration dates; Configure e-mail settings to receive electronic alert notification.
- **Query Request** - Request configuration from a transmitter at the next transmission.
- **E-mail Notification** - Establish e-mail addresses that will receive electronic data transmissions during device operation.
- **General** - Configure settings related to the physical device; Enter an e-mail address to receive a configuration acknowledgement.
- **Discrete Output** - Set discrete output parameters; Enter an e-mail address to receive a configuration acknowledgement.
- **Discrete Input** - See factory for availability.
- **Master Reset** - Perform a master reset of selected device tags; Enter an e-mail address to receive a configuration acknowledgement.

Figure 4-1. Device Configuration

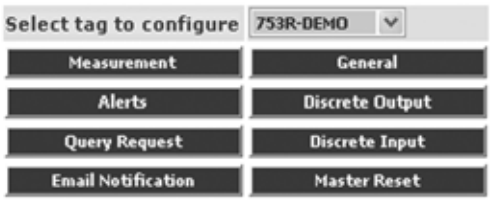

753_02_AA.TIF

MEASUREMENT

Measurement configuration allows you to set or change the following measurement parameters for any transmitter:

- **Edit Tag Name** - wireless indicators are shipped with pre-configured tag names that are tied to the Device ID. Tag names can be changed at any time by entering a new name in the space provided and clicking the Submit button.
- **Type** - Choose from the following options to describe the specific device identified by the Tag Name:
  - No Device
  - HART Device
- **Variables to Transmit** - Select any of the following HART transmitter variables to transmit:
  - **PV** - Primary Variable (1st)
  - **SV** - Secondary Variable (2nd)
  - **TV** - Tertiary Variable (3rd)
  - **QV** - Quaternary Variable (4th)
- **Read/Transmit Interval** - Set the interval for reading and transmitting data.
- **HART Address** - Select the HART multidrop address either by allowing the system to assign it automatically (Auto), or by choosing an address between 1 and 15 that matches the connected HART® Transmitter.
- **Turn-On Time** - Enter the number of seconds that the HART® Transmitter requires to provide valid data. (default is 2 seconds, refer to respective HART® Transmitter manual for best practices)
- **Device ID** - Indicates the HART ID of the installed transmitter.
- **Acknowledgement E-mail** - Enter an e-mail address to receive an acknowledgement of the changes to the measurement configuration settings, if desired.
- **Submit** - After all settings have been chosen, click Submit to activate the settings.

Example:

The following example shows a HART device with the tag name 753-MVT1-02 transmitting Primary and Secondary Variables. The transmit interval is set to read every 15 minutes and transmit every hour at HART Address 1. Turn-On time is set to 4 seconds.

Figure 4-2. Measurement Configuration

ALERT

To establish a new Alert setting, follow these steps:

1. **Alert Number** - Choose a number from the drop down menu 1-10.
2. **Alert Mode** - Toggle between **Enable**, to activate the Alert settings for a particular Tag, and **Disable**, to deactivate the Alert settings for a particular Tag. Note that when an alert is set to Disable, the settings remain in the system, but no alarm notifications are sent.
3. **Alert Name** - Enter a name in the space provided to label the alert.
4. **Variable Assignment** - Select which variable activates the alert:
   a. **PV** - Primary Variable
   b. **SV** - Secondary Variable
   c. **TV** - Tertiary Variable
   d. **QV** - Quaternary Variable
5. **Direction** - Select which direction of change will activate the alarm:
   a. **Rising** - Activates the alert when the measured variable rises past the pre-determined alert set point.
   b. **Falling** - Activates the alert when the measured variable falls below the pre-determined alert set point.
   c. **Both** - Activates the alert when the measured variable moves across the pre-determined alert set point (rising or falling).
6. **Unit** - Select which unit of measurement (e.g., psi) applies to the measured variable. The unit must match the unit selected in the attached HART™ transmitter.
7. **Set Point** - Set the numeric value that represents the point at which the measured variable should activate the alert notification.
8. **Dead Band** - Set the numeric value that represents how far the variable must return beyond the set point before the device resets from an alert status.
9. **E-mail Notification** - An electronic alert notification is sent to the Operations E-mail account when the alert is activated. Subject and Message spaces are provided to offer additional details regarding the specific alert notification being distributed.
10. **Acknowledgement E-mail** - Enter an e-mail address to receive an acknowledgement of the changes to the alert configuration settings, if desired.
11. **Submit** - After all settings have been chosen, click Submit to activate the settings.

Example:

The following example shows configuration for a Disable Alert Mode at Low Level for the Primary Variable. It also shows the email notification message that will be delivered when the alarm is triggered.

Figure 4-3. Alert Configuration

Latching behavior

When a measurement crosses a predefined setpoint, the 753R sends an alert back to the iTraX® website. The 753R then waits for the measurement to move a certain amount back within the “safe operating range” before resetting the alert. This delay is called “dead band” and helps prevents rapid on/off cycling of alerts.

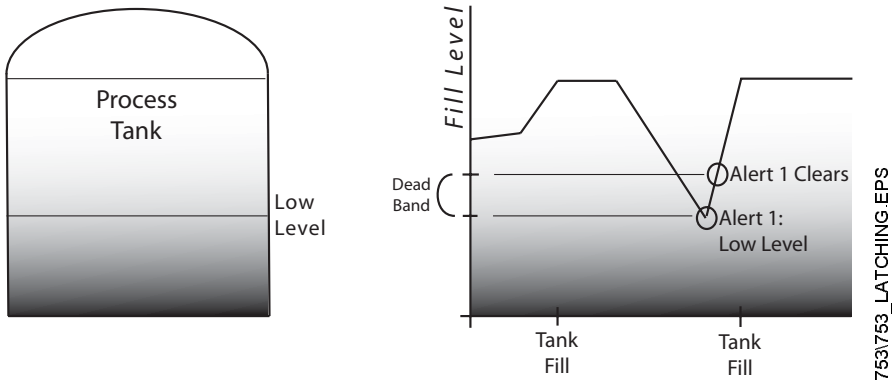

QUERY REQUEST

To perform a Query Request, which confirms teh 753R configuration parameters via email at the next transmission:

1. Select the desired data type from the available **Query Type** list.
2. Enter an e-mail address in the space provided next to **Query E-mail** that the data will be sent to.
3. Click **Submit** to process the request.

Example:

The following example shows configuration for a General Query Request.

Figure 4-4. Query Request Configuration

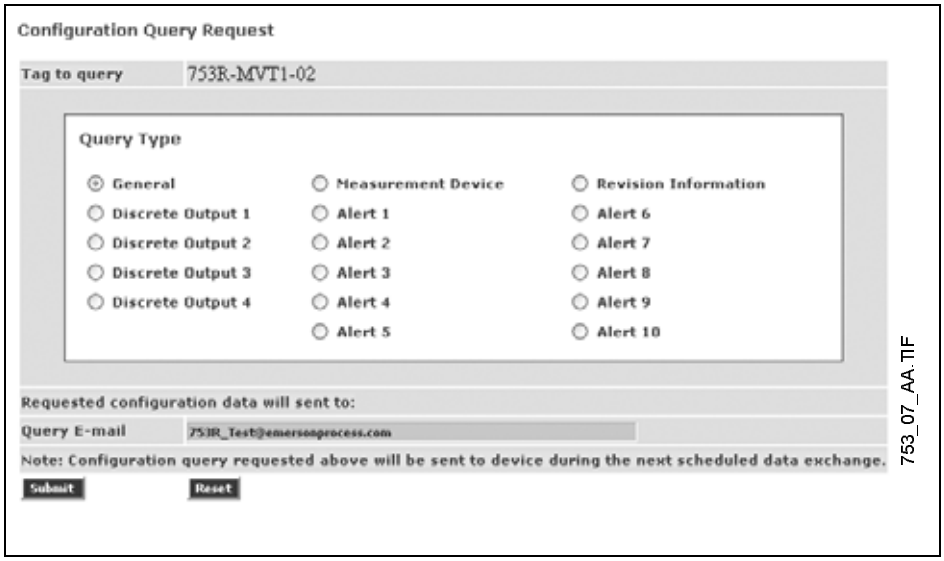

E-MAIL NOTIFICATION

The notification e-mail configuration page lets the user set up e-mail accounts that will receive electronic notifications related to the selected tags.

E-mail accounts that may be entered include:

- **Maintenance E-mail**
- **Operations/Dispatch E-mail**
- **General E-mail**

Click Submit to process the settings.

Figure 4-5. E-Mail Notification Configuration

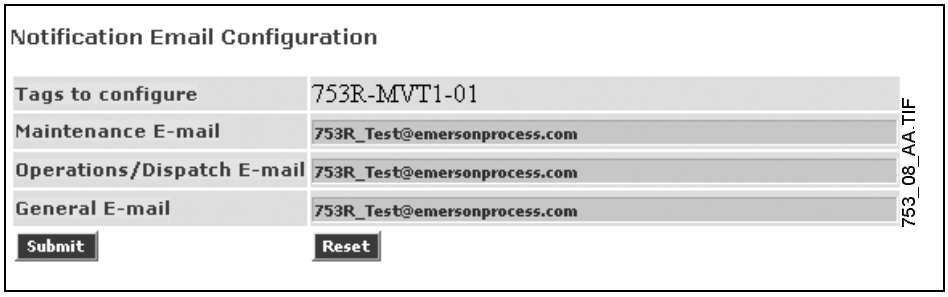

GENERAL

The general configuration settings let the user change the following settings:

- **Button Event Time-out** - Sets the time, in seconds, that the local LCD screen displays data when the local user interface button has been pressed.
- **Power Mode** - Toggle the power mode of the wireless indicator between two settings:
  - Normal - The wireless indicator is maintained in a power-saving sleep mode until it is powered up to perform an operation. After operation, the wireless indicator returns to the sleep mode. This setting is best when the device is powered locally with a Remote Power Supply (RPS).
  - Always On - The wireless indicator is in constant power mode (does not enter a sleep mode when not operating). This power mode should only be used for devices that are line powered through a continuous power supply.

NOTE
When used with the RPS, Always On mode will deplete the battery at a higher rate than normal.

- **Acknowledgement E-mail** - Enter an e-mail address to receive an acknowledgement of the changes to the general configuration settings, if desired.
- **Submit** - After all settings have been chosen, click Submit to activate the settings.

Example:

The following example shows the General Configuration settings. Button Event Time-out is set to 30 min. in normal Power Mode.

Figure 4-6. General Configuration

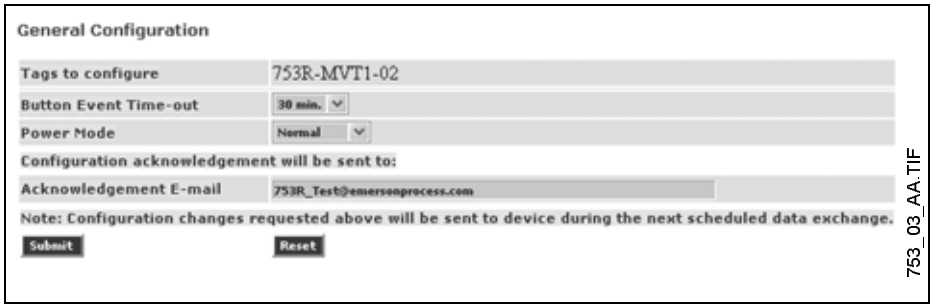

DISCRETE OUTPUT

Discrete Output functionality is only available when the Rosemount 753R is ordered with the Y1 Discrete I/O option.

To configure the Discrete Output settings of selected Tags, follow these steps:

1. **DO Mode** - Toggle this setting to **Enable** or **Disable** the Discrete Output option
2. **DO Trigger Alert** - Set the alert that will trigger Discrete Output.
3. **DO Direction** - The DO Direction can be set to Low>High or High>Low (see Alert on page 4-3 for more information).
4. **Acknowledgement E-mail** - Enter an e-mail address to receive an acknowledgement of the changes to the discrete output configuration settings, if desired.
5. **Submit** - After choosing all settings, click **Submit** to activate.

Example:

The following example shows configuration for the Discrete Output. It shows that DO Mode is enabled, DO Trigger Alert is Low Level (Disabled), and the DO Direction is Low>High.

Figure 4-7. Discrete Output Configuration

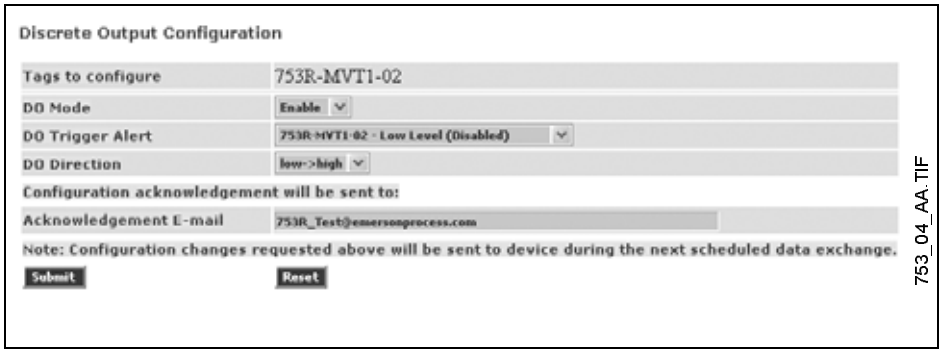

DISCRETE INPUT

See factory for availability.

MASTER RESET

The iTraX® Master Reset option performs a “reboot” of the selected wireless indicators directly from the website. The reboot will occur at the next scheduled transmission.

To activate a master reset operation:

1. **Acknowledgement E-mail** - Enter an e-mail address to receive an acknowledgement of the Master Reset.
2. **Submit** - Click Submit to activate the master reset.

Example: The following example shows configuration for five tags to be reset.

Figure 4-8. Master Reset

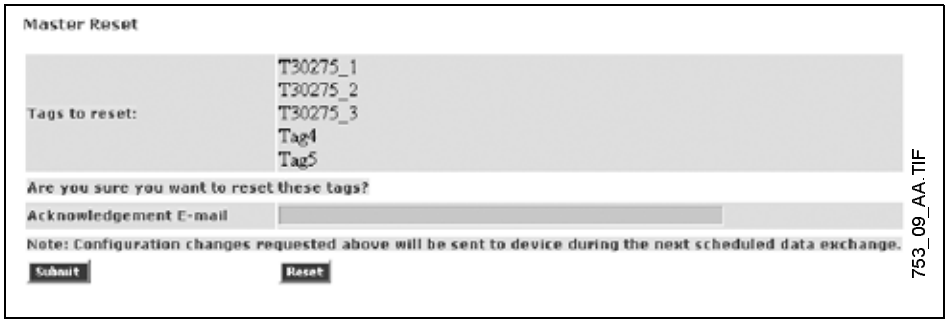

Section 5 Web Interface-Data Viewing

Overview . . . . . **page 5-1**
Summary Reports . . . . . **page 5-1**
History Reports . . . . . **page 5-3**
Alert Reports . . . . . **page 5-5**

OVERVIEW

This section contains information on operation and maintenance techniques for the Rosemount 753R wireless indicator.

SUMMARY REPORTS

This page allows the user to view a **Summary Report** that presents operational status and the latest read information for each wireless indicator in the user account.

To view a summary of wireless indicator data:

1. Select the desired **Tag(s)** by one of the following options:
   - Choose one specific tag by highlighting it
   - Choose multiple tags by holding the Control (Ctrl) button on the keyboard and selecting all desired tags
   - Choose all applicable tags by selecting the asterisk (*)
2. Click **Submit**.

Summary Report data includes:

- **Tag** - Identifier associated with a specific wireless indicator.
- **Time** - The last time that a reading was made by the identified wireless indicator.
- **PV** - Primary Variable measurement reading
- **SV** - Secondary Variable measurement reading
- **TV** - Tertiary Variable measurement reading
- **QV** - Quaternary Variable measurement reading
- **Status** - Indicates any current operational problems with a specific wireless indicator, which can be viewed by clicking on the highlighted value. Potential problems that may be identified include:

Table 5-1. Status Messages

753R Cold Start	First message since power was applid or a master reset occurred	No action
753R Device Malfunction	Malfunction of 753R indicator	Reconfigure all settings or replace unit
753R Low Battery	Battery voltage is low	Recharge or replace battery

Table 5-1. Status Messages

753R DB Overrun	Buffer memory exceeded capacity	No action required
Slave Device Disconnected	Transmitter not reporting to 753R	Check connections and/or HART™ address
Slave Device Malfunction	Slave device is reporting a malfunction	Replace HART™ transmitter, refer to HART™ device manual for corrective action
Slave Device Configuration Error	Alert unit mis-match or device address mis-match	Check Alert units and/or see device replacement instructions
Discrete Output Active	Alert has caused the DO to be activated	No action required
Button Error	Button event active or in process	No action required
Slave Device Saturated	HART transmitter saturated	See device manual or check process
Data Packet Checksum Error	Data associated with a packet implies an error; could be corrupted	If error persists, call RCC
753R Power Always On	Device in Power Always On mode	If desired mode, no action required. If not desired, change power mode.

- **Alert** - Indicates any current alert notifications attributable to a specific wireless indicator tag name, which can be viewed by clicking on the highlighted value for detailed alert information.
- **Battery Voltage** - Current voltage level of the wireless indicator's battery.
- **RSSI** - Radio Signal Strength Indicator - Shows the strength of the radio signal reception at the specific device location.
- **Received Time** - Shows the time that the data was received.

Figure 5-1. Summary Report

HISTORY REPORTS

This page allows the user to generate a historical report on any device tag. To view a history report of wireless indicator data, use the following steps:

1. Select the desired **Tag(s)** by one of the following options:
   - Choose one specific tag by highlighting it
   - Choose multiple tags by holding the Control (Ctrl) button on the keyboard and selecting all desired tags
   - Choose all tags by selecting the asterisk (*)
2. Choose a starting date and time in the **From:** data entry section by either using the pull-down menus or clicking on the "…" icon to access an interactive calendar.
3. Choose an ending date and time in the **To:** data entry section by either using the pull-down menus or clicking on the "…" icon to access an interactive calendar.
4. Click **Submit**.

NOTE
Click **Reload** to refresh the page with the current settings.

History Report data includes:

- **Tag** - Identifier associated with a specific wireless indicator.
- **Time** - The time the reading was taken by the identified wireless indicator.
- **PV** - Primary Variable measurement reading
- **SV** - Secondary Variable measurement reading
- **TV** - Tertiary Variable measurement reading
- **QV** - Quaternary Variable measurement reading
- **Status** - Indicates any current operational problems with a specific wireless indicator, which can be viewed by clicking on the highlighted value. Potential problems that may be identified include:

Table 5-2. Status Messages

753R Cold Start	First message since power was applid or a master reset occurred	No action
753R Device Malfunction	Malfunction of 753R indicator	Reconfigure all settings or replace unit
753R Low Battery	Battery voltage is low	Recharge or replace battery
753R DB Overrun	Buffer memory exceeded capacity	No action required
Slave Device Disconnected	Transmitter not reporting to 753R	Check connections and/or HART™ address
Slave Device Malfunction	Slave device is reporting a malfunction	Replace HART™ transmitter, refer to HART™ device manual for corrective action
Slave Device Configuration Error	Alert unit mis-match or device address mis-match	Check Alert units and/or see device replacement instructions
Discrete Output Active	Alert has caused the DO to be activated	No action required
Button Error	Button event active or in process	No action required
Slave Device Saturated	HART transmitter saturated	See device manual or check process
Data Packet Checksum Error	Data associated with a packet implies an error; could be corrupted	If error persists, call RCC
753R Power Always On	Device in Power Always On mode	If desired mode, no action required. If not desired, change power mode.

- **Alert** - Indicates any current alert notifications attributable to a specific wireless indicator tag name, which can be viewed by clicking on the highlighted value for detailed alert information.
- **Battery Voltage** - Voltage level of the wireless indicator's battery at the time of the transmission.
- **RSSI** - Radio Signal Strength Indicator - Shows the strength of the radio signal reception at the specific device location.
- **Received Time** - Shows the time that the data was received.

Figure 5-2. History Report

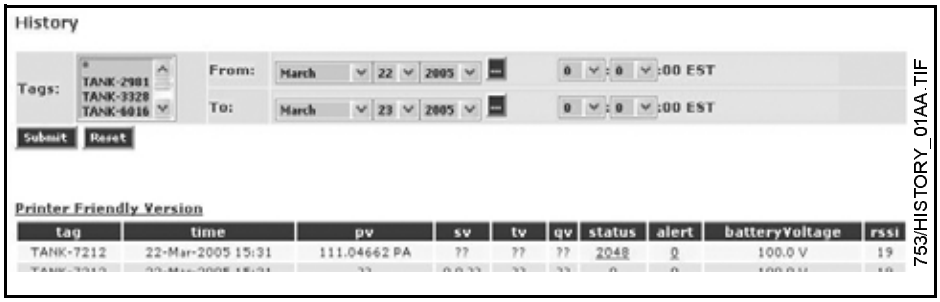

ALERT REPORTS

The Alert Report page allows the user to generate a summary of alerts associated with a specific device. To view a history report of alert data, use the following steps:

1. Select the desired **Tag** by highlighting it from the list of available tags.
2. Choose the desired **Alert(s)** by one of the following options:
   - Choose one specific alert by highlighting it
   - Choose multiple alerts by holding the Control (Ctrl) button on the keyboard and selecting all desired tags
   - Choose all applicable alerts by selecting the asterisk (*)
3. Choose a starting date and time in the **From:** data entry section by either using the pull-down menus or clicking on the "…" icon to access an interactive calendar.
4. Choose an ending date and time in the **To:** data entry section by either using the pull-down menus or clicking on the "…" icon to access an interactive calendar.
5. Click **Submit**.

Alert Report Summary data includes:

- **TagName** - Identifier associated with a specific wireless indicator.
- **AlertName** - Identifies all current alert notifications attributable to a specific wireless indicator tag name, which can be viewed by clicking on the highlighted value for detailed alert information.
- **Count** - Indicates the number of occurences of the associated alert within the selected time span.

Alert Report Details data includes:

- **TagName** - Identifier associated with a specific wireless indicator tag name.
- **Time** - The time the alert was generated.
- **Battery** - Current voltage level of the wireless indicator battery.
- **Alert Name** - Label for the alert that was set by the user.
- **Variable** - Identifies the specific variable being measured.
- **Value** - Last measured numeric value associated with the identified variable.
- **Threshold** - Value of the variable that will activate an alert.
- **Status** - Indicates any current operational problems with a specific wireless indicator, which can be viewed by clicking on the highlighted value. Potential problems that may be identified include:

Table 5-3. Status Messages

753R Cold Start	First message since power was applied or a master reset occurred	No action
753R Device Malfunction	Malfunction of 753R indicator	Reconfigure all settings or replace unit
753R Low Battery	Battery voltage is low	Recharge or replace battery
753R DB Overrun	Buffer memory exceeded capacity	No action required

Table 5-3. Status Messages

Slave Device Disconnected	Transmitter not reporting to 753R	Check connections and/or HART™ address
Slave Device Malfunction	Slave device is reporting a malfunction	Replace HART™ transmitter, refer to HART™ device manual for corrective action
Slave Device Configuration Error	Alert unit mis-match or device address mis-match	Check Alert units and/or see device replacement instructions
Discrete Output Active	Alert has caused the DO to be activated	No action required
Button Error	Button event active or in process	No action required
Slave Device Saturated	HART transmitter saturated	See device manual or check process
Data Packet Checksum Error	Data associated with a packet implies an error; could be corrupted	If error persists, call RCC
753R Power Always On	Device in Power Always On mode	If desired mode, no action required. If not desired, change power mode.

- **RSSI** - Radio Signal Strength Indicator - Shows the strength of the radio signal reception at the specific device location.
- **NotificationTime** - Time that each alert notification is sent.

Figure 5-3. Alert Report

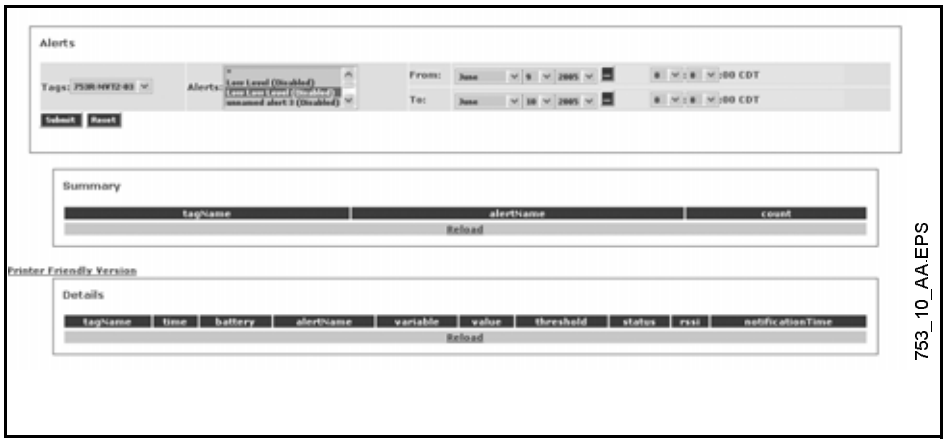

Section 6 Troubleshooting

Overview . . . . . **page 6-1**
Safety Messages . . . . . **page 6-1**
Disassembly Procedures . . . . . **page 6-3**
Reassembly Procedures . . . . . **page 6-5**

OVERVIEW

This section contains troubleshooting techniques for the most common operating problems for the Rosemount 753R wireless indicator and the iTraX® web interface.

SAFETY MESSAGES

Procedures and instructions in this section may require special precautions to ensure the safety of the personnel performing the operations. Information that raises potential safety issues is indicated by a warning symbol (⚠). Refer to the following safety messages before performing an operation preceded by this symbol.

Warnings (⚠)

⚠WARNING

Explosions can result in death or serious injury.

- Do not remove the wireless indicator covers in explosive environments when the circuit is live.
- Before connecting a communicator in an explosive atmosphere, make sure that the instruments in the loop are installed according to intrinsically safe or nonincendive field wiring practices.

⚠CAUTION

Static electricity can damage sensitive components.

- Observe safe handling precautions for static-sensitive components.

TROUBLESHOOTING

Symptom	Additional Symptoms	Recommended Action(s)
753R Not Responding	All devices are not responding	Probable server error
	All devices in one geographic area not responding	Possible cell phone network outage. Check iTraX® for cell coverage maintenance warnings.
	One unit not responding	Check/replace battery
		Check RSSI (signal strength) in iTraX®. If <8, network quality has been affected.
		Check antenna connection
		Examine all terminal connections
		Cycle power and observe LCD
		Press and hold Diagnostic Data Button for 10 seconds
		Perform master reset of 753R
Not Recieving Email Notifications		Verify email addresses entered correctly in iTraX®
		Make sure device is functioning
		Check if alert is enabled in iTraX®
Not Recieving Alerts		Verify device is working properly and updating PV data.
		Check alert configuration in iTraX®
No Discrete Output Signal		Check circuit connection
		Check discrete output configuration in iTraX®
		Verify device is functioning and updating PV data.
Push-Button Malfunction		Perform hold times according to instructions
		Take resistive measurements across button terminals
		Short circuit across button terminals
		Cycle power
LCD Not Working	Other parts of device are working properly (iTraX®)	Re-seat LCD
		Press and hold button for 4 seconds to initiate reading/transmission

DISASSEMBLY PROCEDURES

⚠ Do not remove the instrument cover in explosive atmospheres when the circuit is live.

Remove from Service

Be aware of the following:

- Follow all plant safety rules and procedures.
- Isolate and vent the process from the transmitter before removing the transmitter from service.
- Remove all electrical leads and conduit.
- Detach the process flange by removing the four flange bolts and two alignment screws that secure it.
- Do not scratch, puncture, or depress the isolating diaphragms.
- Clean isolating diaphragms with a soft rag and a mild cleaning solution, and rinse with clear water.
- Whenever you remove the process flange or flange adapters, visually inspect the Teflon o-rings. Replace the o-rings if they show any signs of damage, such as nicks or cuts. If they are not damaged, reuse them.

The 753R transmitter is attached to the process connection by four bolts and two cap screws. Remove the bolts and separate the transmitter from the process connection. Leave the process connection in place and ready for re-installation.

Remove from Service

To remove a wireless indicator from service, “Decommissioning Procedures” on page 2-8.

Remove Terminal Block

Electrical connections are located on the terminal block in the compartment labelled “FIELD TERMINALS.”

PlantWeb Housing

Loosen the two small screws located at the 10 o'clock and 4 o'clock positions, and pull the entire terminal block out.

Remove Assembly

The Standard Interface Assembly or Adjustment Interface Assembly is located in the compartment opposite the terminal side in the PlantWeb housing. To remove the assembly, perform the following procedure:

1. Remove the housing cover opposite the field terminal side.
2. Remove the LCD Display. To do this, hold in the two clips and pull outward. This will expose the two screws located on the Standard Interface Assembly.
3. Loosen the two small screws located on the assembly in the 8 o'clock and 2 o'clock positions.
4. Pull out the assembly to expose and locate the SuperModule connector.
5. Grasp the SuperModule connector and pull upwards (avoid pulling wires).

Figure 6-1. SuperModule connector view

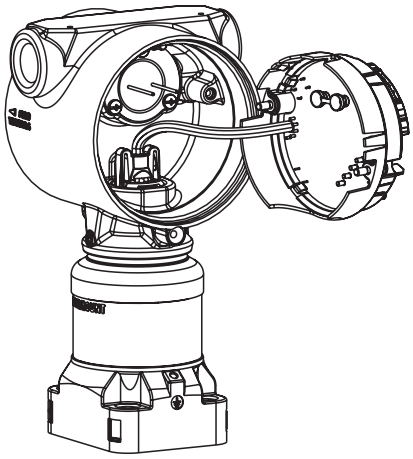

Remove the SuperModule from the Housing

IMPORTANT
To prevent damage to the SuperModule cable, disconnect it from the PlantWeb assembly or Junction Box terminal block before you remove the SuperModule from the housing.

1. Loosen the housing rotation set screw with a 3/32-inch hex wrench, then rotate back one full turn.
2. Unscrew the housing from the SuperModule.

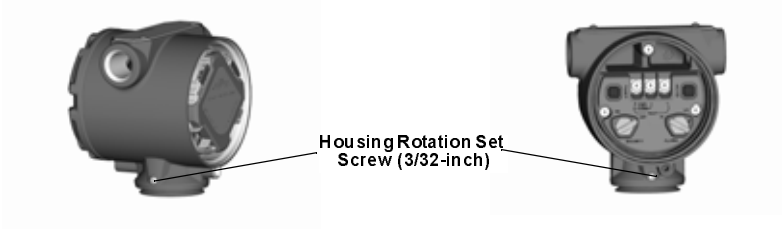

REASSEMBLY PROCEDURES

Attach the SuperModule to the Housing

IMPORTANT
The V-Seal must be installed at the bottom of the housing.

1. Apply a light coat of low temperature silicon grease to the SuperModule threads and o-ring.
2. ⚠ Thread the housing completely onto the SuperModule. The housing must be no more than one full turn from flush with the SuperModule to comply with explosion-proof requirements.
3. Tighten the housing rotation set screw using a 3/32-inch hex wrench.

Install Assembly in the PlantWeb Housing

1. Apply a light coat of low temperature silicon grease to the SuperModule connector.
2. Insert the SuperModule connector into the top of the SuperModule.
3. Gently slide the assembly into the housing, making sure the pins from the PlantWeb housing properly engage the receptacles on the assembly.
4. Tighten the captive mounting screws.
5. ⚠ Attach the PlantWeb housing cover and tighten so that metal contacts metal to meet explosion-proof requirements.

Install the Terminal Block

PlantWeb Housing

1. Gently slide the terminal block into the housing, making sure the pins from the PlantWeb housing properly engage the receptacles on the terminal block.
2. Tighten the captive screws on the terminal block.
3. ⚠ Attach the PlantWeb housing cover and tighten so that metal contacts metal to meet explosion-proof requirements.

Device ID

Locate a device I.D. for a known tag:

1. Log in to iTrax®
2. Click **Device** on the left hand side under the Configuration Menu
3. Choose the device from the **Select tag to configure** menu
   Allow iTraX® to load the device configuration options
4. Click **Measurement**
5. The device I.D. appears in the list of Measurement Configuration options

Appendix A Reference Data

Functional Specifications . . . . . **page A-1**
Physical Specifications . . . . . **page A-2**
Dimensional Drawings . . . . . **page A-2**
Ordering Information . . . . . **page A-5**

FUNCTIONAL SPECIFICATIONS

Power Supply

External Power Supply (Power Source Option S0AA)
Voltage = 6 to 24 Vdc
Power = 1.5 watts max

Remote Power Supply (Power Source Option S1AA)
Rosemount Remote Power Supply with solar panel and battery (advanced power management for up to 5 years battery life)

Temperature Limits

Ambient
-4 to 140 °F (-20 to 60 °C)

Storage
-40 to 185 °F (-40 to 85 °C)

Humidity Limits

0-100% relative humidity

Vibration

Suitable for 60-2000 Hz 2g as specified in IEC 60770-1

PHYSICAL SPECIFICATIONS

Electrical Connections
½ - 14 NPT conduit

Paint
Polyurethane

Cover O-rings
Buna-N

Shipping Weights

Table A-1. wireless indicator Weights without Options

wireless indicator Package	Add Weight In lb (kg)
753R Housing and RPS	5.7 (2.58)
753R Housing only	3.5 (1.59)
753R Housing, RPS, and Integrated Pressure wireless indicator	8.8 (3.99)
753R and Integrated Pressure Transmitter	6.6 (2.99)

DIMENSIONAL DRAWINGS

753R with Integrated Coplanar Pressuse Transmitter

Note
Dimensions are in inches (millimeters)

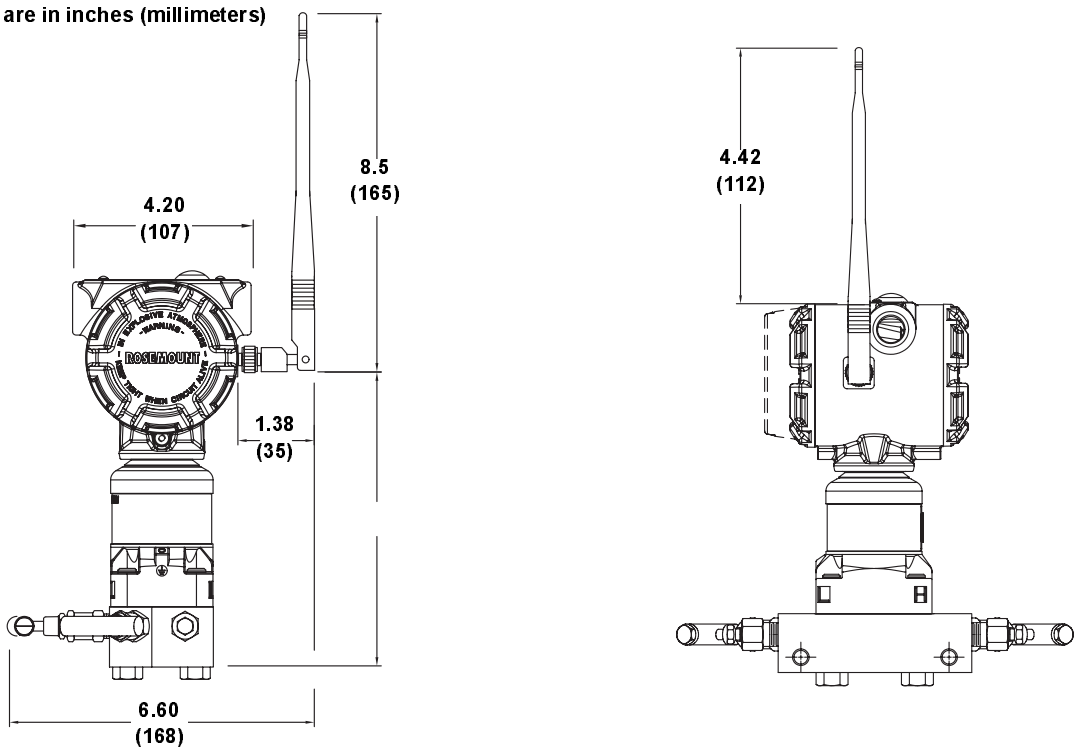

753R with Integrated Coplanar Pressure Transmitter and Remote Power Supply

Note
Dimensions are in inches (millimeters)

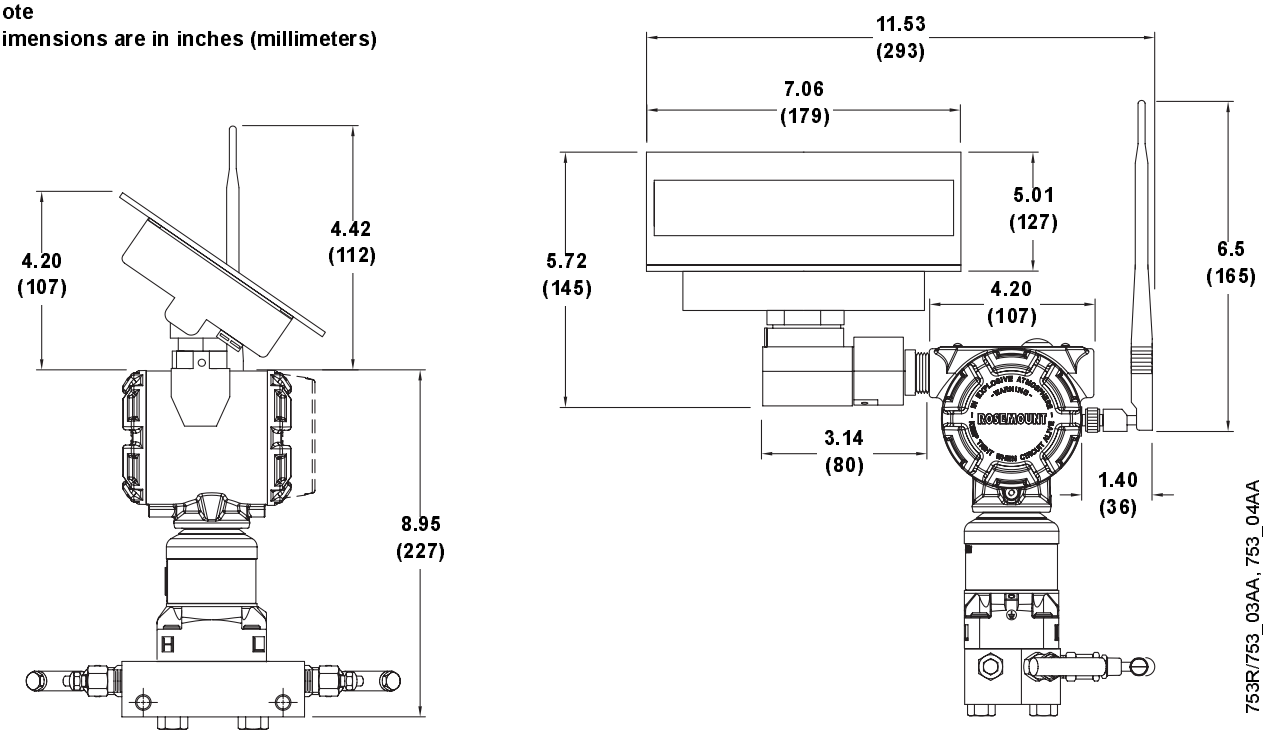

753R with a Coplanar Mounting Bracket

Note
Dimensions are in inches (millimeters)

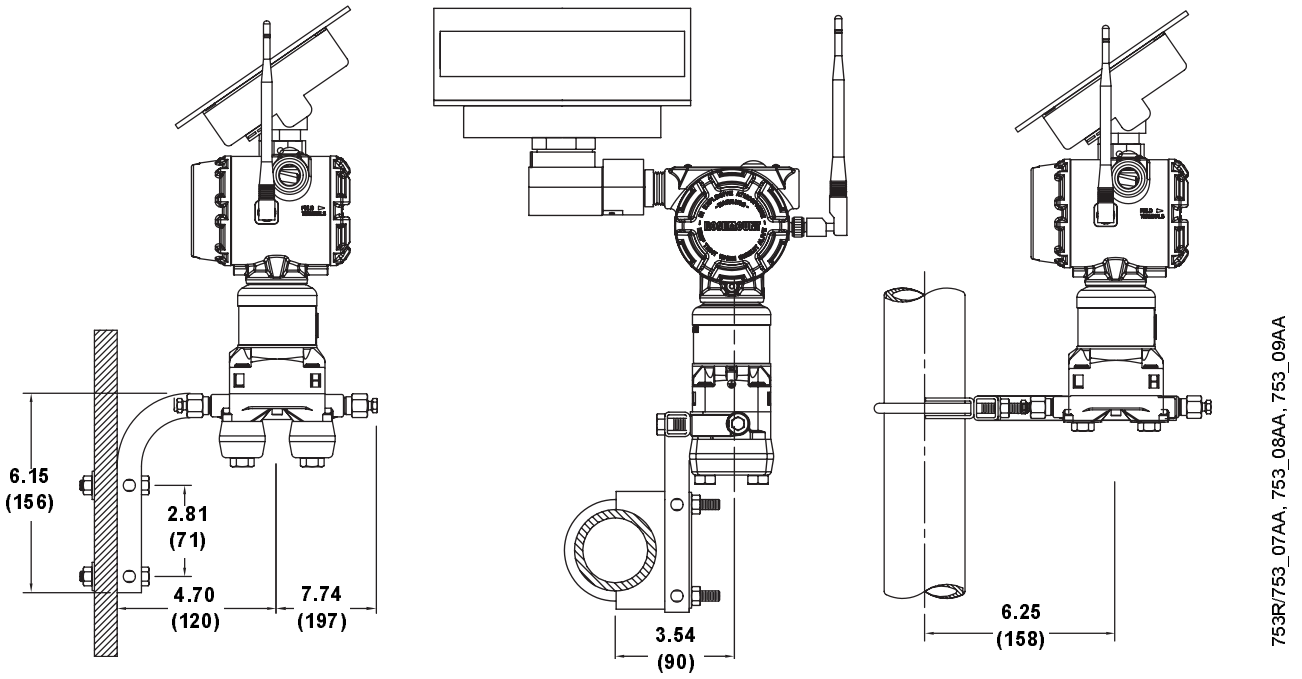

753R - Remote Power Supply

Note
Dimensions are in inches (millimeters)

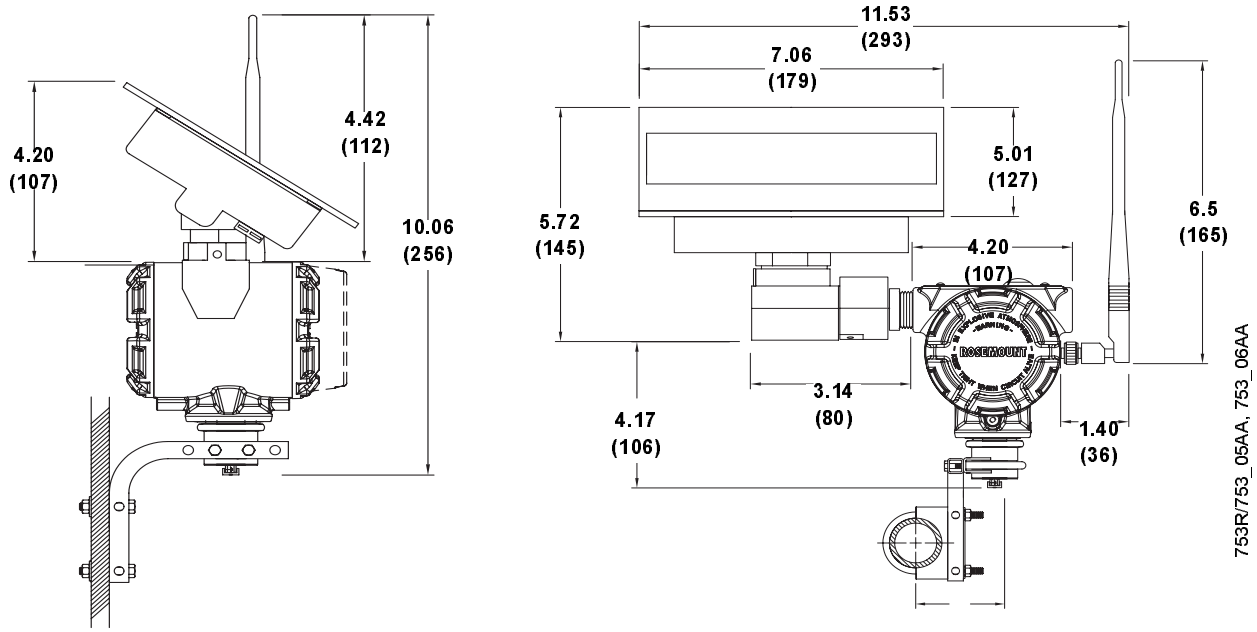

753R Remote Power Supply In-Line Mounting Configuration

Note
Dimensions are in inches (millimeters)

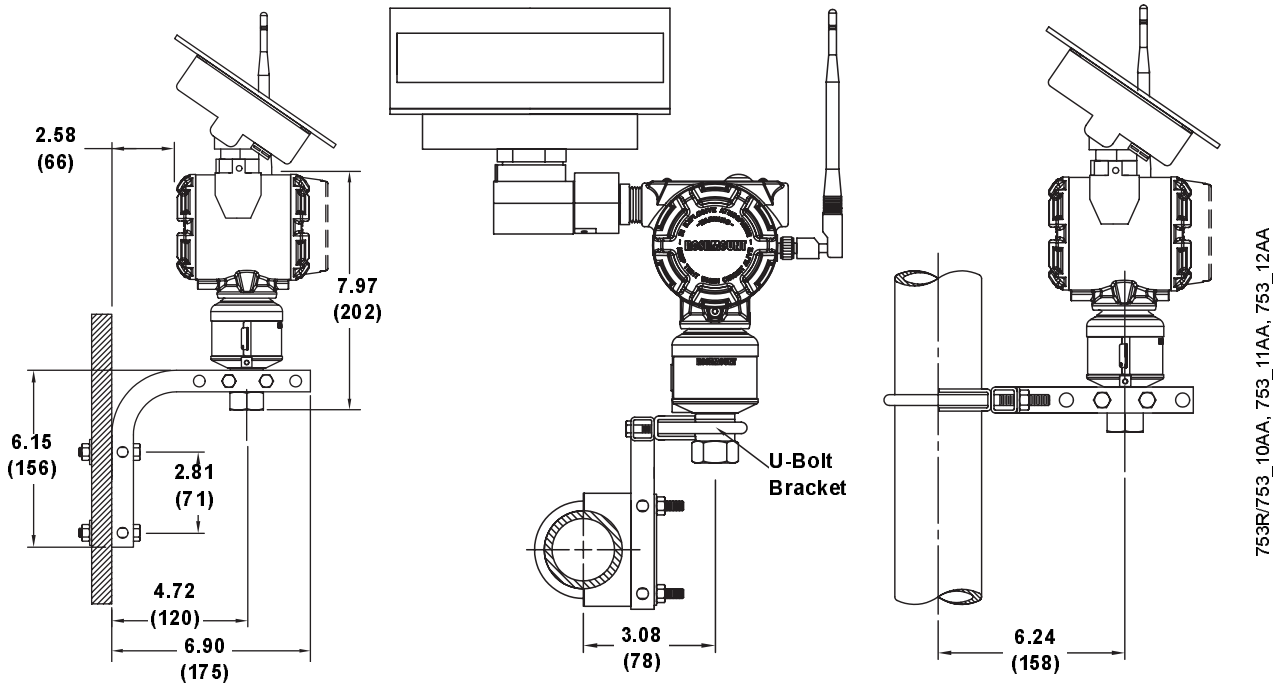

ORDERING INFORMATION

Note: All units require M5 option.

Model	Product Description		
753R	Web Based Monitoring Indicator		
Code	**Communications**		
G	GSM/GPRS Wireless To iTraX®		
Code	**Assembly Configuration**		
0	Assemble 753R to a 3051S Pressure Transmitter		
1	Remote Mounted Housing Assembly		
Code	**Measurement Point Protocol**		
H0	4-20mA/HART Transmitter Input		
Code	**Housing Style**	**Material**	**Conduit Entry Size**
1A	PlantWeb Housing	Aluminum	1/2-14 NPT
Code	**Power Source**		
S0	No Power Accessories (Local Line Power 6-24 Vdc)		
S1	Solar Panel and Battery (Size: 1.5W)		
Code	**Final Destination of Product (Communications Approval)**		
01	USA		
02	Canada		
Code	**Other Options**		
	Discrete I/O		
Y1	Discrete I/O (1 Dry Contact)		
	Meters		
M5(1)	PlantWeb LCD Display		
	Product Certifications		
N5	FM Class I, Division 2 (Non-incendive)		
Typical Model Number: 753R G 1 H0 1A S1AA 01 M5			

(1) Required on all units

ITRAX® TRANSMISSION ORDERING INFORMATION

Description	Invoice Interval	Part Number
1Transmission per day, 1 Alarm allowance per day	**Monthly**	00753-9100-0112
3 Transmissions per day, 1 Alarm allowance per day	**Monthly**	00753-9100-0312
12 Transmissions per day, 2 Alarm allowances per day	**Monthly**	00753-9100-1212
18 Transmission per day, 2 Alarm allowances per day	**Monthly**	00753-91000-1812
24 Transmissions per day, 2 Alarm allowances per day	**Monthly**	00753-9100-2412

Appendix B Product Certifications

Overview . . . . . **page B-1**
Approved Manufacturing Locations . . . . . **page B-1**
Telecommunication Compliance . . . . . **page B-1**
Ordinary Locations Certifications . . . . . **page B-1**
Hazardous Locations Certifications . . . . . **page B-1**

OVERVIEW

This section contains intrinsic safety approval and standard compliance information for the Rosemount 753R monitor.

APPROVED MANUFACTURING LOCATIONS

Rosemount Inc. — Chanhassen, Minnesota, USA

TELECOMMUNICATION COMPLIANCE

FCC ID: IHDT56DB1 is contained within.

Industry Canada ID: IC ID: 109O-DB1 is contained within.

ORDINARY LOCATIONS CERTIFICATIONS

As standard, the wireless indicator has been examined and tested to determine that the design meets basic electrical, mechanical, and fire protection requirements by FM, a nationally recognized testing laboratory (NRTL) as accredited by the Federal Occupational Safety and Health Administration (OSHA).

HAZARDOUS LOCATIONS CERTIFICATIONS

North American Certifications

Factory Mutual (FM) Approvals

N5 FM Class I, Division 2 (Non-incendive)
Certificate Number: 3023264
Nonincendive for Class I, Division 2, Groups A, B, C, and D
Temperature Class T5 Ta = 70° C
Indoor Hazardous (Classified) Locations

WARNING

Substitution of components may impair suitability for Division 2.
Explosion hazard. Do not disconnect equipment when a flammable or combustible atmosphere is present.
Explosion hazard. Do not open enclosure or replace battery when flammable or combustible atmosphere is present.

Reference Manual
00809-0100-4801, Rev AA
March 2006

Rosemount 753R Indicator

Rosemount and the Rosemount logotype are registered trademarks of Rosemount Inc.
SuperModule and Coplanar trademarks of Rosemount Inc.
PlantWeb is a mark of one of the Emerson Process Management companies.
HART is a registered trademark of the HART Communications Foundation.
FOUNDATION fieldbus is a registered trademark of the Fieldbus Foundation.
Teflon is a registered trademark of E.I. du Pont de Nemours & Co.

All other marks are the property of their respective owners.

Cover Photo: 753/753R_wobase_angle_bw.tif

Emerson Process Management

Rosemount Inc.
8200 Market Boulevard
Chanhassen, MN 55317 USA
T (U.S.) 1-800-999-9307
T (International) 952-906-8888
F (952) 949-7001

www.rosemount.com

Emerson Process Management
Shared Services Ltd.
Heath Place
Bognor Regis
West Sussex PO22 9SH
England
T 44 (1243) 863 121
F 44 (1243) 867 554

Emerson Process Management
Asia Pacific Private Ltd.
1 Pandan Crescent
Singapore 128461
Tel (65) 777-8211
Fax (65) 777-0947
Enquiries@AP.EmersonProcess.com

© 2006 Rosemount Inc. All rights reserved.

EMERSON
Process Management