Instruction Manual
106-300NFX Rev. 4.2
January 2002

World Class 3000

Oxygen Analyzer (CENELEC) with IFT 3000 Intelligent Field Transmitter (CENELEC)

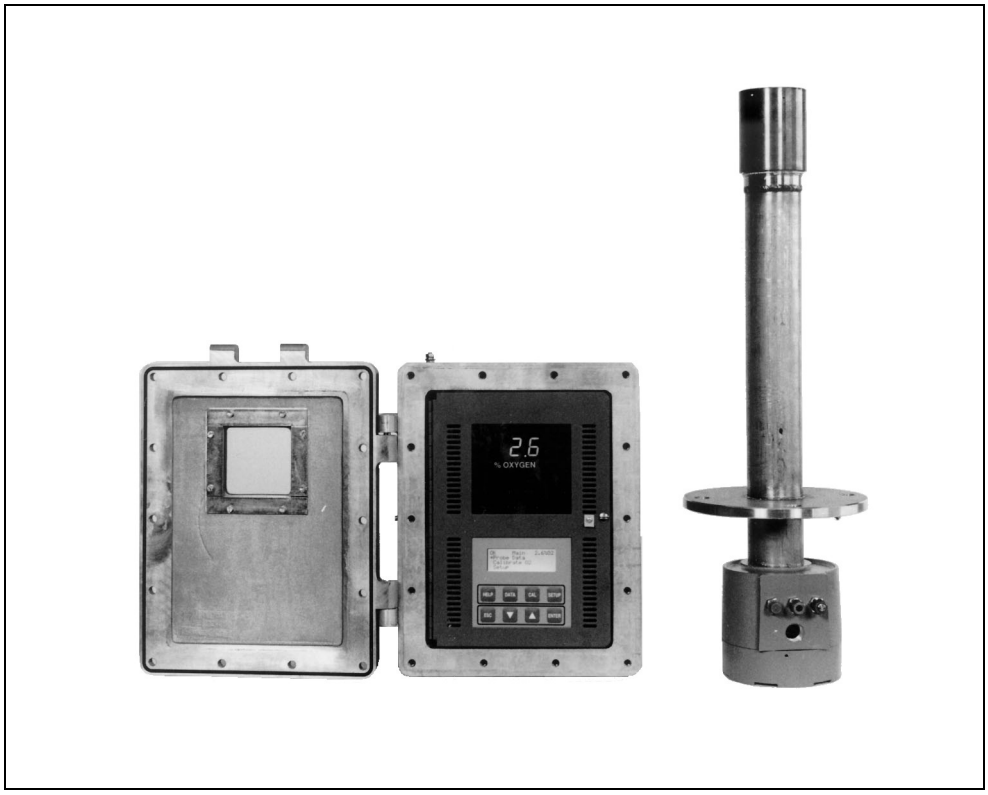

ROSEMOUNT® Analytical

http://www.processanalytic.com

EMERSON™ Process Management

ESSENTIAL INSTRUCTIONS

READ THIS PAGE BEFORE PROCEEDING!

Rosemount Analytical designs, manufactures and tests its products to meet many national and international standards. Because these instruments are sophisticated technical products, you **MUST properly install, use, and maintain them** to ensure they continue to operate within their normal specifications. The following instructions **MUST be adhered to** and integrated into your safety program when installing, using, and maintaining Rosemount Analytical products. Failure to follow the proper instructions may cause any one of the following situations to occur: Loss of life; personal injury; property damage; damage to this instrument; and warranty invalidation.

- **Read all instructions** prior to installing, operating, and servicing the product.
- If you do not understand any of the instructions, **contact your Rosemount Analytical representative** for clarification.
- **Follow all warnings, cautions, and instructions** marked on and supplied with the product.
- **Inform and educate your personnel in the proper installation, operation, and maintenance of the product**.
- **Install your equipment as specified in the Installation Instructions of the appropriate Instruction Manual and per applicable local and national codes**. Connect all products to the proper electrical and pressure sources.
- To ensure proper performance, **use qualified personnel** to install, operate, update, program, and maintain the product.
- When replacement parts are required, ensure that qualified people use replacement parts specified by Rosemount. Unauthorized parts and procedures can affect the product's performance, place the safe operation of your process at risk, **and VOID YOUR WARRANTY**. Look-alike substitutions may result in fire, electrical hazards, or improper operation.
- **Ensure that all equipment doors are closed and protective covers are in place, except when maintenance is being performed by qualified persons, to prevent electrical shock and personal injury**.

The information contained in this document is subject to change without notice.

Emerson Process Management

Rosemount Analytical Inc.
Process Analytic Division
1201 N. Main St.
Orrville, OH 44667-0901
T (330) 682-9010
F (330) 684-4434
e-mail: gas.csc@EmersonProcess.com

http://www.processanalytic.com

EMERSON
Process Management

HIGHLIGHTS OF CHANGES

Effective June, 1997 Rev. 4

Page	Summary
---	General. Added snubber version of probe to manual. Text and art changed as necessary to reflect new style of probe.

Effective February, 1998 Rev. 4.1

Page	Summary
Page 2-2	Figure 2-1. Change calibration gas tube dimensions.
Page 3-10	Add note on test gas flowmeter.

Effective January, 2002 Rev. 4.2

Page	Summary
Page 2-13	Updated Figure 2-8.
Page 2-14	Updated analog output current/voltage mode selection procedure.

HIGHLIGHTS OF CHANGES
APPENDIX AX

Effective June, 1997 Rev. 2

Page	Summary
--	General. Added snubber version of probe to manual. Text and art changed as necessary to reflect new style probe.

Effective February, 1998 Rev. 2.1

Page	Summary
Page A-12	Changed screw torque in paragraph A-3h.

HIGHLIGHTS OF CHANGES
APPENDIX BX

Effective February, 1995 Rev. 1.1

Page	Summary
B-3	Figure B-3. Updated for IB consistency.

Effective January, 1997 Rev. 1.2

Page	Summary
Page B-2	Figure B-2. Added fuse locations.
Page B-5	Insert protective cover and ground lead warning.
Page B-8	Insert protective cover and ground lead warning.
Page B-11	Table B-2. Add expanded fuse specifications to replacement parts.

HIGHLIGHTS OF CHANGES
APPENDIX DX

Effective February, 1995 Rev. 2

Page	Summary
--	General. Updated appendix with new version of MPS.

Effective January, 1997 Rev. 2.1

Page	Summary
Page D-5	Insert protective cover and ground lead warning.
Page D-7	Insert protective cover and ground lead warning. Add fuse specifications and clarify fuse replacement.
Page D-11	Add fuse specifications to replacement parts

HIGHLIGHTS OF CHANGES
APPENDIX EX

Effective February, 1995 Rev. 1.1

Page	Summary
Page E-4	Figure E-2. Updated for IB consistency.
Page E-7	Figure E-4. Updated Flowchart.

Effective May, 1995 Rev. 1.2

Page	Summary
Page E-4	Figure E-2. Added callout text “Heater Power Supply (Optional)”.

Effective January, 1997 Rev. 1.3

Page	Summary
Page E-5	Insert protective cover and ground lead warning.
Page E-9	Insert protective cover and ground lead warning.
Page E-15	Added expanded fuse specifications to replacement parts

HIGHLIGHTS OF CHANGES
APPENDIX JX

Effective January, 1997 Rev. 1.0

Page	Summary
Page J-4	Insert warning concerning protective equipment covers and safety ground leads.
Page J-11	Insert warning concerning protective equipment covers and safety ground leads.

TABLE OF CONTENTS

LIST OF ILLUSTRATIONS

LIST OF TABLES

PREFACE

The purpose of this manual is to provide information concerning the components, functions, installation and maintenance of this particular oxygen analyzer.

Some sections may describe equipment not used in your configuration. The user should become thoroughly familiar with the operation of this module before operating it. Read this instruction manual completely.

DEFINITIONS

The following definitions apply to WARNINGS, CAUTIONS, and NOTES found throughout this publication.

WARNING

Highlights an operation or maintenance procedure, practice, condition, statement, etc. If not strictly observed, could result in injury, death, or long-term health hazards of personnel.

CAUTION

Highlights an operation or maintenance procedure, practice, condition, statement, etc. If not strictly observed, could result in damage to or destruction of equipment, or loss of effectiveness.

NOTE

Highlights an essential operating procedure, condition, or statement.

⏚ : EARTH (GROUND) TERMINAL

⏚ : PROTECTIVE CONDUCTOR TERMINAL

⚠ : RISK OF ELECTRICAL SHOCK

⚠ : WARNING: REFER TO INSTRUCTION BULLETIN

NOTE TO USERS

The number in the lower right corner of each illustration in this publication is a manual illustration number. It is not a part number, and is not related to the illustration in any technical manner.

IMPORTANT

SAFETY INSTRUCTIONS FOR THE WIRING AND INSTALLATION OF THIS APPARATUS

The following safety instructions apply specifically to all EU member states. They should be strictly adhered to in order to assure compliance with the Low Voltage Directive. Non-EU states should also comply with the following unless superseded by local or National Standards.

1. Adequate earth connections should be made to all earthing points, internal and external, where provided.

2. After installation or troubleshooting, all safety covers and safety grounds must be replaced. The integrity of all earth terminals must be maintained at all times.

3. Mains supply cords should comply with the requirements of IEC227 or IEC245.

4. All wiring shall be suitable for use in an ambient temperature of greater than 75°C.

5. All cable glands used should be of such internal dimensions as to provide adequate cable anchorage.

6. To ensure safe operation of this equipment, connection to the mains supply should only be made through a circuit breaker which will disconnect all circuits carrying conductors during a fault situation. The circuit breaker may also include a mechanically operated isolating switch. If not, then another means of disconnecting the equipment from the supply must be provided and clearly marked as such. Circuit breakers or switches must comply with a recognized standard such as IEC947. All wiring must conform with any local standards.

7. Where equipment or covers are marked with the symbol to the right, hazardous voltages are likely to be present beneath. These covers should only be removed when power is removed from the equipment — and then only by trained service personnel.

8. Where equipment or covers are marked with the symbol to the right, there is a danger from hot surfaces beneath. These covers should only be removed by trained service personnel when power is removed from the equipment. Certain surfaces may remain hot to the touch.

9. Where equipment or covers are marked with the symbol to the right, refer to the Operator Manual for instructions.

10. All graphical symbols used in this product are from one or more of the following standards: EN61010-1, IEC417, and ISO3864.

SECTION 1
DESCRIPTION

1-1 COMPONENT CHECKLIST OF TYPICAL SYSTEM (PACKAGE CONTENTS)

A typical Rosemount World Class 3000 Oxygen Analyzer (CENELEC approved) with IFT 3000 Intelligent Field Transmitter (CENELEC approved) should contain the items shown in Figure 1-1. Record the Part Number, Serial Number, and Order Number for each component of your system in the table located on the cover of this manual.

WARNING

The IFT 3000, Oxygen Analyzer (Probe), and probe abrasive shield are heavy. Lifting and carrying procedures should take account of this weight.

1-2 SYSTEM OVERVIEW

a. Scope

This Instruction Bulletin has been designed to supply details needed to install, start up, operate, and maintain the Rosemount World Class 3000 Oxygen Analyzer (CENELEC approved) with IFT 3000 Intelligent Field Transmitter (CENELEC approved). The Intelligent Field Transmitter (IFT) can be interfaced with one World Class 3000 probe. The IFT provides all necessary intelligence for controlling the probe and optional MPS 3000 Multiprobe Gas Sequencer.

1. Intelligent Field Transmitter (CENELEC approved)
2. Instruction Bulletin
3. Multiprobe Test Gas Sequencer (Optional)
4. Heater Power Supply (CENELEC approved)(Optional)
5. Oxygen Analyzer (Probe) (CENELEC approved)
6. System Cable
7. Mounting Plate with Mounting Hardware and Gasket
8. Reference AIR set (optional)

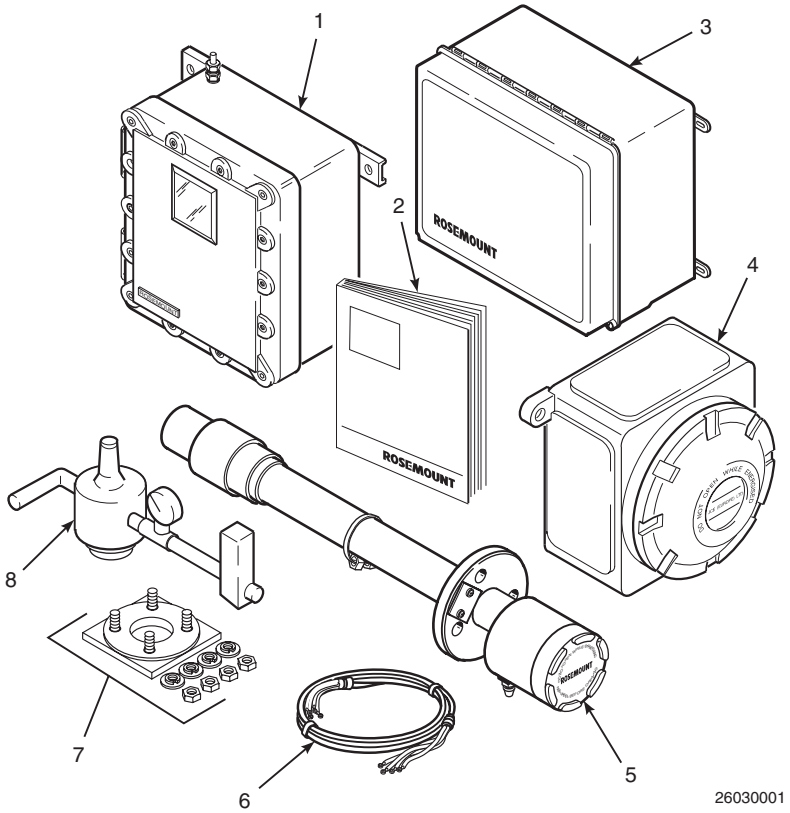

Figure 1-1. Typical System Package

WARNING

The Rosemount encode sheets (Product Ordering Matrix) allow a customer to order either the hazardous area version of the IFT 3000 or the non-hazardous area version. The hazardous area version has the symbol "EExd" on the apparatus nameplate. The non-hazardous area version does not. Ensure that if you have received the non-hazardous version that you do not install it in a potentially explosive atmosphere. This also applies to the hazardous/non-hazardous versions of the HPS 3000.

b. System Description

The Rosemount Oxygen Analyzer (Probe) is designed to measure the net concentration of oxygen in an industrial process; i.e., the oxygen remaining after all fuels have been oxidized. The probe is permanently positioned within an exhaust duct or stack and performs its task without the use of a sampling system.

The equipment measures oxygen percentage by reading the voltage developed across a heated electrochemical cell, which consists of a small Yttria-stabilized, Zirconia disc. Both sides of the disc are coated with porous metal electrodes. When operated at the proper temperature, the millivolt output voltage of the cell is given by the following Nernst equation:

$$EMF = KT \log_{10}(P_1/P_2) + C$$

Where:

1. P_2 is the partial pressure of the oxygen in the measured gas on one side of the cell,
2. P_1 is the partial pressure of the oxygen in the reference gas on the other side,
3. T is the absolute temperature,
4. C is the cell constant,
5. K is an arithmetic constant.

NOTE

For best results, use clean, dry, instrument air (20.95% oxygen) as a reference gas.

When the cell is at operating temperature, and there are unequal oxygen concentrations across the cell, oxygen ions will travel from the high partial pressure of oxygen side to the low partial pressure side of the cell. The resulting logarithmic output voltage is approximately 50 mV per decade. Because the magnitude of the output is proportional to the logarithm of the inverse of the sample of the oxygen partial pressure, the output signal increases as the oxygen concentration of the sample gas decreases. This characteristic enables the oxygen analyzer to provide exceptional sensitivity at low oxygen concentrations.

Oxygen analyzer equipment measures net oxygen concentration in the presence of all the products of combustion, including water vapor. Therefore, it may be considered an analysis on a "wet" basis. In comparison with older methods, such as the Orsat apparatus, which provides an analysis on a "dry" gas basis, the "wet" analysis will, in general, indicate a lower percentage of oxygen. The difference will be proportional to the water content of the sampled gas stream.

c. System Configuration

The equipment discussed in this manual consists of three major components: the oxygen analyzer (CENELEC approved) (probe), the intelligent field transmitter (CENELEC approved) (IFT), and an optional heater power supply (CENELEC approved) (HPS). The HPS is required when the cable run between the electronics and the probe exceeds 45 m (150 ft). There is also an optional multiprobe test gas sequencer (MPS), which can be used to facilitate the automatic calibration of a multiple probe configuration.

CENELEC approved probes are available in three length options, giving the user the flexibility to use an in situ penetration appropriate to the size of the stack or duct. The options on length are 457 mm (18 in.), 0.91 m (3 ft), and 1.83 m (6 ft). The probe is certified EExd IIB T1 [370°C (698°F)] to CENELEC standards EN50014 and EN50018.

The IFT contains electronics that control probe temperature (in conjunction with the optional HPS) and supply power, and provide isolated outputs that are proportional to the measured oxygen concentration. The oxygen sensing cell is maintained at a constant temperature by modulating the duty cycle of the probe heater. The IFT accepts millivolt signals generated by the sensing cell and produces outputs to be used by remotely connected devices. The IFT output is isolated and selectable to provide linearized voltage or current.

The heater power supply CENELEC approved (HPS) can provide an interface between the IFT and the probe. The HPS contains a transformer for supplying proper voltage to the probe heater. The unit is certified EExd IIC T6 to CENELEC standards EN50014 and EN50018.

Systems with multiprobe and multiple IFT applications may employ an optional MPS 3000 Multiprobe Test Gas Sequencer. The MPS 3000 provides automatic test gas sequencing for up to four probes and IFTs to accommodate automatic calibration. The MPS 3000 must be installed in a non-hazardous, explosive-free environment.

d. System Features

1. Unique and patented electronic cell protection action that automatically protects sensor cell when the analyzer detects reducing atmospheres.

2. Output voltage and sensitivity increase as the oxygen concentration decreases.

3. User friendly, menu driven operator interface with context-sensitive on-line help.

4. Field replaceable cell.

5. Analyzer constructed of rugged 316 LSS for all wetted parts.

6. The intelligent field transmitter (IFT) can be located up to 45 m (150 ft) from the probe when used without optional heater power supply (HPS). When the system includes the optional HPS, the HPS can be located up to 45 m (150 ft) from the probe and the IFT may be located up to 364 m (1200 ft) from the HPS.

7. All electronic modules are adaptable to 120, 220, and 240 line voltages.

8. Five languages may be selected for use with the IFT. These are:

   English
   French
   German
   Italian
   Spanish

9. An operator can set up, calibrate, or troubleshoot the IFT in one of two ways:

   (a) Optional General User Interface (GUI). The GUI is housed within the IFT electronics enclosure and makes use of an LCD display and keypad.

   (b) Optional LED Display Panel (LDP). The LED display and a limited function keypad permit calibration only.

e. Handling the Oxygen Analyzer

CAUTION

It is important that printed circuit boards and integrated circuits are handled only when adequate antistatic precautions have been taken to prevent possible equipment damage.

The oxygen analyzer is designed for industrial application. Treat each component of the system with care to avoid physical damage. The probe contains components made from ceramics, which are susceptible to shock when mishandled. See Safety Data Sheets 1M03243, 1M03226, and 1M03296 for safety related information.

NOTE

Retain packaging in which the oxygen analyzer arrived from the factory in case any components are to be shipped to another site. This packaging has been designed to protect the product.

f. System Considerations

Prior to installation of your Rosemount CENELEC approved World Class 3000 Oxygen Analyzer with Intelligent Field Transmitter make sure that you have all of the components necessary to make the system installation. Ensure that all the components are properly integrated to make the system functional.

Once you have verified that you have all the components, select mounting locations and determine how each component will be placed in terms of available power supply, ambient temperatures, environmental considerations, convenience, and serviceability. A typical system installation is illustrated in Figure 1-2. Figure 1-3 shows a typical system wiring. For details on installing the individual components of the system, refer to Section 2, Installation.

After selecting the probe mounting location, provision should be made for a platform where the probe can be easily serviced. The intelligent field transmitter (IFT) can be located up to 45 m (150 ft) cabling distance from the probe when used without optional heater power supply (HPS). When the system includes the optional HPS, the HPS can be located up to 45 m (150 ft) cabling distance from the probe and the IFT may be located up to 364 m (1200 ft) cabling distance from the HPS.

A source of instrument air is required at the probe for reference gas use. Since the probe is equipped with an in-place calibration feature, provision should be made for connecting test gas tanks to the oxygen analyzer when the probe is to be calibrated.

If the test gas bottles will be permanently hooked up, a check valve must be connected to the calibration gas fitting on the probe junction box. This is to prevent breathing of calibration gas line and subsequent gas condensation and corrosion. The check valve is in addition to the stop valve in the test gas kit or the solenoid valve in the multiprobe test gas sequencer units.

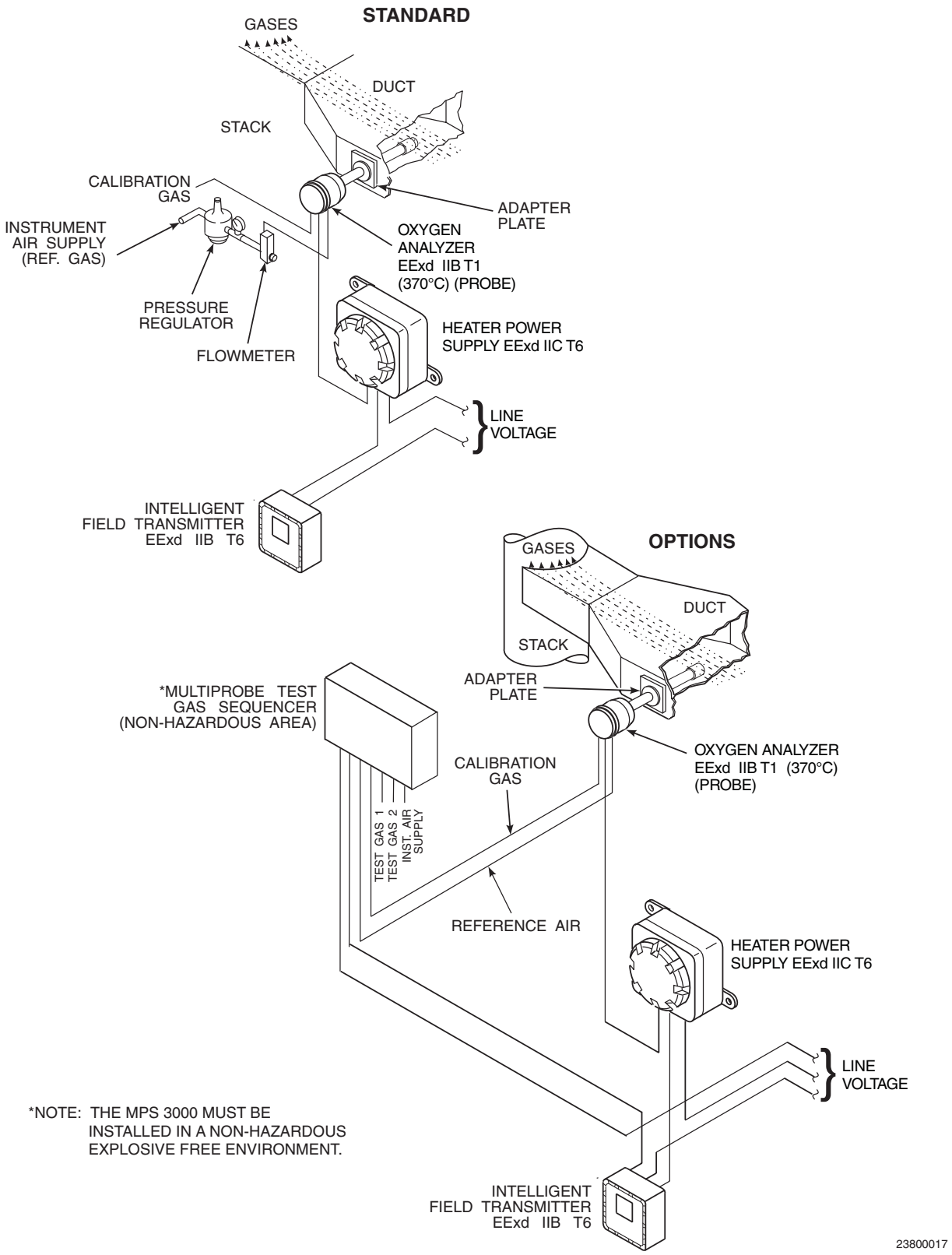

Figure 1-2. Typical System Installation

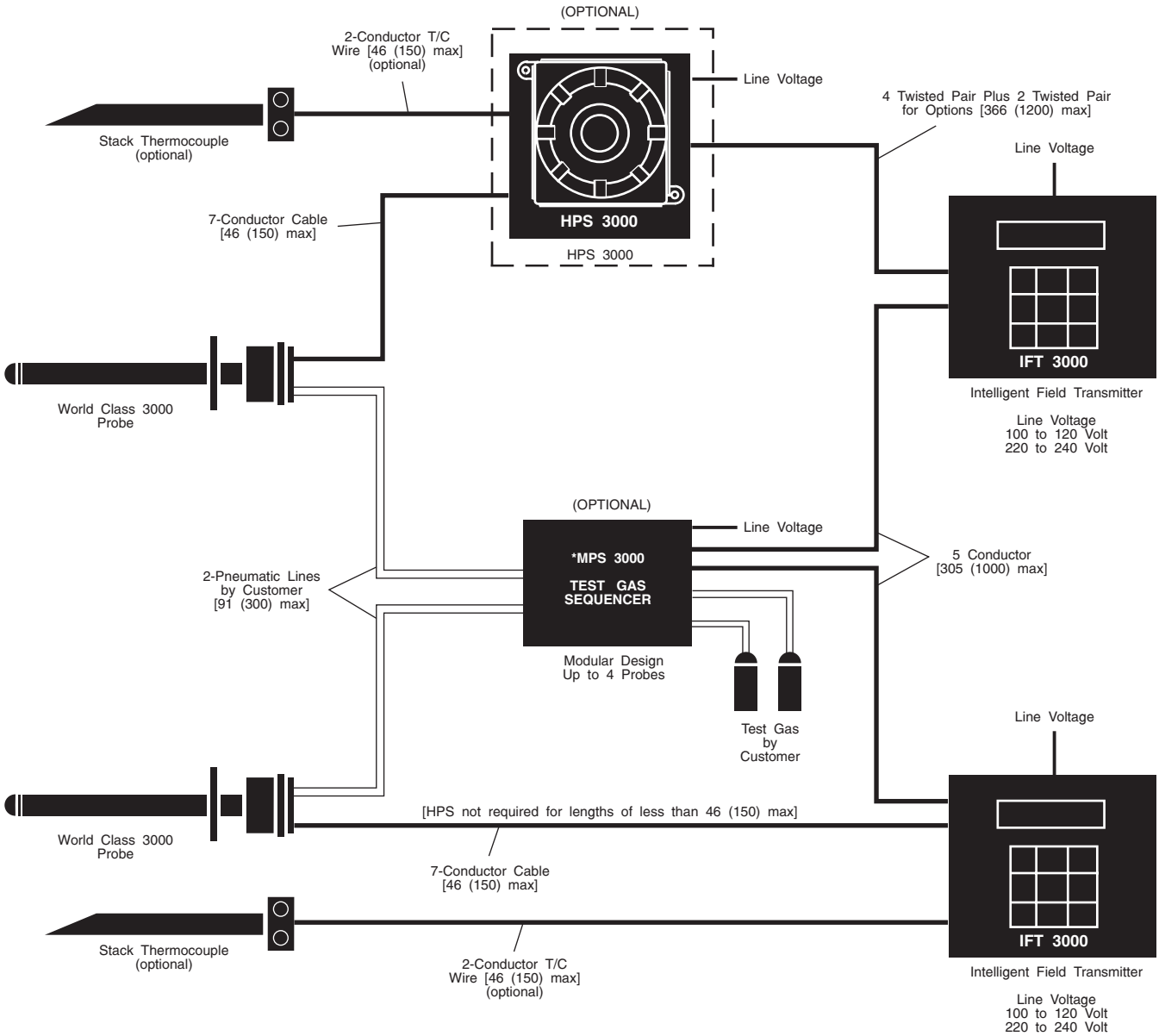

*NOTE 1: THE MPS 3000 MUST BE INSTALLED IN A NON-HAZARDOUS EXPLOSIVE FREE ENVIRONMENT.

NOTE 2: ALL DIMENSIONS APPEAR IN METERS WITH FEET IN PARENTHESES.

P00003

Figure 1-3. World Class 3000 Typical Application with Intelligent Field Transmitters - CENELEC Approved

SECTION 2
INSTALLATION

2-1 OXYGEN ANALYZER (PROBE) INSTALLATION

WARNING

Before probe installations, consult probe Safety Data Sheet 1M03226.

WARNING

The probe and probe abrasive shield are heavy. Use proper lifting and carrying procedures to avoid personnel injury.

WARNING

Install all protective equipment covers and safety ground leads after installation. Failure to install covers and ground leads could result in serious injury or death.

a. Selecting Location

1. The location of the probe in the stack or flue is most important for maximum accuracy in the oxygen analyzing process. The probe must be positioned so that the gas it measures is representative of the process. Best results are normally obtained if the probe is positioned near the center of the duct (40 to 60% insertion). A point too near the edge or wall of the duct may not provide a representative sample because of the possibility of gas stratification. In addition, the sensing point should be selected so that the process gas temperature falls within a range of 10° to 704°C (50° to 1300°F). Figure 2-1 provides you with mechanical installation references.

2. Check the flue or stack for holes and air leakage. The presence of this condition will substantially affect the accuracy of the oxygen reading. Therefore, either make necessary repairs or install the probe upstream of any leakage.

3. Ensure that the area is clear of obstructions internal and external that will interfere with installation. Allow adequate clearance for removal of probe (Figure 2-1).

CAUTION

Do not allow the temperature of the probe junction box to exceed 150°C (302°F) or damage to the unit may result. If the probe junction box temperature exceeds 150°C (302°F), the user must fabricate a heat shield or provide adequate cooling air to the probe junction box.

b. Mechanical Installation

1. Ensure that all components are available for installation of the probe. Check the ceramic filter to ensure that it is not damaged and that the system cable is the required length.

2. The probe may be installed intact as it is received. It is recommended that you disassemble the adapter plate for each installation.

3. Weld or bolt adapter plate (Figure 2-1) onto the duct.

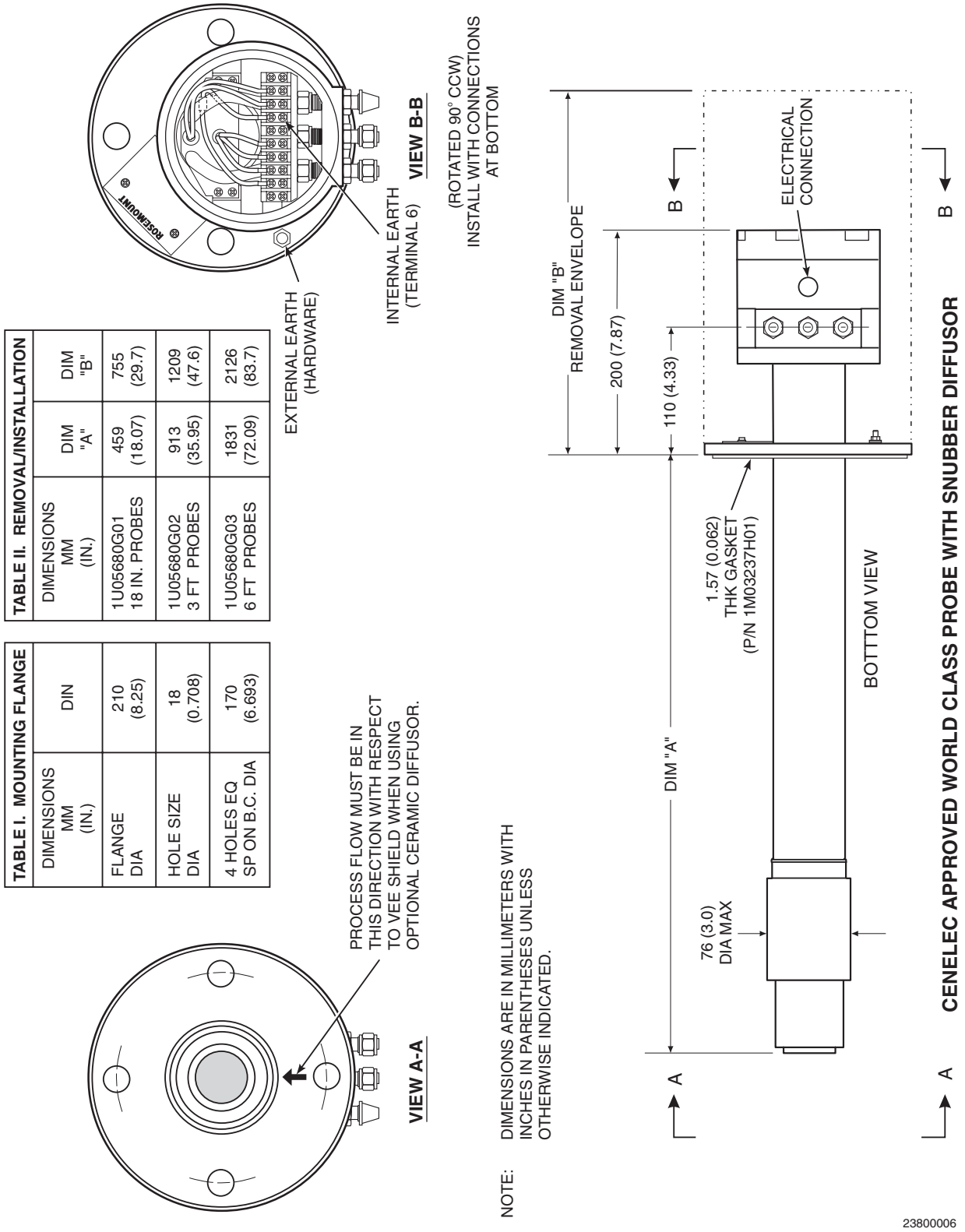

Figure 2-1. Probe Installation (Sheet 1 of 5)

NOTE: DIMENSIONS ARE IN MILLIMETERS WITH INCHES IN PARENTHESES UNLESS OTHERWISE INDICATED.

REMOVAL/INSTALLATION		
DIMENSIONS MM (IN.)	DIM "C"	DIM "D" (REMOVAL ENVELOPE)
18 IN. PROBE 1U05680G04 SHIELD 1N04966H01	387 (15.3)	769 (30.3)
3 FT PROBE 1U05680G05 SHIELD 1N04966H02	843 (33.2)	1224 (48.2)
6 FT PROBE 1U05680G06 SHIELD 1N04966H03	1762 (69.4)	2144 (84.4)

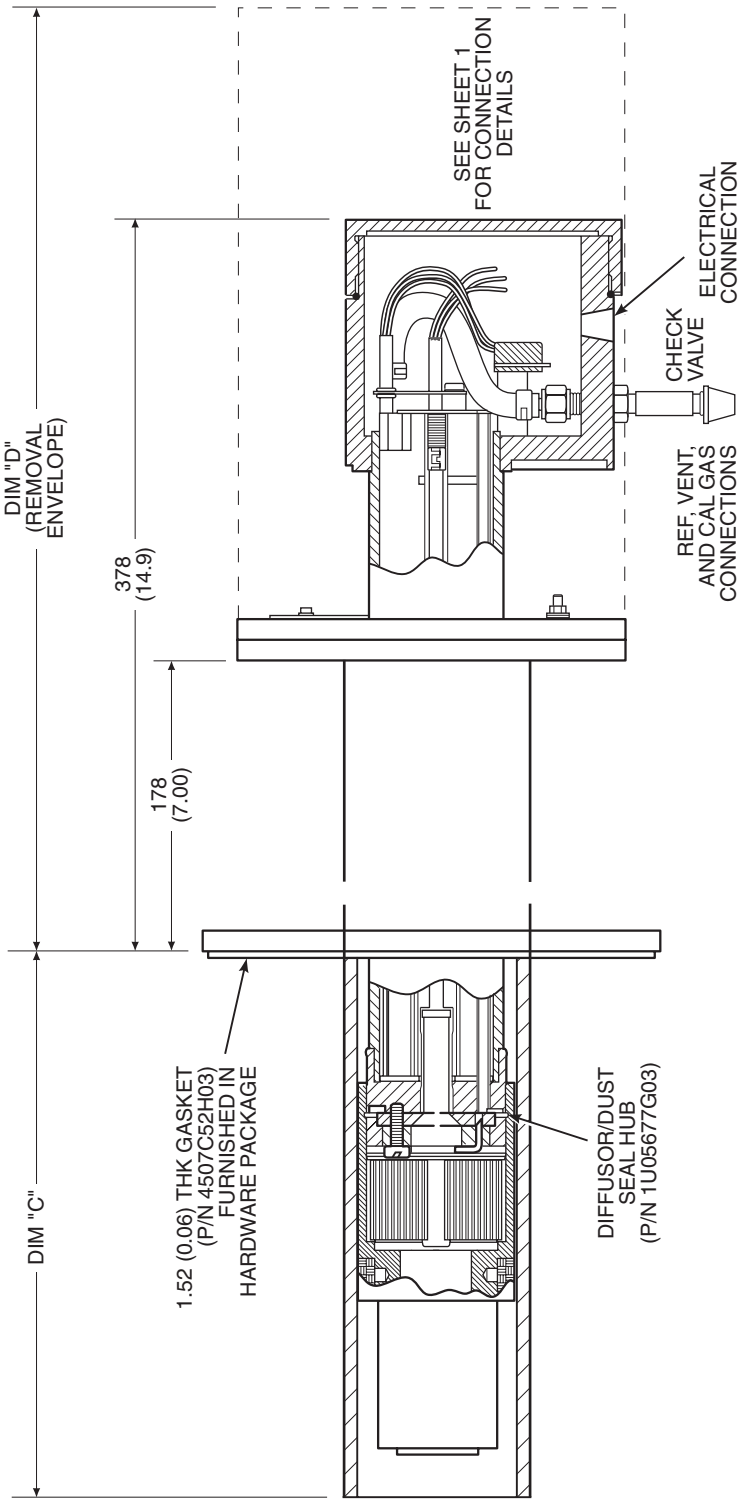

ABRASIVE SHIELD INSTALLATION WITH CENELEC APPROVED WORLD CLASS 3000

Figure 2-1. Probe Installation (Sheet 2 of 5)

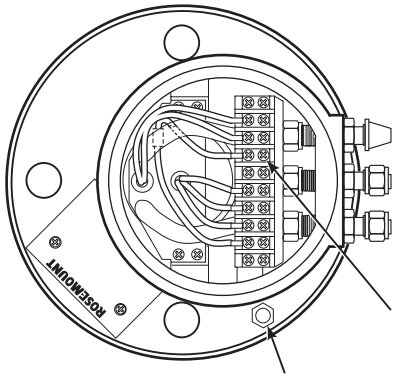

TABLE II. REMOVAL/INSTALLATION		
DIMENSIONS MM (IN.)	DIM "A"	DIM "B"
1U05680G01 18 IN. PROBES	554 (21.81)	755 (29.7)
1U05680G02 3 FT PROBES	1008 (39.68)	1209 (47.6)
1U05680G03 6 FT PROBES	1926 (75.83)	2126 (83.7)

TABLE I. MOUNTING FLANGE	
DIMENSIONS MM (IN.)	DIN
FLANGE DIA	210 (8.25)
HOLE SIZE DIA	18 (0.708)
4 HOLES EQ SP ON B.C. DIA	170 (6.693)

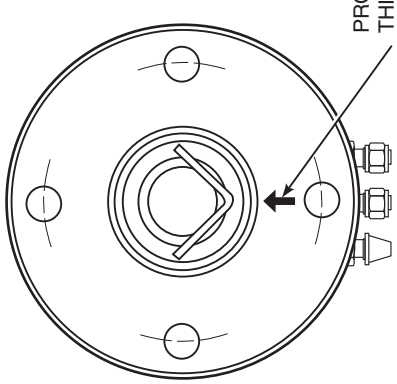

NOTE: DIMENSIONS ARE IN MILLIMETERS WITH INCHES IN PARENTHESES UNLESS OTHERWISE INDICATED.

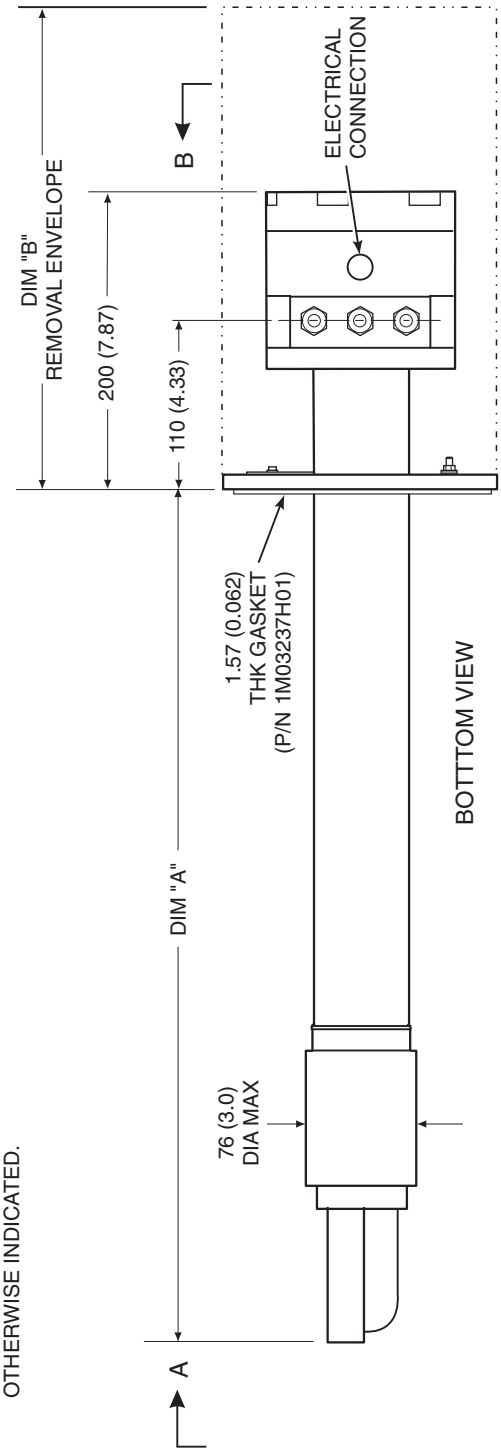

23800011

Figure 2-1. Probe Installation (Sheet 3 of 5)

MOUNTING PLATE OUTLINE

TABLE III. MOUNTING PLATE: ABRASIVE SHIELD TO STACK (NEW INSTALLATIONS)

DIMENSIONS MM (IN.)	DIN
"A"	235 (9.25)
"B" DIA	100 (3.94)
"C" THREAD	M-20 x 2.5

TABLE IV. MOUNTING PLATE: PROBE TO STACK (NEW INSTALLATIONS)

DIMENSIONS MM (IN.)	DIN
"A"	215 (8.5)
"B" THREAD	M-16 x 2
"C" DIA	170 (6.7)

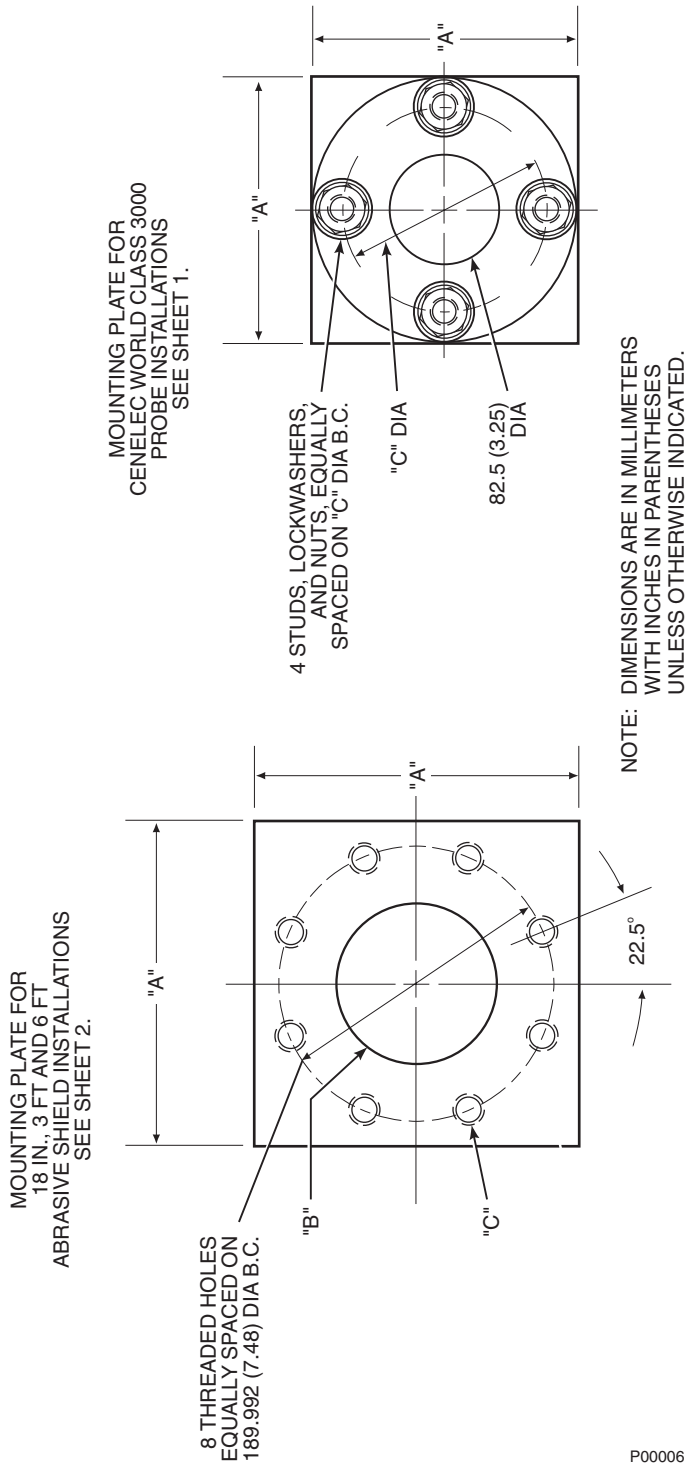

Figure 2-1. Probe Installation (Sheet 4 of 5)

INSTALLATION FOR METAL WALL STACK OR DUCT CONSTRUCTION

INSTALLATION FOR MASONRY WALL STACK CONSTRUCTION

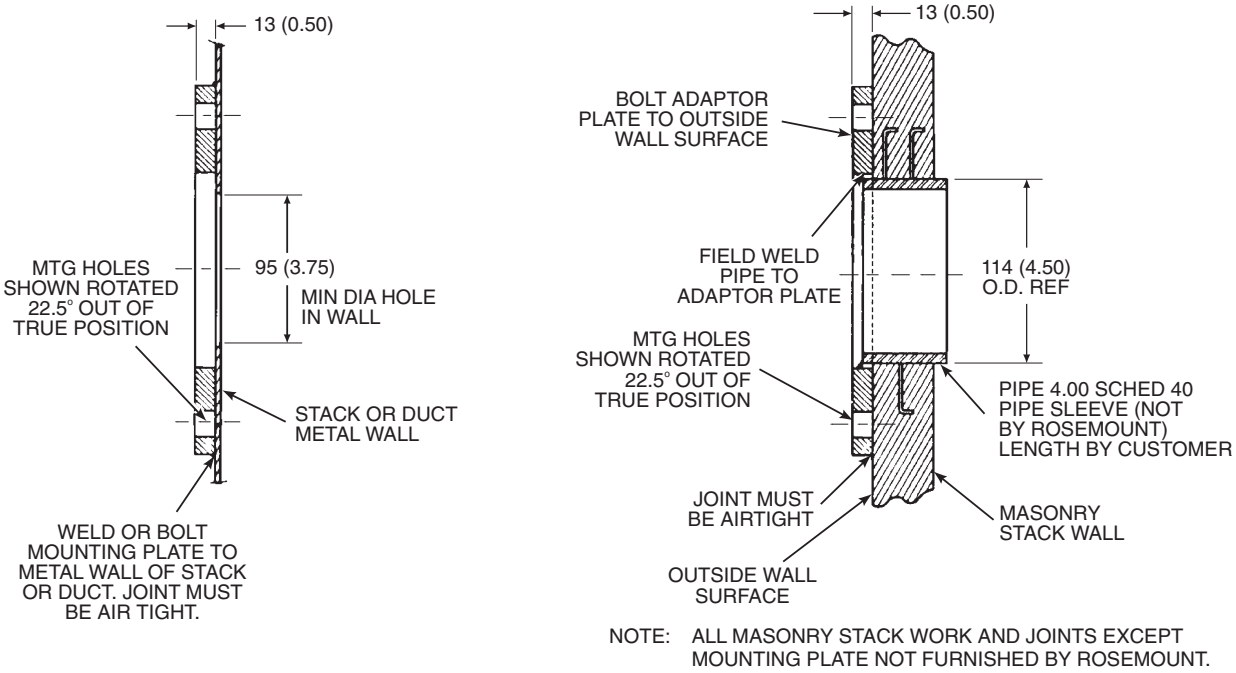

ABRASIVE SHIELD MOUNTING

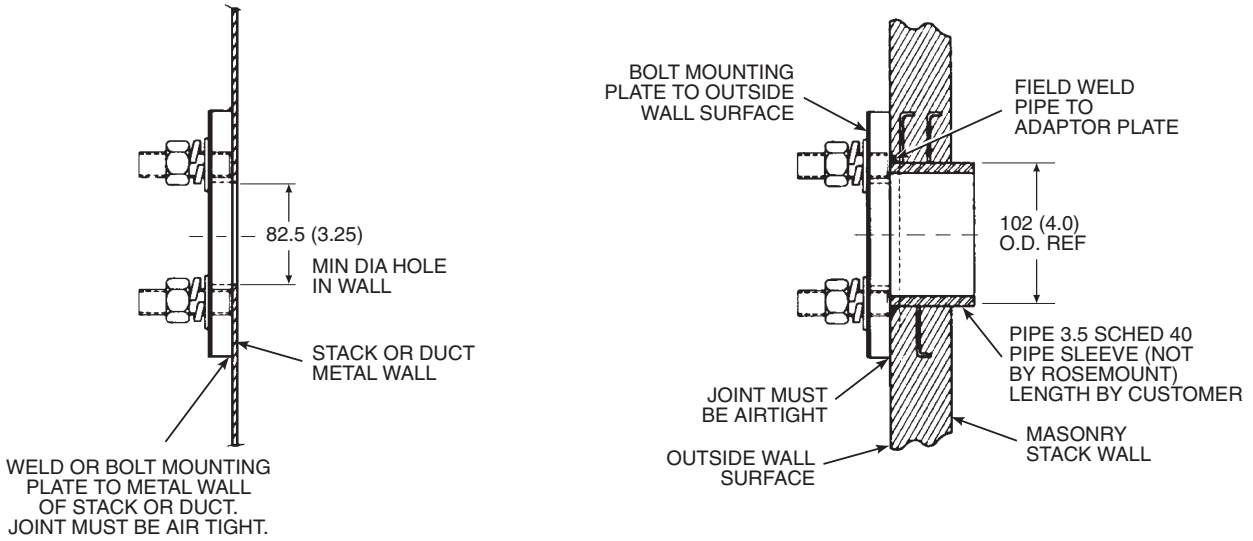

PROBE MOUNTING

P00007

Figure 2-1. Probe Installation (Sheet 5 of 5)

4. If using the optional ceramic diffuser element, the vee deflector must be correctly oriented. Before inserting the probe, check the direction of flow of the gas in the duct. Orient the vee deflector on the probe so that the apex points upstream toward the flow (Figure 2-2). This may be done by loosening the setscrews, and rotating the vee deflector to the desired position. Retighten the setscrews.

5. In horizontal installations, the probe cover should be oriented so that the system cable drops vertically from the probe cover. In a vertical installation, the system cable can be oriented in any direction.

6. If the system has an abrasive shield, check the diffusion element dust seal packings. The joints in the two packings must be staggered 180°. Also, make sure that the packings are in the hub grooves as the probe slides into the 15° forcing cone in the abrasive shield.

NOTE

If process temperatures will exceed 1000°F (538°C), use anti-seize compound on stud threads to ease future removal of probe.

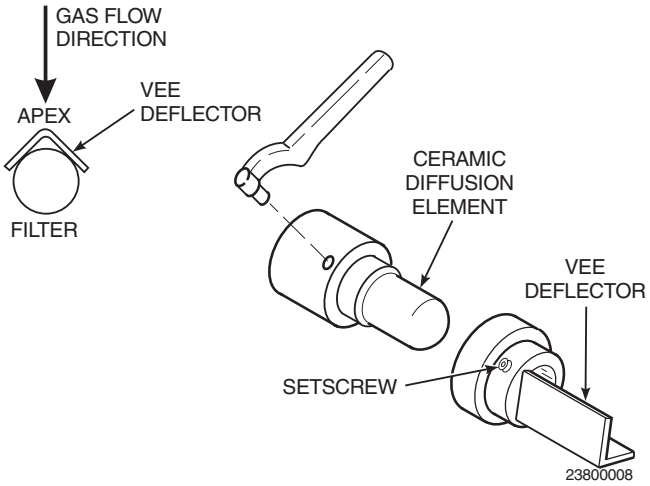

Figure 2-2. Orienting the Optional Vee Deflector

7. Insert the probe through the opening in the mounting flange and bolt the unit to the flange.

8. Ensure that probe is properly earthed by way of both the internal and external points.

9. Ensure that the installation does not obscure the messages on either the probe nameplate or the junction box lid.

c. Reference Air Package

After the oxygen analyzing (probe) unit is installed, connect the reference gas air set to the probe cover. The reference gas air set should be installed in accordance with Figure 2-3.

d. Service Required.

1. Power input: 44 VAC from HPS 3000 or IFT 3000.

2. Compressed air: 68.95 kPa (10 psig) minimum, 1551.38 kPa (225 psig) maximum at 56.6 L/hr (2 scfh) maximum; supplied by one of the following (less than 40 parts-per-million total hydrocarbons).

   (a) Instrument air - clean, dry.

   (b) Bottled standard air with step-down regulator.

   (c) Bottled compressed gas mixture (20.95% oxygen in nitrogen).

   (d) Other equivalent clean, dry, oil-free air supply.

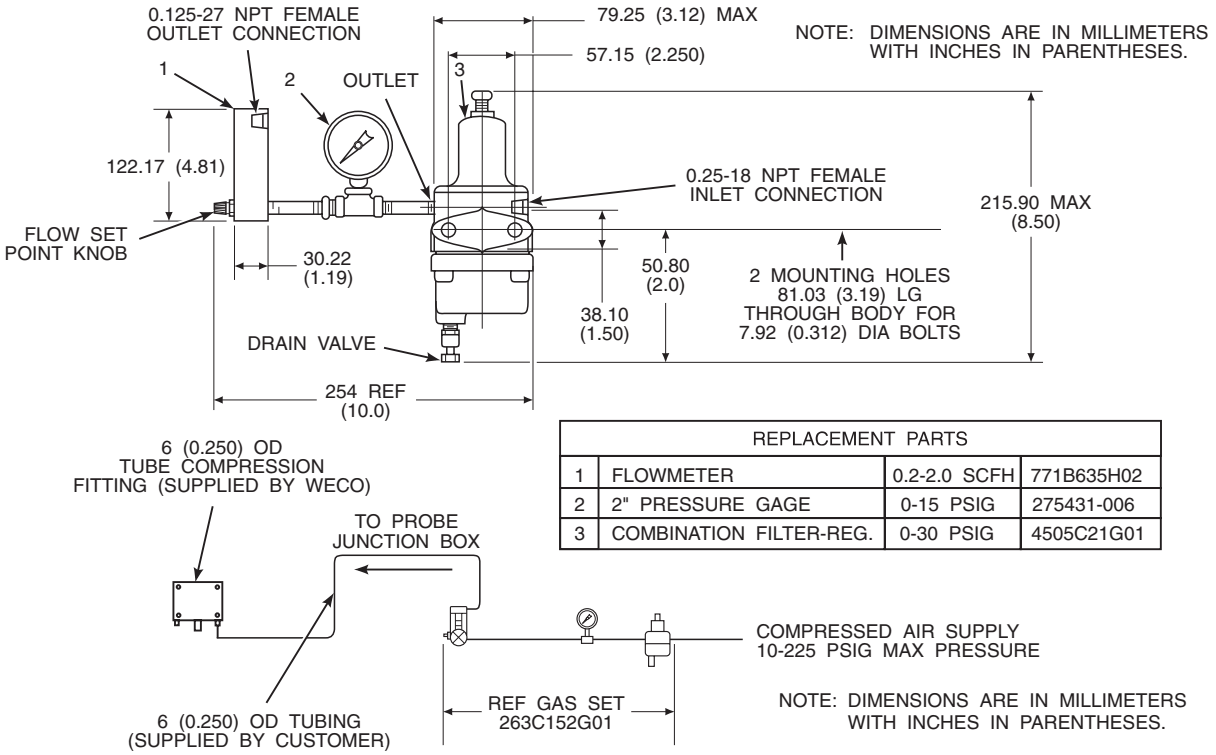

REPLACEMENT PARTS			
1	FLOWMETER	0.2-2.0 SCFH	771B635H02
2	2" PRESSURE GAGE	0-15 PSIG	275431-006
3	COMBINATION FILTER-REG.	0-30 PSIG	4505C21G01

Figure 2-3. Air set, Plant Air Connection

2-2 INTELLIGENT FIELD TRANSMITTER (IFT) INSTALLATION

WARNING

The Rosemount Encode Sheet (Product Ordering Matrix) allows a customer to order either the hazardous area version of the IFT 3000 or the non-hazardous area version. The hazardous area version has the symbol "EExd" on the apparatus nameplate. The non-hazardous area version does not. Ensure that if you have the non-hazardous area version that you do not install it in a potentially explosive environment. This warning applies equally to the hazardous area and non-hazardous area versions of the HPS 3000.

WARNING

Before IFT 3000 Installation, consult Safety Data Sheet 1M03296.

WARNING

The IFT 3000 is heavy. Lifting and carrying procedures should take account of this weight.

a. Mechanical Installation

The outline drawing of the IFT module (CENELEC approved) in Figure 2-4 shows mounting centers and clearances. The enclosure is designed to be mounted on a wall. The IFT should be installed no more than 364 m (1200 ft) from the optional HPS or 45 m (150 ft) from the probe if HPS is not installed in the system. Ambient temperature must be between 0°C and 50°C (32°F and 122°F).

NOTE

Fuse specifications are included in Figure 2-4.

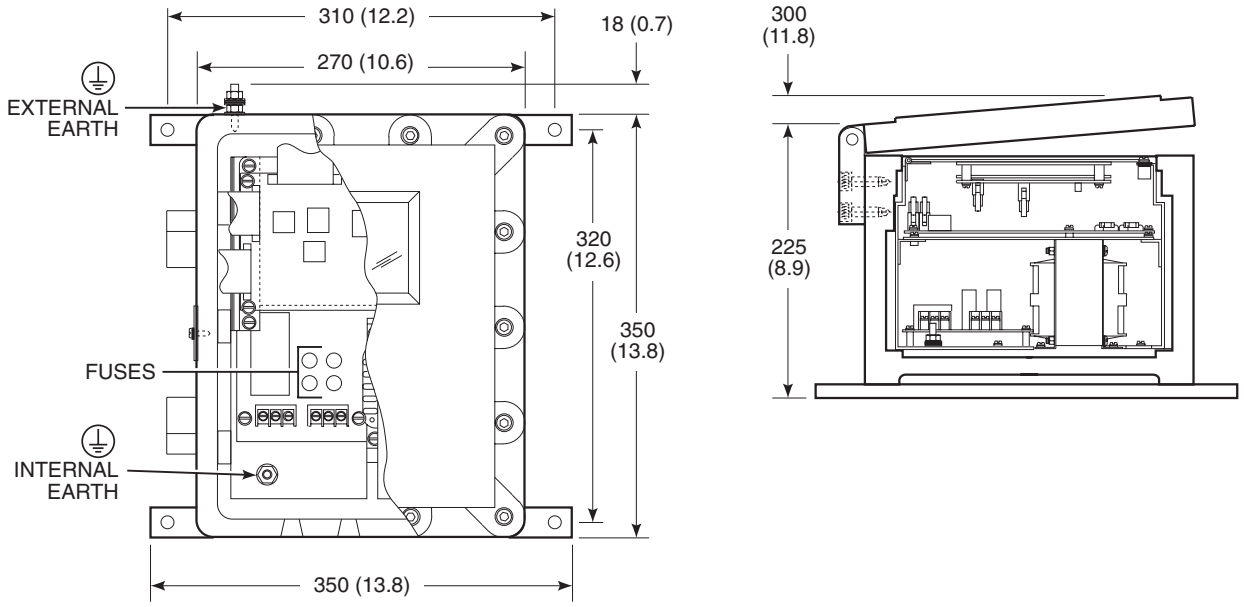

NOTES: ALL DIMENSIONS ARE IN MILLIMETERS WITH INCHES IN PARENTHESES UNLESS OTHERWISE INDICATED.

FUSES SHOWN (F3 THROUGH F6) ARE 5 AMP, ANTI-SURGE, TYPE T TO IEC127 (ROSEMOUNT PART NUMBER 1L01293H02). IF INTERNAL HEATER IS INSTALLED, TWO ADDITIONAL 5 AMP FUSES (F1 AND F2) ARE USED.

35870001

Figure 2-4. Outline of Intelligent Field Transmitter

JUMPER CONFIGURATION

ALWAYS DISCONNECT LINE VOLTAGE FROM INTELLIGENT FIELD TRANSMITTER BEFORE CHANGING JUMPERS.

LINE VOLTAGE SELECTION	JUMPER (INSTALL)
120 V.A.C.	JM8, JM7, JM1
220 V.A.C.	JM6, JM5, JM2
240 V.A.C.	JM6, JM5, JM1

PROBE HEATER VOLTAGE SELECTION	JUMPER (INSTALL)
WORLD CLASS PROBE (44V)	JM10

P00010

CAUTION

If you reconfigure the equipment for a line voltage other than the one marked on the serial label and the mains filter of the power supply then you should change the marking on the serial label and the mains filter to state the new line voltage.

CAUTION

If incorrect heater voltage is selected, damage to the probe may occur. For HPS voltage selection jumper, refer to Figure 2-15.

Figure 2-5. Power Supply Board Jumper Configuration

b. Electrical Connections

1. The IFT can be configured for 100, 120, 220, or 240 line voltages. For 120 Vac usage, install JM8, JM7, and JM1. For 220 Vac usage, install jumpers JM6, JM5, JM2 (refer to Figure 2-5 and Figure 2-6).

CAUTION

If you reconfigure the equipment for a line voltage other than the one marked on the serial label and the mains filter of the power supply you should change the marking on the serial label and the mains filter to state the new line voltage.

2. The IFT can be configured to connect directly to a probe or to an optional HPS. The electrical connections for a non-HPS equipped system should be made as described in the electrical installation diagram, Figure 2-7.

CAUTION

Do not install jumper JM6 on the microprocessor board, or JM1 on the interconnect board, if an HPS is installed in the system. This will result in system failure.

3. The IFT must have JM6 on the microprocessor board (Figure 2-8 and Figure 2-9) and JM1 on the interconnect board (Figure 2-10 and Figure 2-11) installed if an HPS is not installed in the system.

4. If an MPS is not used in the system, wire jumper between CAL RET and NO GAS must be installed on the interconnect board. Remove wire jumper if MPS is installed in the system. Refer to Figure 2-7, note 6.

5. The power cable should comply with the safety regulations in the user's country and should not be smaller than 16 gauge, 3 amp.

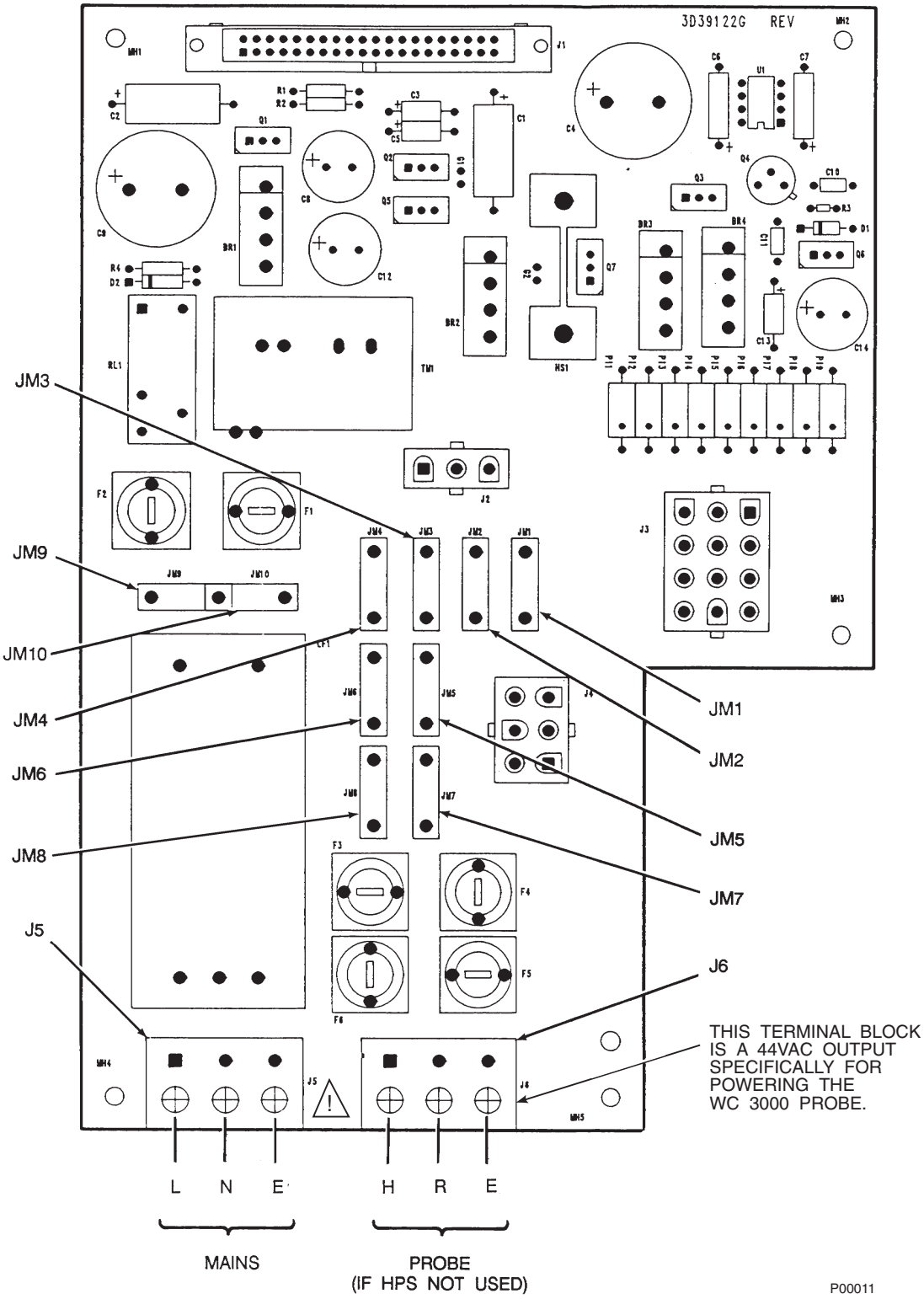

Figure 2-6. IFT Power Supply Board Jumpers

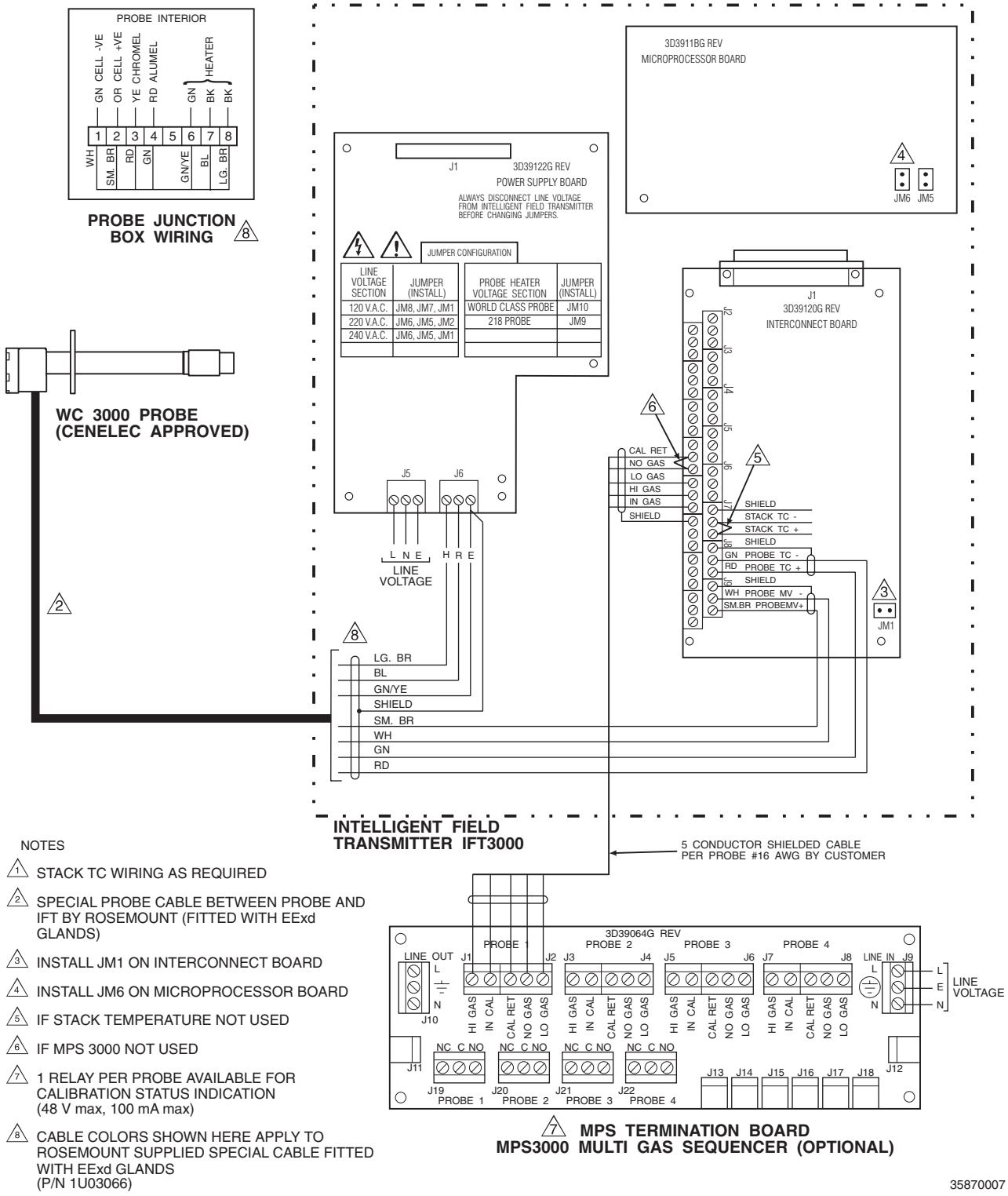

NOTES

1. STACK TC WIRING AS REQUIRED
2. SPECIAL PROBE CABLE BETWEEN PROBE AND IFT BY ROSEMOUNT (FITTED WITH EExd GLANDS)
3. INSTALL JM1 ON INTERCONNECT BOARD
4. INSTALL JM6 ON MICROPROCESSOR BOARD
5. IF STACK TEMPERATURE NOT USED
6. IF MPS 3000 NOT USED
7. 1 RELAY PER PROBE AVAILABLE FOR CALIBRATION STATUS INDICATION (48 V max, 100 mA max)
8. CABLE COLORS SHOWN HERE APPLY TO ROSEMOUNT SUPPLIED SPECIAL CABLE FITTED WITH EExd GLANDS (P/N 1U03066)

Figure 2-7. Wiring Layout for IFT 3000 (CENELEC approved) System without HPS

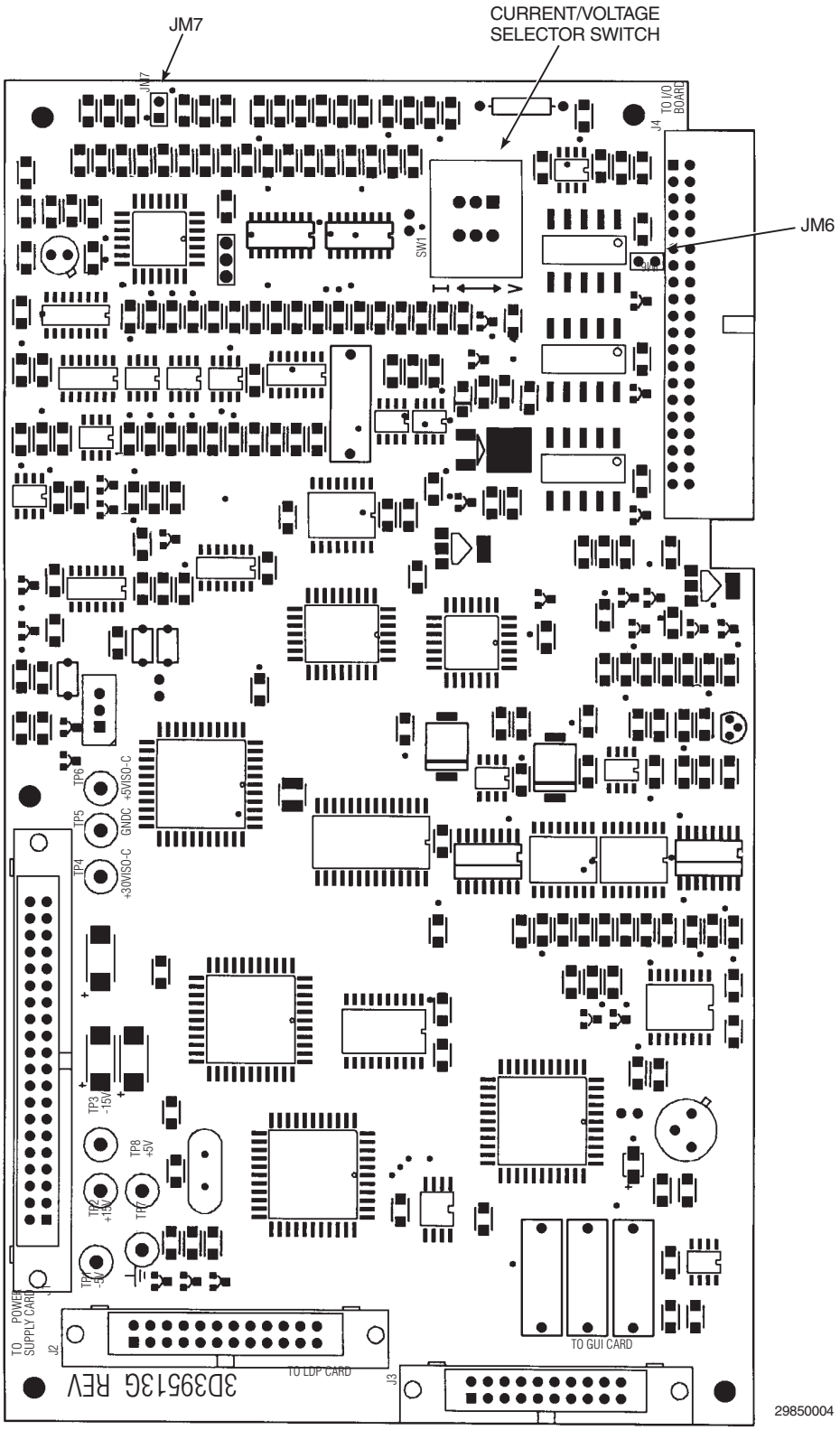

Figure 2-8. IFT Microprocessor Board Jumper Configuration

OUTPUT	JUMPER
HPS Probe (No HPS)	Remove JM6 Install JM6

(See Figure 2-8 for jumper locations.)

Figure 2-9. IFT Microprocessor Board Jumpers

OUTPUT	JUMPER
HPS Probe (No HPS)	Remove JM1 Install JM1

Figure 2-10. Interconnect Board Jumper Configuration

6. Before supplying power to the IFT, verify that the jumpers have been properly set in the IFT, Figure 2-5, Figure 2-8, and Figure 2-10.

7. Terminal strip J5 on the power supply board is used for supplying the IFT with power. Terminal strip J6 on the power supply board is used to supply the probe heater with power if an HPS is not used (Figure 2-6).

8. Ensure that the IFT 3000 is properly earthed by way of both the internal and external earthing hardware.

9. Ensure that the installation does not obscure the message on either the IFT nameplate or the IFT lid.

c. Analog Output and Relay Output Connections

1. The microprocessor board has a switch to select voltage or current operations. Figure 2-8 shows the switch location. In voltage mode, output is 0-10 V. In the current mode, the output can be configured from the setup menu to be 0-20 mA or 4-20 mA.

2. The analog output and relay outputs are programmed by the user as needed. The analog output is typically sent to recording equipment such as chart recorders. Relay outputs are typically sent to annunciators.

3. Relays K1 and K2 are user configurable from the PROBE SETUP submenu (Table 3-5). Typically these are used to indicate O_2 values above or below specified tolerances. OK relay is energized when unit is functioning properly.

4. All wiring must conform to local and national codes.

5. Connect the analog output and relay outputs as shown in Figure 2-11.

NOTES:

1. ⏚ DENOTES SHIELD CONNECTION.
2. OK RELAY IS ENERGIZED WHEN UNIT IS FUNCTIONING PROPERLY.

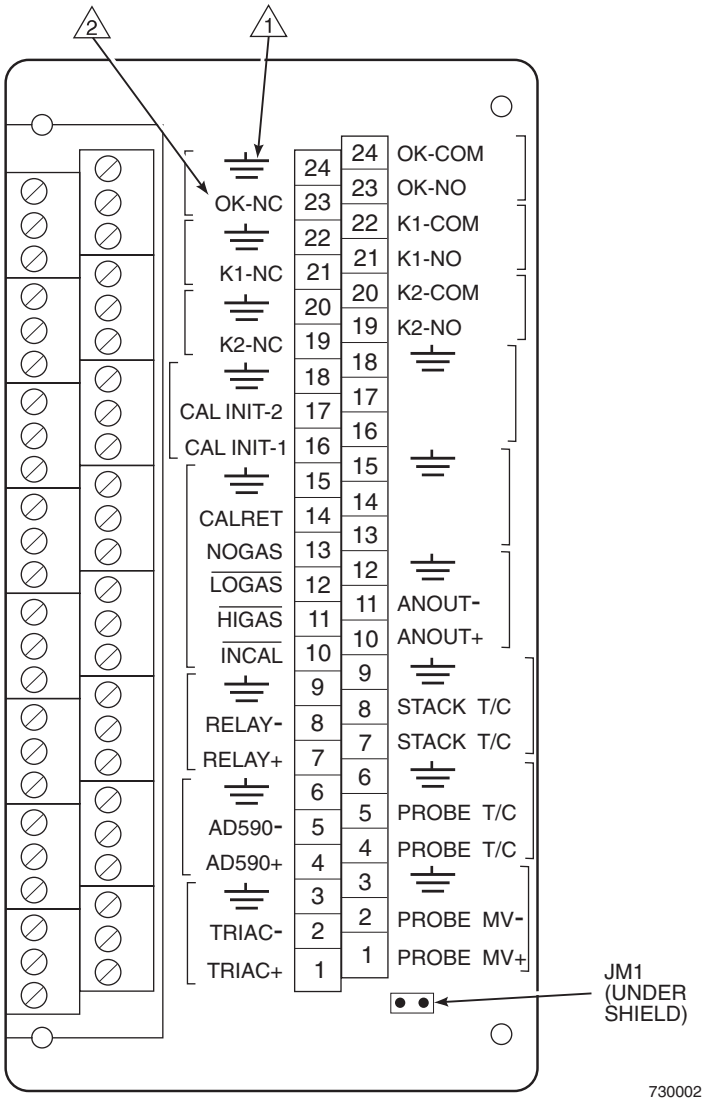

Figure 2-11. IFT Interconnect Board Output Connections

2-3 HEATER POWER SUPPLY INSTALLATION

WARNING

The Rosemount encode sheets (Product Ordering Matrix) allow a customer to order either the hazardous area version of the HPS 3000 or the non-hazardous area version. The hazardous area version has the symbol "EExd" on the apparatus nameplate. The non-hazardous area version does not. Ensure that if you have received the non-hazardous version that you do not install it in a potentially explosive atmosphere. This also applies to the hazardous/non-hazardous version of the IFT 3000.

WARNING

Before HPS installation, consult Safety Data Sheet 1M03243.

a. Mechanical Installation

The outline drawing of the CENELEC approved heater power supply enclosure in Figure 2-12, shows mounting centers and clearances. The CENELEC approved enclosure is designed to be mounted on a wall or bulkhead. The heater power supply should be installed no further than 45 m (150 ft) from the probe. The heater power supply must be located in a location free from significant ambient temperature changes and electrical noise. Ambient temperature must be between 0° to 60°C (32° to 140°F).

b. Electrical Connections

1. Electrical connections should be made as described in the electrical installation diagram, Figure 2-13. The wiring terminals are divided into two layers: the bottom (FROM PROBE) terminals should be connected first, the top (FROM ELECTRONICS) terminals should be connected last (Figure 2-14). Each terminal strip has a protective cover which must be removed when making connections. To remove the terminal covers, remove two slotted screws holding cover in place. Always reinstall terminal covers after making connections.

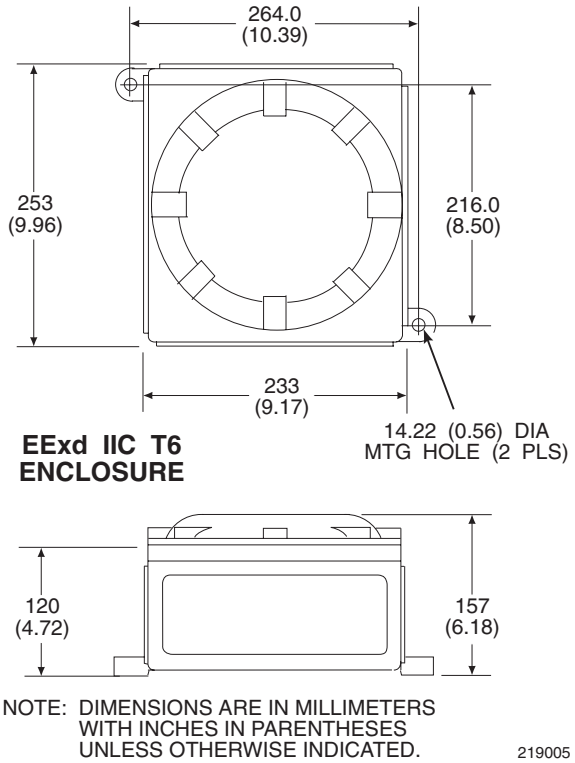

Figure 2-12. Outline of CENELEC Approved Heater Power Supply

2. Power Input: 120, 220 or 240 Vac. For 120 Vac usage, install jumpers JM4 and JM1 and remove JM5 if installed. For 220 or 240 Vac usage, install jumper JM5 and remove JM1 and JM4 if installed (see label, Figure 2-15).

CAUTION

If you reconfigure the equipment for a line voltage other than the one marked on the serial label and the mains filter of the power supply then you should change the marking on the serial label and the mains filter to state the new line voltage.

NOTE

Fuse specifications are shown in Figure 2-14.

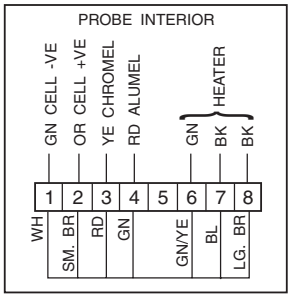

PROBE JUNCTION BOX WIRING 11

NOTES

1. RELAY WIRE IS OPTIONAL; RELAY CAN BE PERMANENTLY ENABLED WITH JUMPER IF NOT USED
2. STACK TC WIRING AS REQUIRED
3. ALL WIRES #16-#22 AWG TWISTED PAIR WITH SHIELD BY CUSTOMER EXCEPT AS NOTED
4. SPECIAL PROBE CABLE BETWEEN PROBE AND HPS BY ROSEMOUNT
5. REMOVE JM1 ON INTERCONNECT BOARD (IFT 3000)
6. REMOVE JM6 ON MICROPROCESSOR BOARD
7. IF RELAY WIRE OF NOTE 1 INSTALLED THEN REMOVE JM2 ON HPS 3000
8. IF STACK TEMPERATURE NOT USED
9. IF MPS 3000 NOT USED
10. 1 RELAY PER PROBE AVAILABLE FOR CALIBRATION STATUS INDICATION (48 V max, 100 mA max)
11. CABLE COLORS SHOWN HERE APPLY TO ROSEMOUNT SUPPLIED SPECIAL CABLE FITTED WITH EExd GLANDS (P/N 1U03066)

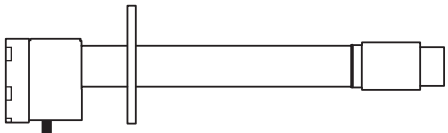

WC PROBE 3000 CENELEC APPROVED

ALWAYS DISCONNECT LINE VOLTAGE FROM HEATER POWER SUPPLY AND ANALOG ELECTRONICS (IF USED) BEFORE CHANGING JUMPERS.

JUMPER CONFIGURATIONS

1

LINE VOLTAGE SELECTION	JUMPER (INSTALL)
120 V.A.C.	JM4, JM1
220/240 V.A.C.	JM5

7

HEATER POWER	JUMPER
REMOTE	REMOVE JM2
ON	INSTALL JM2

PROBE HEATER VOLTAGE SECTION	JUMPER (INSTALL)
WORLD CLASS PROBE	JM7

ELECTRONICS SELECTION	JUMPER
NEW GENERATION ELECTRONICS	REMOVE JM3, JM6

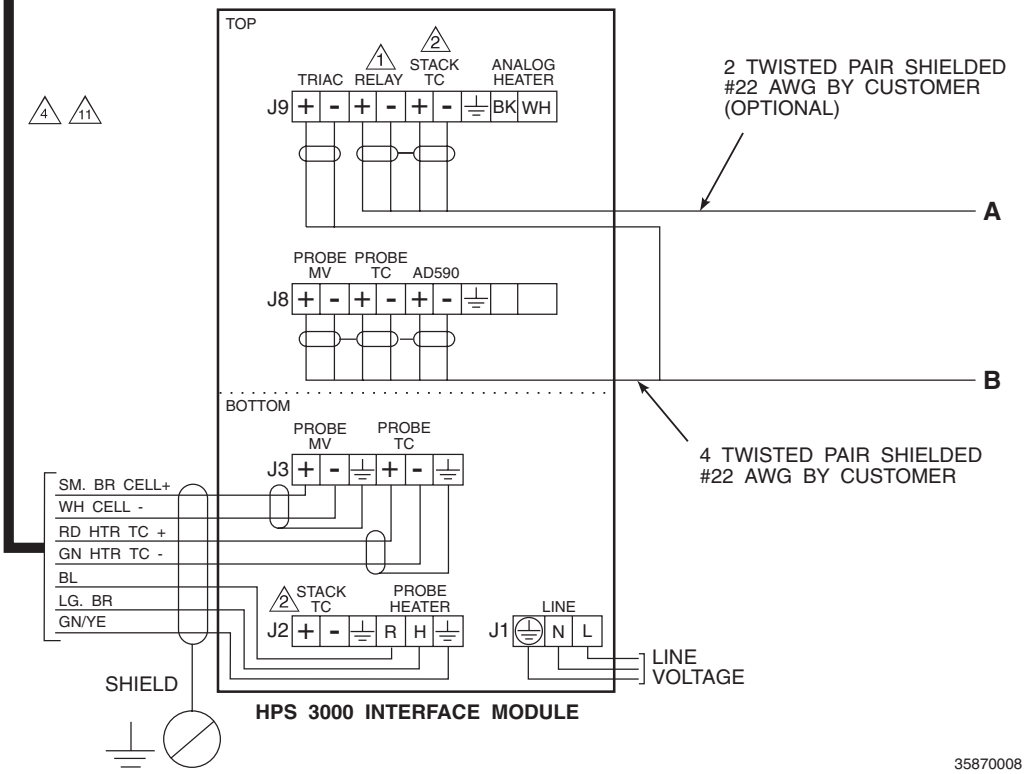

Figure 2-13. Wiring layout for IFT 3000 (CENELEC approved) with HPS (Sheet 1 of 2)

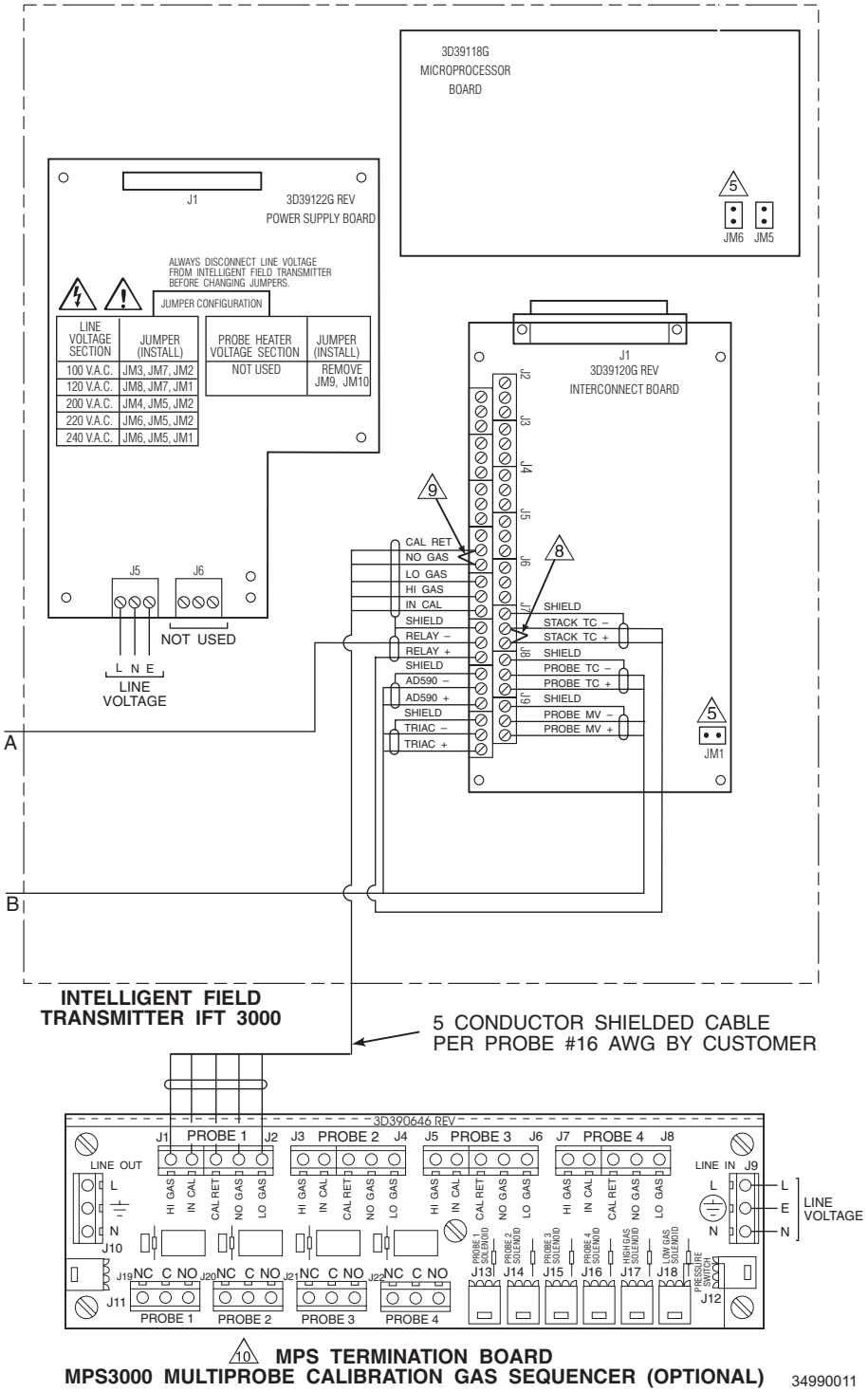

Figure 2-13. Wiring layout for IFT 3000 (CENELEC approved) with HPS (Sheet 2 of 2)

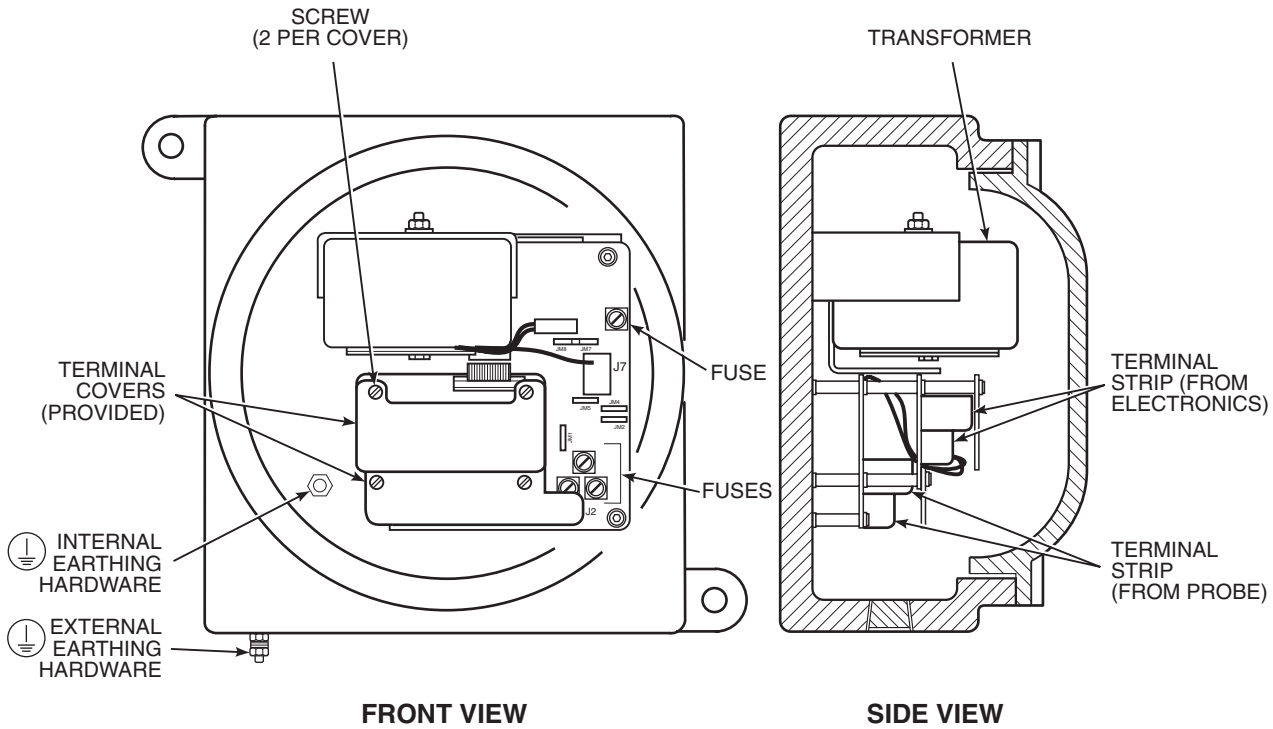

NOTE: FUSES SHOWN (F1 THROUGH F4) ARE 5 AMP, ANTI-SURGE, TYPE T TO IEC127 (ROSEMOUNT PART NUMBER 1L01293H02).

219006-1

Figure 2-14. CENELEC Approved Heater Power Supply Wiring Connections

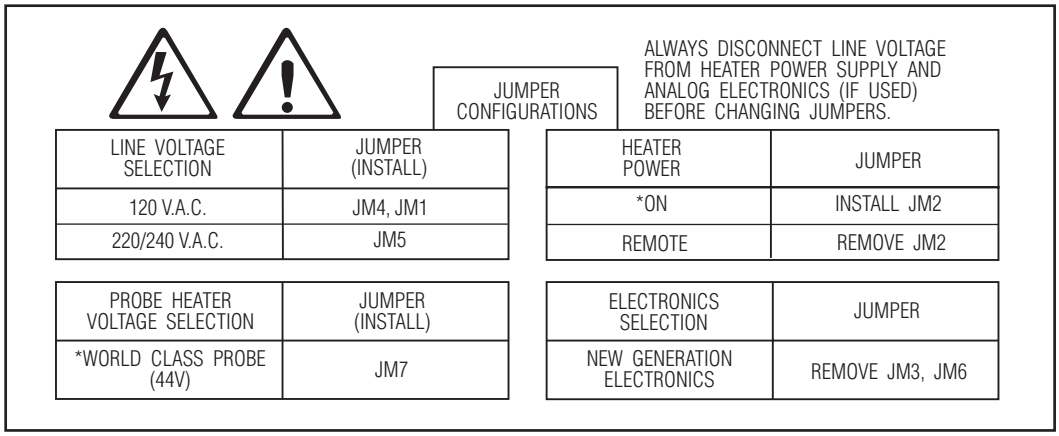

JUMPER CONFIGURATIONS

ALWAYS DISCONNECT LINE VOLTAGE FROM HEATER POWER SUPPLY AND ANALOG ELECTRONICS (IF USED) BEFORE CHANGING JUMPERS.

LINE VOLTAGE SELECTION	JUMPER (INSTALL)
120 V.A.C.	JM4, JM1
220/240 V.A.C.	JM5

HEATER POWER	JUMPER
*ON	INSTALL JM2
REMOTE	REMOVE JM2

PROBE HEATER VOLTAGE SELECTION	JUMPER (INSTALL)
*WORLD CLASS PROBE (44V)	JM7

ELECTRONICS SELECTION	JUMPER
NEW GENERATION ELECTRONICS	REMOVE JM3, JM6

219007

Figure 2-15. Jumper Selection Label.

CAUTION

If you reconfigure the equipment for a line voltage other than the one marked on the serial label and the mains filter of the power supply then you should change the marking on the serial label and the mains filter to state the new line voltage.

3. The power cable should comply with safety regulations in the user's country and should not be smaller than 16 gauge, 3 amp.

WARNING

Before supplying power to the heater power supply, verify that jumpers JM3 and JM6 are removed, and JM7 is installed. If relay wire (Figure 2-13, Note 1) is installed, JM2 must be removed from HPS Motherboard (Figure 2-16).

4. Before supplying power to the heater power supply, verify that the jumpers on the motherboard, Figure 2-16, are properly configured. Jumpers JM3, JM6, should be removed and JM7 should be installed. Additionally, make sure that the proper jumper for your line voltage is installed, Figure 2-15. If relay wire (Figure 2-13, note 1) is not installed, JM2 should be installed on the HPS Motherboard (Figure 2-16).

5. Ensure that the HPS 3000 is properly earthed by way of both the internal and external earthing points.

6. Ensure the installation does not obscure the messages on either the HPS nameplate or HPS lid.

NOTE

Refer to Figure 2-8 and Figure 2-10 for proper IFT jumper configuration. IFT microprocessor and interconnect board jumper configurations must be set correctly in order for HPS to work properly.

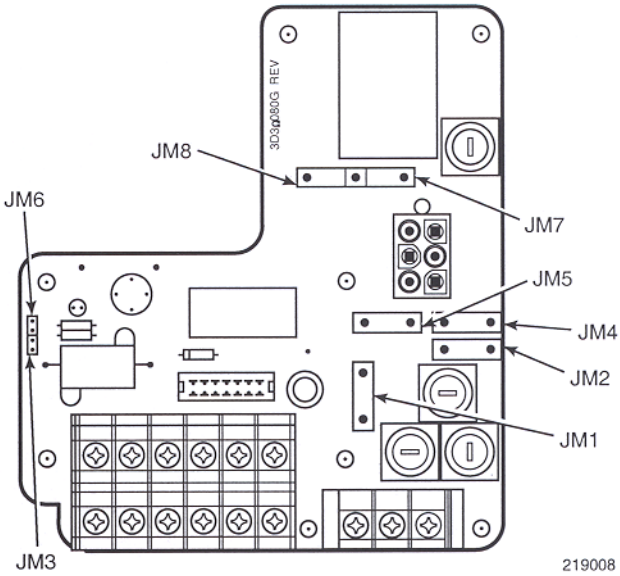

Figure 2-16. Jumpers on HPS Motherboard

2-4 MULTIPROBE TEST GAS SEQUENCER INSTALLATION

WARNING

The MPS 3000 Multiprobe Test Gas Sequencer must be installed in a non-hazardous, explosive-free environment.

NOTE

A Z-Purge option is available for the MPS 3000. Appendix DX contains information concerning the Z-Purge.

a. Mechanical Installation

The outline drawing of the MPS module in Figure 2-17 shows mounting centers and clearances. The box is designed to be mounted on a wall or bulkhead. The MPS module should be installed no further than 91 m (300 ft) piping distance from the probe, and no more than 303 m (1000 ft) cabling distance from the IFT. Install the MPS module in a location where the ambient temperature is between -30° and 71°C (-20° and 160°F).

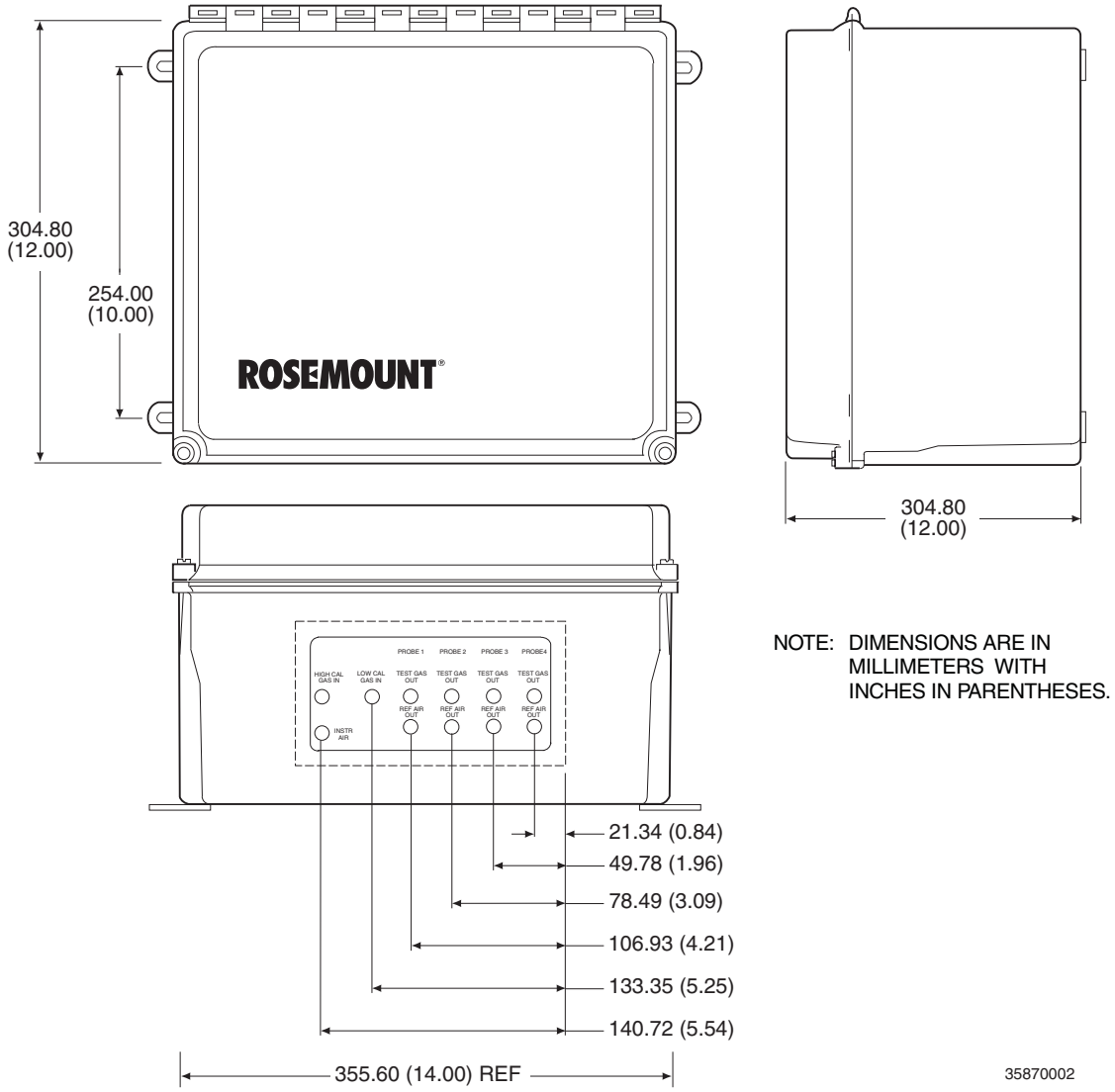

NOTE: DIMENSIONS ARE IN MILLIMETERS WITH INCHES IN PARENTHESES.

Figure 2-17. MPS Module

b. Gas Connections

Figure 2-18 shows the bottom of the MPS where the gas connections are made. 1/4 in. threaded fittings are used.

1. Connect the reference air supply to INSTR. AIR IN. The air pressure regulator valve is set at the factory to 138 kPa (20 psi). If the reference air pressure should need readjustment, turn the knob on the top of the valve until the desired pressure is obtained.

2. Connect the high O_2 test gas to HIGH GAS. The test gas pressure should be set at 138 kPa (20 psi).

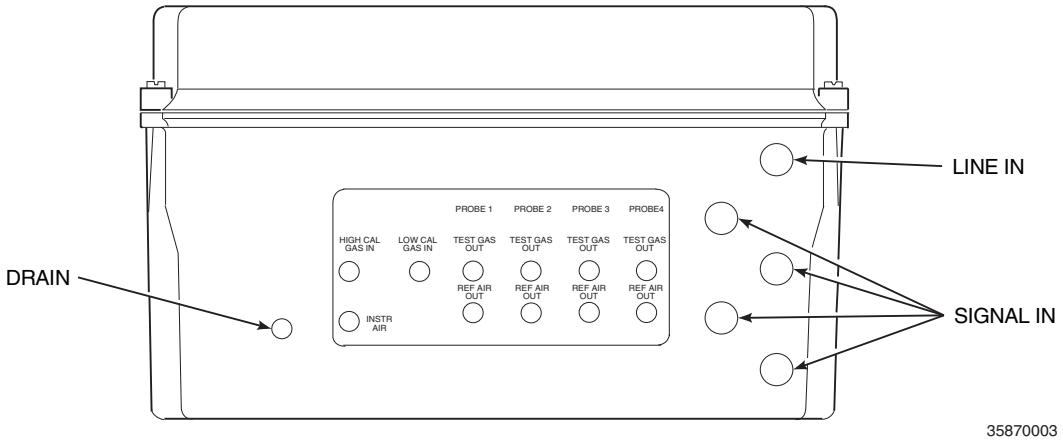

Figure 2-18. MPS Gas Connections

CAUTION

Do not use 100% nitrogen as a low (zero) gas. It is suggested that the low gas be between 0.4% and 2.0% O_2. Do not use gases with hydrocarbon concentrations of more than 40 parts per million. Failure to use proper gases will result in erroneous readings.

3. Connect the low O_2 test gas to LOW GAS. The test gas pressure should be set at 138 kPa (20 psi).

4. Connect the REF AIR OUT to the reference gas fitting on the probe junction box.

5. Connect the TEST GAS OUT to the calibration gas fitting on the probe junction box.

6. If the MPS is configured for multiple probes (up to four), repeat steps 4 and 5 for each additional probe.

CAUTION

A check valve is required for each probe connected to an MPS to prevent condensation of flue gas in the calibration gas lines. The check valve must be located between the calibration fitting and the gas line.

c. Electrical Connections

Electrical connections should be made as described in the electrical installation diagram, Figure 2-19. All wiring must conform to local and national codes. The electrical connections will exist only between the electronics package and the MPS to enable automatic and semiautomatic calibration. If more than one probe system is being used, the additional probes and electric packages would be wired similarly to the first probe.

NOTE

MPS power supply fuse locations and specifications are shown in Figure 2-19.

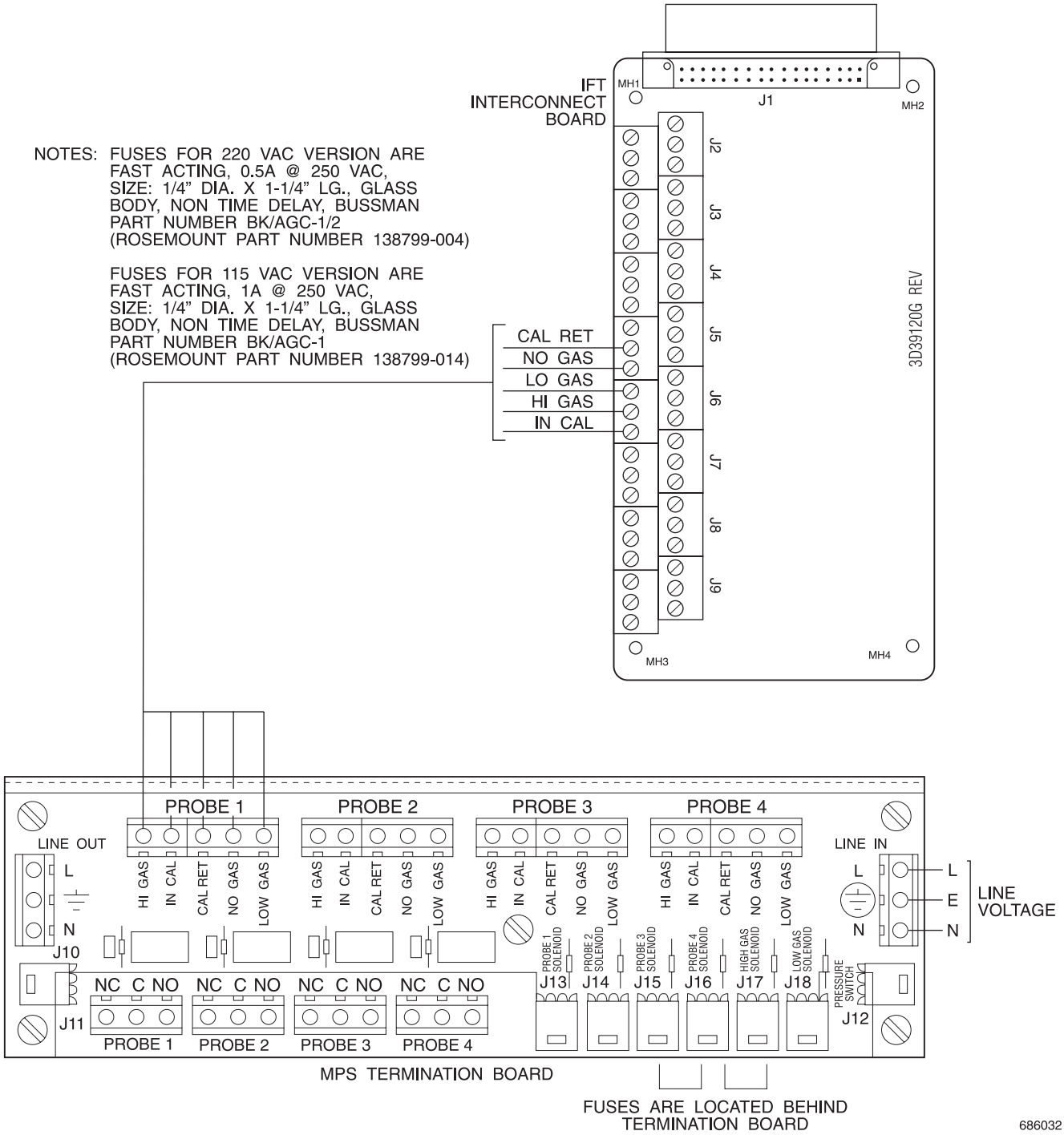

Figure 2-19. MPS Electrical Connections

1. Run the line voltage through the bulkhead fitting on the bottom of the MPS where marked LINE IN, Figure 2-18. Refer to Figure 2-19. Connect the line voltage to the LINE IN terminal on the MPS terminal board located inside the unit. Tighten the cord grips to provide strain relief.

2. The MPS can accommodate up to four probes. The terminal strips on the MPS termination board are marked PROBE 1, PROBE 2, PROBE 3, and PROBE 4. Select PROBE 1 if this is the first probe and electronic package installed on the MPS.

3. Make the connections from the MPS to the IFT as shown in Figure 2-19. Run wires from the MPS Termination Board inside the unit through the bulkhead fitting on the bottom of the unit where marked SIGNAL IN, Figure 2-18. After the connections are made, tighten the cord grips to provide strain relief.

NOTE

Upon completing installation, make sure that the probe is turned on and operating prior to firing up the combustion process. Damage can result from having a cold probe exposed to the process gases.

During outages, and if possible, leave all probes running to prevent condensation and premature aging from thermal cycling.

CAUTION

If the ducts will be washed down during outage, MAKE SURE to power down the probes and remove them from the wash area.

SECTION 3
SETUP AND OPERATION

WARNING

See Safety Data Sheet 1M03296 for safety related information.

3-1 OVERVIEW

Ensure that the oxygen analyzer, heater power supply, and intelligent field transmitter have been properly connected. It is important to check that grounding and screening of terminations are correctly made to prevent the introduction of ground loops. The IFT is equipped with noise suppression circuitry on the power supply and signal input lines. Proper grounding at installation will ensure accuracy of function.

The following five languages can be selected within the IFT:

English	Italian
French	Spanish
German	

The Intelligent Field Transmitter may be supplied with any one of three configurations. These configurations are the blind version, display only version, and the deluxe version. The three versions differ as follows.

a. Blind Version

WARNING

HART connections must be made outside of the hazardous area. Because the Hart option is not protected by energy limiting barriers, it must not be interfaced from within a hazardous area. The signal cables should be routed outside the hazardous area and the connections made external to the hazardous area.

The blind version has no display and no keypad. With this version, an external HART communications device is required. Refer to Appendix JX regarding the HART Communications option.

b. Display Only Version (LDP)

The display only version is also known as the LED Display Panel (LDP) version. This IFT contains a bright LED display and a four-key pad. The LDP version provides for calibration capability only.

c. Deluxe Version (GUI)

The deluxe version is also known as the General User Interface (GUI) version. This IFT contains an LED display, liquid crystal display panel, and an eight-key pad that allows probe and electronics configuration, calibration, and troubleshooting of the probe and electronics.

This section of the manual deals with operator controls and displays available with the GUI equipped IFT. Operating parameters are listed and instructions are included for viewing and changing them.

Operating instructions for the IFT equipped with the LDP and four membrane keys are included in Section 4.

Any procedures not associated with normal operation are included in Section 2, Installation, or Section 5, Troubleshooting.

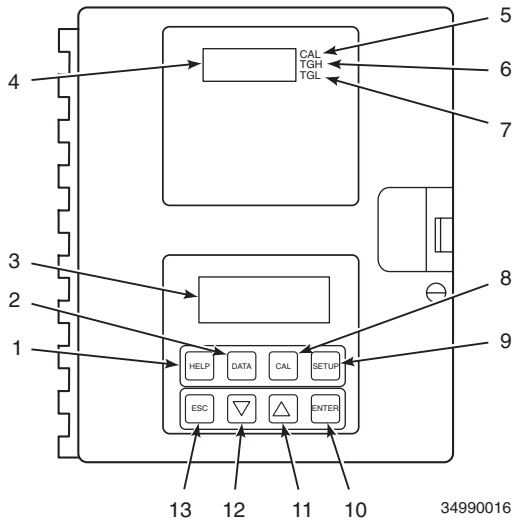

Figure 3-1. IFT with GUI and LDP Front Panel

3-2 IFT WITH GUI AND LDP FRONT PANEL CONTROLS AND INDICATORS (See Figure 3-1.)

Fig. 3-1 Index No.	Control/ LED	Description
1	HELP	Context sensitive HELP is displayed when this key is pressed.
2	DATA	DATA key is used to access DATA menu.
3	LCD Display	Top line displays system status, menu and probe number.
4	LED Display	Indicates current O_2 or test value (only in LDP equipped units).
5	CAL	Calibration in progress indicator light (only in LDP equipped units).
6	TGH	High test gas indicator light. High test gas is being used in calibration process (only in LDP equipped units).
7	TGL	Low test gas indicator light. Low test gas is being used in calibration process (only in LDP equipped units).
8	CAL	CAL key used to access CALIBRATE menu.
9	SETUP	SETUP key used to access SETUP menu.
10	ENTER	The ENTER key is used to select a lower level menu, initiate calibration, or select a parameter to change.
11	▲	The increase key is used to move the cursor (asterisk) when scrolling through lists or to increase a parameter value.
12	▼	The decrease key is used to move the cursor (asterisk) when scrolling through lists or to decrease a parameter value.
13	ESC	The escape key is used to exit to a high level menu or to abort a parameter change.

3-3 HELP KEY

The HELP key will display explanatory information about a menu, sub-menu, or parameter that the asterisk is next to when pressed. The HELP key is not available during calibration routines. Refer to Table 3-1 for sample HELP messages.

Table 3-1. Sample HELP Messages

MENU, SUB-MENU, HELP OR PARAMETER NAME	MESSAGE
PROBE DATA	Press ENTER key to access DATA menu.
CALIBRATE O_2	The CAL menu is used to start calibration and view calibration.
SETUP	The SETUP menu is used to configure the IFT-3000.

3-4 STATUS LINE

The top line of the LCD display (3, Figure 3-1) is a status line that always displays system status, menu name, and O_2 level. The system status displays are:

a. **OK** - System is functioning correctly.

b. **CAL** - Calibration in progress.

c. **C Err** - Calibration error.

d. **H Err** - Heater error.

e. **TGLow** - Test gas is low.

f. **HiO_2** - O_2 value is above the high alarm limit.

g. **LoO_2** - O_2 value is below the low alarm limit.

h. **R Hi** - Resistance is above the high limit.

i. **Off** - The probe has been turned off because the IFT cannot control the heater temperature.

j. **PRBE** - The probe is disconnected, cold, or leads are reversed.

3-5 QUICK REFERENCE CHART

The quick reference chart on pages 3-4 and 3-5 is designed to help you determine how to get where you want to be in the menu system. The chart shows all the available menu and sub-menu options for the IFT. Follow the lines to determine which choices to make. Moving down a level on the chart is accomplished by use of the ENTER key. To move up a level on the chart, press the ESCAPE key.

3-6 MAIN MENU

When power is first applied to the IFT, the MAIN menu (Table 3-2) is initially displayed. It is from the MAIN menu that the PROBE DATA (Table 3-3), CALIBRATE O_2 (Table 3-4), and SETUP (Table 3-5) menus can be accessed.

Table 3-2. Main Menu

MENU SELECTION	DESCRIPTION
PROBE DATA	Refer to Table 3-3.
CALIBRATE O_2	Refer to Table 3-4.
SETUP	Refer to Table 3-5.

Table 3-3. PROBE DATA Sub-Menu.

SUB-MENU SELECTION	PARAMETER		DESCRIPTION
Process Data	O_2	__%	O_2 value for the probe.
	Efficiency	ENA/DIS	Enable/Disable efficiency display.
	Stack Temp	__DegC	Stack temperature.
Diagnostic Data			
Temperature	Cell	__DegC	Cell temperature of the probe.
	Stack	__DegC	Stack temperature.
	Cold Junct	__DegC	Cold junction temperature.
Voltages	Cell	__mV	Cell voltage of the probe.
	Cell T/C	__mV	Cell thermocouple voltage of the probe.
	Stk T/C	__mV	Stack thermocouple voltage.
	Cold Jnt	__mV	Cold junction voltage.
Output Values	Analog	__% FS	Analog output voltage.
	K1 State	OFF/ON	Status of relay 1.
	K2 State	OFF/ON	Status of relay 2

QUICK REFERENCE CHART

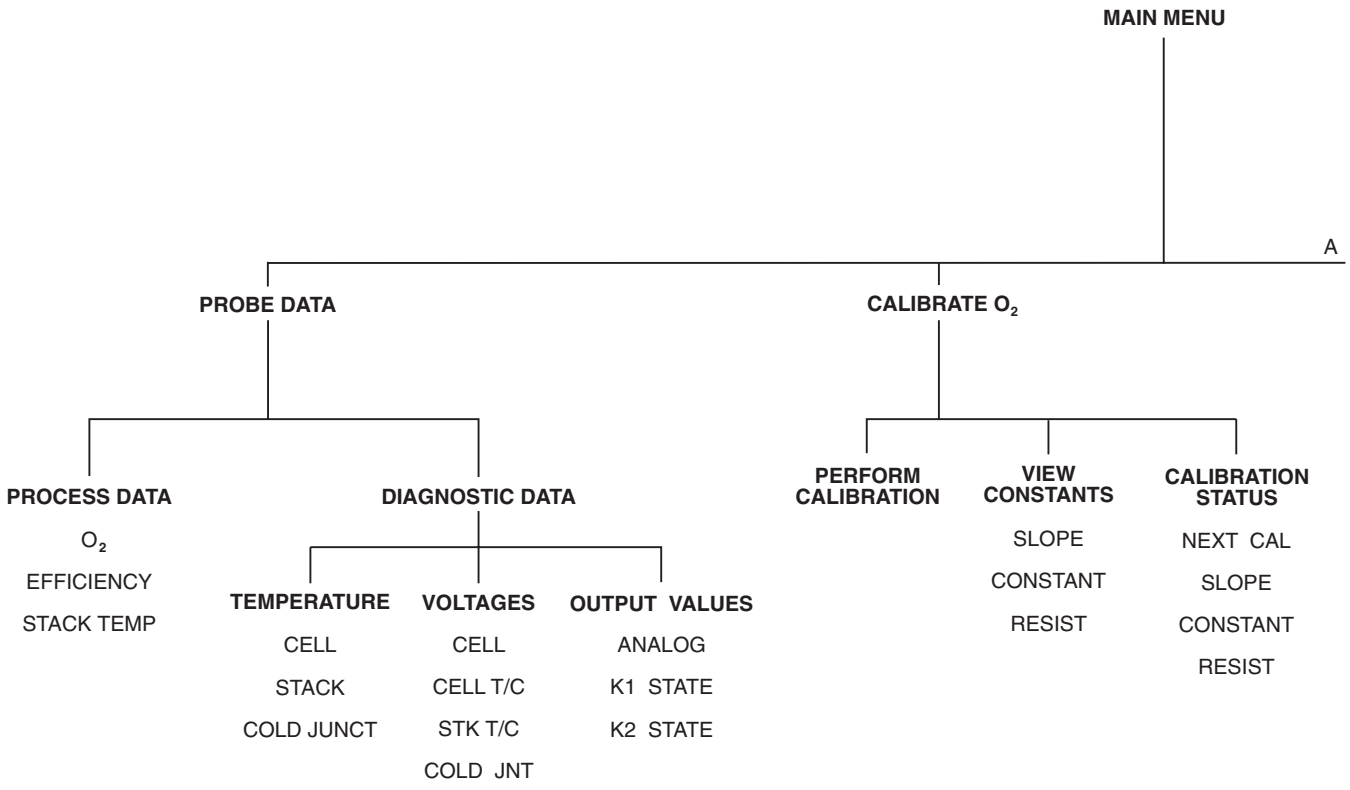

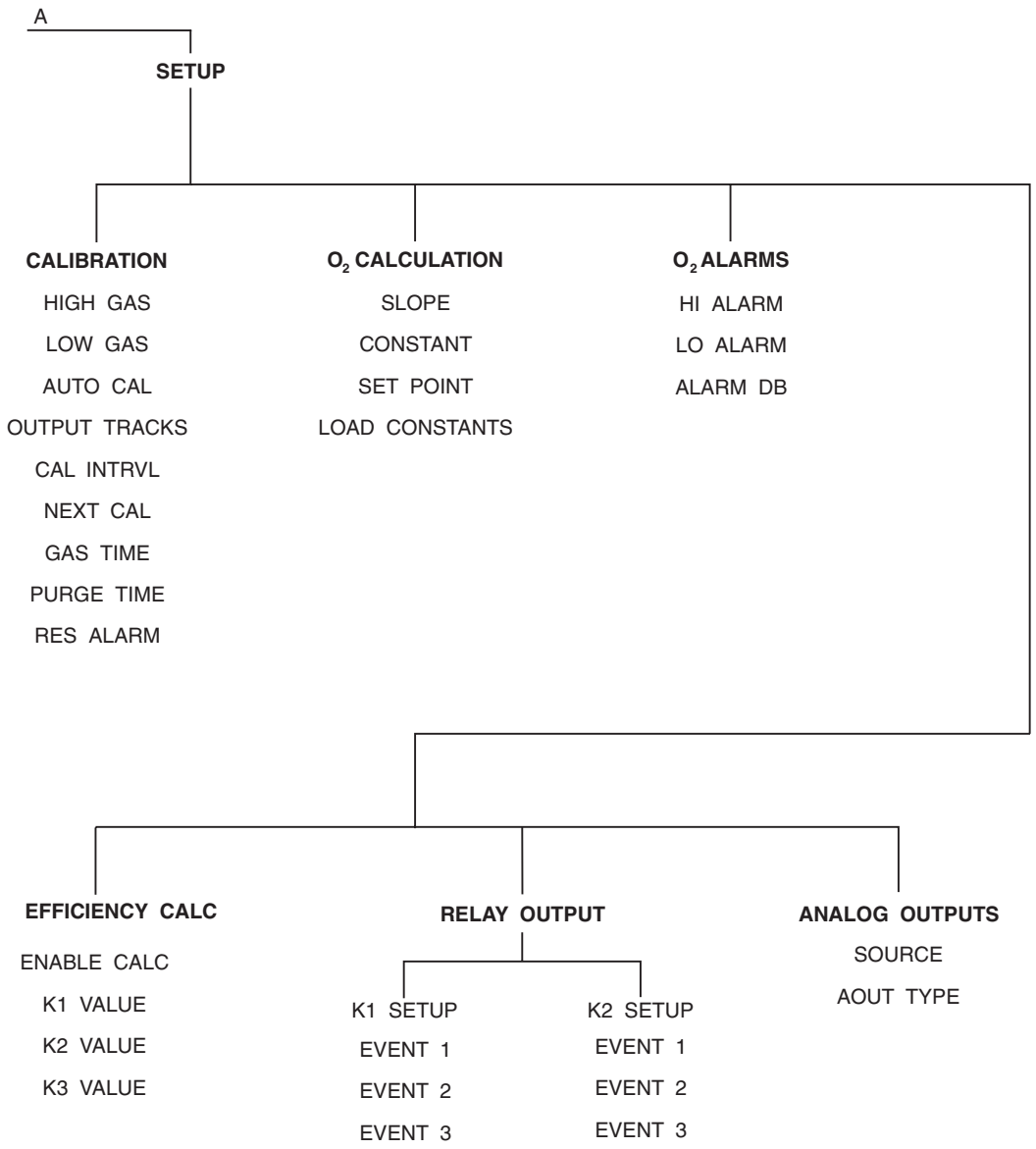
A
SETUP
CALIBRATION
HIGH GAS
LOW GAS
AUTO CAL
OUTPUT TRACKS
CAL INTRVL
NEXT CAL
GAS TIME
PURGE TIME
RES ALARM
O2 CALCULATION
SLOPE
CONSTANT
SET POINT
LOAD CONSTANTS
O2 ALARMS
HI ALARM
LO ALARM
ALARM DB
EFFICIENCY CALC
ENABLE CALC
K1 VALUE
K2 VALUE
K3 VALUE
RELAY OUTPUT
K1 SETUP
EVENT 1
EVENT 2
EVENT 3
K2 SETUP
EVENT 1
EVENT 2
EVENT 3
ANALOG OUTPUTS
SOURCE
AOUT TYPE

3-7 PROBE DATA SUB-MENU

The PROBE DATA sub-menu is a list of all the parameters of the system as it is currently configured. To access the PROBE DATA sub-menu, press the DATA key at any time. The increase and decrease keys are used to scroll through the list. The PROBE DATA sub-menu can be viewed but not changed. The operator must use the SETUP menu to change any of the parameters.

There are two selections available on the PROBE DATA sub-menu; Process Data and Diagnostic Data. Refer to Table 3-3 for contents of the sub-menu.

3-8 CALIBRATE O_2 SUB-MENU

The CALIBRATE O_2 sub-menu (Table 3-4) is used to enter the calibration mode. To access the CALIBRATE O_2 sub-menu, press the CAL key at any time. The increase and decrease keys are used to scroll through the list.

The CALIBRATE O_2 sub-menu has three selections available: Perform Calibration, View Constants, and Calibration Status. Refer to Table 3-4 for contents of the sub-menus.

Perform Calibration has two options depending on how Auto Cal is selected in Probe Setup. Refer to SETUP Setting in Table 3-4.

3-9 SETUP SUB-MENU

The SETUP sub-menu is used to enter all operator set variables into the system. To access the SETUP sub-menu, press the SETUP key at any time. To select the parameter to be changed, move the cursor to the desired parameter using the arrow keys. Press ENTER to select that parameter. To change the value for that parameter, use the arrow keys to increase or decrease the value. Press ENTER to save changes.

There are six selections available on the SETUP sub-menu: Calibration, O_2 Calculation, O_2 Alarms, Efficiency Calc., Relay Outputs, and Analog Outputs. Refer to Table 3-5 for the contents of the SETUP sub-menu.

NOTE

Dip shunt is to be set for voltage or current operation. Refer to Figure 2-7.

Table 3-4. CALIBRATION O_2 Sub-Menu

SUB-MENU SELECTION	SETUP SETTING (SEE TABLE 3-4)	DISPLAY	DESCRIPTION
Perform Calibration	Auto Cal in Probe Setup is YES	Press ENTER to start Auto Calibration.	MPS will start calibration probe.
		Starting Automatic Calibration	
		High Gas _____%O_2 Time Left 0:00	Value for high O_2 test gas. Amount of time necessary to complete the current testing phase in min:sec.
		Cell mV _____mV	Cell voltage of the probe.
		Low Gas _____%O_2 Time Left 0:00	Value for low O_2 test gas. Amount of time necessary to complete the current testing phase in min:sec.
		Cell mV _____mV	Cell voltage of the probe.
		Resistance Check Time Left 0:00	Resistance check in progress.
		Cell _____mV _____C	Cell voltage and probe temperature.
		Calibration Complete Purging 0:00	Gas lines are being purged of test gas.
		Cell _____mV _____C	Cell voltage and probe temperature.
		Calibration Complete	
	Auto Cal in Probe Setup is NO.	Press ENTER to start Manual Calibration.	Manual calibration sequence will begin when ENTER is pressed.
		Switch ON high test gas. Press ENTER when ready.	
		High gas _____%O_2	High O_2 test gas value.
		Press ENTER when O_2 reading is stable.	
		Turn off high test gas and ON low test gas. Press ENTER when ready.	
		Low gas _____%O_2	Low O_2 test gas value.
		Press ENTER when O_2 reading is stable.	
		Resistance Check	Resistance check in progress.
		Turn off low test gas. Press ENTER when ready.	
		Press ENTER when probe has returned to process.	
View Constants	(N/A)	Slope _____mV/D Constant _____mV Resist _____ohms	Slope for probe. Offset for probe. Resistance for probe.
Calibration Status		Next Cal XD XH	Time until next calibration in number of days and number of hours.
	(N/A)	Slope _____ Constant _____ Resist _____	Status of the slope. Status of the offset. Status of the resistance.

Table 3-5. SETUP Sub-Menu

SUB-MENU SELECTION	PARAMETERS		DESCRIPTION
Calibration	High Gas	____%O_2	Value of high O_2 test gas.
	Low Gas	____%O_2	Value of low O_2 test gas.
	Auto Cal	YES/NO	If system has MPS, select YES or NO.
	Output Tracks	YES/NO	Select output tracks.
	Cal Intrvl	XD XH	Select time between calibrations in number of days and number of hours. (1 year max.)
	Next Cal	XH	Time until next calibration in number of hours. (1 year max.)
	Gas Time	0:00	Amount of time the test gases will be turned on in number of minutes and seconds, allow enough time for signal values to stabilize.
	Purge Time	0:00	Amount of time for gas lines to clear of test gas.
	Res Alarm	_____	Resistance alarm set from 50 to 10,000 ohms.
O_2 Calculation	Slope	____ mV/D	Set value between 34.5 and 57.5.
	Constant	____ mV	Set value between -20.0 and +20.0 mV.
	Set Point	____°C	Set either 736 for World Class 3000 probes or 843 for 218 probes.
	Load Constants		Press ENTER to load constants from last calibration.
O_2 Alarms	Hi Alarm	____% O_2	Set value for high alarm limit.
	Lo Alarm	____% O_2	Set value for low alarm limit.
	Alarm DB	____% O_2	Set value for alarm dead band.
Efficiency Calc.	Enable Calc.	YES/NO	Select YES to enable, NO to disable.
	K1 Value	_____	Set between 0.0000 and 1.0. Refer to Table 3-6.
	K2 Value	_____	Set between 0.0000 and 1.0. Refer to Table 3-6.
	K3 Value	_____	Set between 1.000 and 20.0. Refer to Table 3-6.
Relay Outputs			
K1 Setup	Event 1	_____	Set event to activate relay.
	Event 2	_____	Set event to activate relay.
	Event 3	_____	Set event to activate relay.
K2 Setup	Event 1	_____	Set event to activate relay.
	Event 2	_____	Set event to activate relay.
	Event 3	_____	Set event to activate relay.
Analog Outputs	Source (EFF or O_2)	0-100%	Source can be set to 0-1%, 0-5%, 0-10%, 0-25%, 0-100% of O_2, or 0-100% Efficiency
	Aout Type 0-10V		Aout Type can be set to 0-10 V, 0-20 mA, or 4-20 mA

CAUTION

Ensure the correct voltage is selected when using HPS 3000 with either WC 3000 probes or 218 probes. Refer to Figure 2-14, Jumper Selection Label for proper voltage selections. If incorrect SET POINT is selected, damage to the probe may occur.

Table 3-6. Efficiency Constants

CONSTANT	UNITED STATES GAS	UNITED STATES OIL	EUROPE GAS	EUROPE OIL
K1	0.407	0.432	0.66	0.69
K2	0.0	0.0	0.0082	0.0051
K3	5.12	5.12	12.28	8.74

3-10 SYSTEM CALIBRATION

a. Overview

The primary purpose of an oxygen analyzer is to give an accurate representation of the percentage of O_2 in the gas stream. The system should be calibrated periodically to maintain an accuracy which may otherwise reduce over time due to cell aging.

A requirement for calibration is a set of two accurate test gases spanning the oxygen range of most interest. For example, 0.4% and 8% for a 0-10% oxygen range.

Under normal conditions the probe should not need frequent calibration. Because calibration is necessary, the system can be equipped with the optional MPS 3000 Multiprobe Test Gas Sequencer for fully automatic calibration at regular intervals. Without an MPS, the probes must be calibrated manually (semi-automatically).

b. Probe Calibration

1. Previous Calibration Constants Functionality. Three sets of registers are used to store calibration constants. These are: Latest Calibration, Previous Calibration, and Calculation. Only the values in the Calculation registers are used to calculate the oxygen value for display and representation on the analog output signal. These values may be changed in two ways:

   (a) The operator may change the Calculation values by entering the SETUP menu and then entering the O_2 Calculations sub-menu. The operator may adjust the slope and constant individually or reset both to the values calculated during the last good calibration. Simultaneously resetting both values is done by selecting Load Constants and pressing ENTER.

   (b) The IFT will automatically change the values after each successful calibration.

   The values in the Latest Calibration registers are updated after every complete calibration even if the calibration is not successful. If the calibration is successful, the values in the Latest Calibration registers are copied into the Previous Calibration registers. This function is accomplished prior to the update of the Latest Calibration registers. The values from successful calibrations are automatically loaded into the Calculation registers for use in future O_2 calculations. If a calibration fails, the Previous Calibration registers and Calculation registers retain their existing values, while the Latest Calibration registers record the values of the failed calibration.

2. Calibration Methods. There are three calibration methods: manual (semi-automatic), manually initiated automatic, and fully automatic. Manual (semiautomatic) calibration is done without an MPS unit. Test gases are switched on and off by the operator and the IFT is sequenced through the calibration procedure by the operator with the front panel keyboard. The IFT prompts the operator for the correct action. Manually initiated automatic calibration is done with an MPS. The operator manually initiates the calibration at the IFT or through a remote switch, and the IFT controls the operation of the MPS unit and the calibration sequencing. Fully automatic calibration requires no action from the operator. The setup is the same as semiautomatic except the IFT automatically

initiates the calibration at a fixed calibration interval. In this mode the operator can also manually initiate calibrations between the intervals in the same manner as semiautomatic calibrations.

c. Manual (Semiautomatic) Calibration

1. Test Gases for Manual (Semiautomatic) Calibration. There are two options for supplying test gases to the probe during semiautomatic calibration. The first "A" uses refillable bottles and adjustable 2-stage pressure regulators; the second, "B" uses disposable bottles and a fixed single-stage regulator to provide a mixed flow. Normally, the first (method "A") will have a higher cost and not be portable. The second ("B") is less costly, portable, and weighs about 4.54 kg (10 lbs).

   Test Method "A" Fixed Tanks and Manifolds.

   (a) Required Equipment.

CAUTION

Do not use 100% nitrogen as a zero gas. It is suggested that gas for the zero be between 0.4% and 2.0% O_2. Do not use gases with hydrocarbon concentrations of more than 40 parts per million. Failure to use proper gases will result in erroneous readings.

1 Two tanks of precision calibration gas mixtures. Recommended calibration gases are nominally 0.4 percent and 8.0 percent oxygen in nitrogen.

Two sources of calibrated gas mixtures are:

LIQUID CARBONIC GAS CORP. SPECIALTY GAS LABORATORIES

700 South Alameda Street
Los Angeles, California
90058
213/585-2154

767 Industrial Road
San Carlos, California 94070
415/592-7303

9950 Chemical Road
Pasadena, Texas 77507
713/474-4141

12054 S.W. Doty Avenue
Chicago, Illinois 60628
312/568-8840

603 Bergen Street
Harrison, New Jersey 07029
201/485-1995

255 Brimley Road
Scarborough, Ontario,
Canada
416/266-3161

SCOTT ENVIRONMENTAL TECHNOLOGY, INC.
SCOTT SPECIALTY GASES

2600 Cajon Blvd.
San Bernardino, CA 92411
714/887-2571
TWX: 910-390-1159

1290 Combermere Street
Troy, MI 48084
314/589-2950

Route 611
Plumsteadville, PA 18949
215/766-8861
TWX: 510-665-9344

2616 South Loop West,
Suite 100
Houston, TX 77054
713/669-0469

2 A check valve is required at the probe (between the calibration fitting and the gas line) to prevent the migration of process gases down the calibration gas line.

3 Two, 2-stage pressure regulators with stainless steel diaphragms for tanks. Maximum output required: 138 kPa (20 psi).

4 One instrument air pressure regulator: 138 kPa (20 psi) maximum and a supply of clean, dry instrument air.

5 Two zero-leakage shutoff valves.

6 Miscellaneous oil-free tubing and fittings.

(b) Calibration

1 A typical calibration setup is shown in Figure 3-2. Care must be taken that all fittings are tight and free from oil or other organic contaminants. Small openings can cause back diffusion of oxygen from the atmosphere even though positive pressures are maintained in the lines.

NOTE

The probe calibration gas fitting has a seal cap which must be in place at all times except during calibration.

In addition to the precision calibration gas mixtures, clean, dry, oil-free instrument air should be used for calibration.

CAUTION

For optimum accuracy, this calibration should be run with the process at normal temperature and operating conditions.

When the calibration gas line exceeds 1.8 m (6 ft) in length from the leak tight valves, a check valve, Rosemount P/N 6292A97H02, should be installed next to the calibration gas connection on the probe to prevent breathing of the line with the process gas and subsequent gas condensation and corrosion.

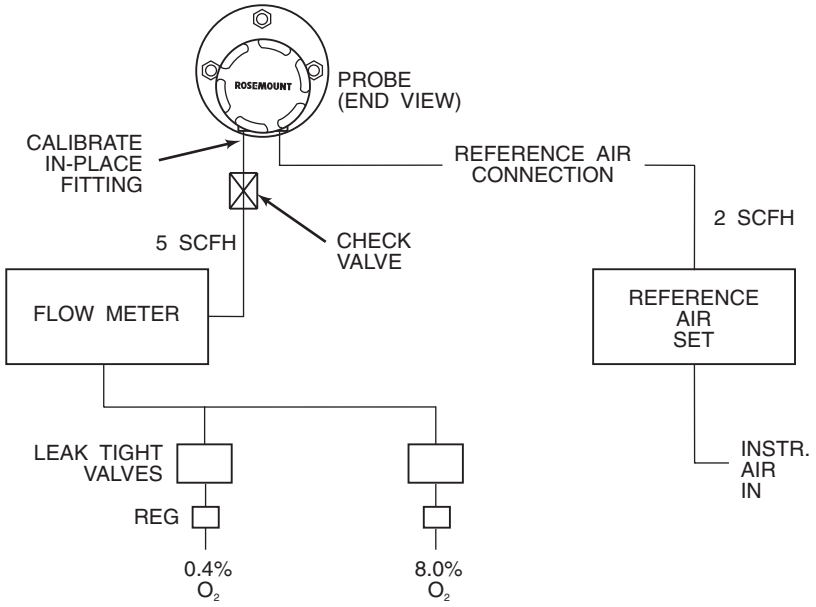

NOTE: PROBE CALIBRATION GAS FITTING HAS A SEAL CAP THAT MUST BE IN PLACE AT ALL TIMES EXCEPT DURING CALIBRATION.

730013

Figure 3-2. Typical Calibration Setup

NOTE

Only set the test gas flowmeter upon initial installation and after changing the diffusion element. A slightly lower test gas flow rate may indicate a plugged diffusion element.

2 Set the test gas pressure regulators and the flow meter for a flow of 5 scfh at (20 psig) 138 kPa for both gases. The reference gas should be flowing as in normal operation.

3 Refer to paragraph 3-10d of this section for Manual (Semi-automatic) Calibration setup and procedure using the IFT.

4 Test gases will be switched on and off using the shutoff valves.

Test Method "B" Rosemount Oxygen Test Gas and Service Kit.

(a) Required Equipment

CAUTION

Do not use 100% nitrogen as a zero gas. It is suggested that gas for the zero be between 0.4% and 2.0% O_2. Do not use gases with hydrocarbon concentrations of more than 40 parts per million. Failure to use proper gases will result in erroneous readings.

1 Portable Rosemount Oxygen Test Gas Kits (Figure 3-3), Rosemount Part Number 6296A27G01, containing 8% and 0.4% gases in a portable carrying case with regulator, built-in valve, hose and hose connecting adapter to the calibration gas connection.

2 Extra gas bottles are available at:

Rosemount Analytical Inc.
Box 901
Orrville, Ohio 44667
U.S.A.

Rosemount Limited
Burymead Road
Hitchin, Herts. U.K.

Rosemount Italy
VIA Guido Cavalcanti 8
20127 Milan, Italy

Rosemount Spain
Saturnino Calleja 6
28002 Madrid, Spain

Rosemount France
165 Boulevard de Vallmy
92706, Colombes, France

Rosemount Part Number 3530B07G01 for probe 0.4% oxygen in nitrogen in disposable bottle.

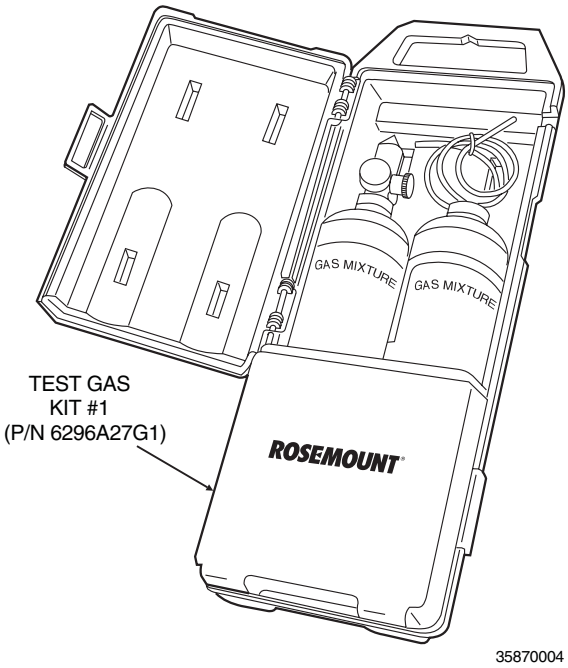

Figure 3-3. Portable Rosemount Oxygen Test Gas Kit

Rosemount Part Number 3530B07G02 for probe 8% oxygen in nitrogen in disposable bottle.

3 A check valve is required at the probe (between the calibration fitting and the gas line) to prevent the migration of process gases down the calibration gas line.

(b) Calibration with a Portable Rosemount Oxygen Test Gases Kit.

1 A typical portable test calibration setup is shown in Figure 3-4. For Manual (semiautomatic) calibration, remove cap plug from the calibrate-in-place fitting. The cap plug must be retained to seal this fitting after calibration is complete; failure to do so may render the probe useless if the system pressure is slightly negative. The reference gas should be flowing as in normal operation.

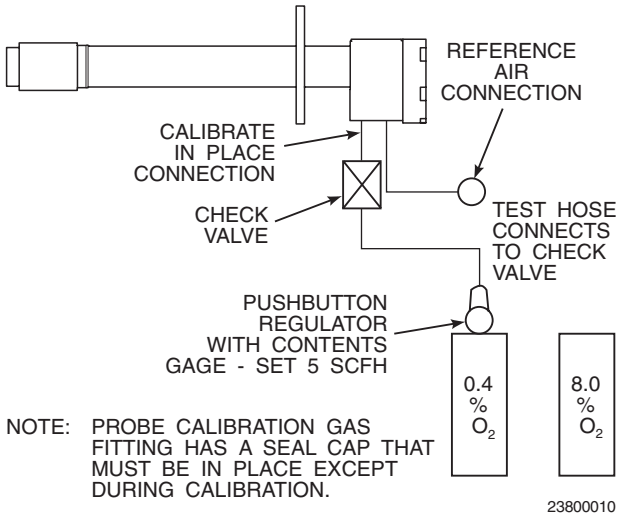

Figure 3-4. Typical Portable Test Calibration Setup

2 Refer to paragraph 3-10d of this section for Manual (Semiautomatic) Calibration setup and procedure using the IFT.

3 Screw the push button regulator with contents gage on to the test gas of choice and inject the test gas by opening the valve. Gas is on continuously when the valve is opened.

d. Manual (Semiautomatic) Calibration Procedure

WARNING

Consult Safety Data Sheet 1M03296 before performing any work on the CENELEC approved IFT 3000.

The following procedure relates to an operator initiated calibration selected at the IFT by pressing the CAL key. The calibration is manually performed by the operator upon data queues from the IFT. Any system without an MPS 3000 Multiprobe Test Gas Sequencer must follow these steps.

1. Press SETUP to display the SETUP menu. Select PROBE CALIBRATION sub-menu. Ensure that Auto Cal is disabled. Set the cursor on Auto Cal. Press ENTER. Set Auto Cal to NO if not already done.

2. Press the CAL key. Select PERFORM CALIBRATION sub-menu. "Press ENTER to start Manual Calibration" will appear on the LCD display. Press ENTER to start. Follow the data queues. Refer to Table 3-4. CALIBRATE O_2 Menu.

e. Fully Automatic Calibration

WARNING

Consult Safety Data Sheet 1M03296 before performing any work on the CENELEC approved IFT 3000.

1. Test Gases for Fully Automatic Calibration. For fully automatic calibration, an MPS 3000 Multiprobe Test Gas Sequencer is required as well as the two types of test gas.

CAUTION

Do not use 100% nitrogen as a zero gas. It is suggested that gas for the zero be between 0.4% and 2.0% O_2. Do not use gases with hydrocarbon concentrations of more than 40 parts per million. Failure to use proper gases will result in erroneous readings.

Two tanks of precision calibration gas mixtures. Recommended calibration gases are nominally 0.4 percent and 8.0 percent oxygen in nitrogen.

A typical automatic calibration system is shown in Figure 3-5.

2. Fully Automatic Calibration Setup. In order for the IFT system to calibrate automatically, the following parameters from the CALIBRATE sub-menu in the IFT have to be entered. Refer to Table 3-5. SETUP Sub-Menu.

   (a) Auto Cal YES/NO

   Set to YES

   (b) Output Tracks YES/NO

   Set as desired to configure analog output tracking.

   (c) Cal Intrvl XD XH

   Set the desired time between calibrations in number of days and hours. (1 year max.)

   (d) Next Cal. XD XH

   Displays the time left to the start of the next calibration. Set the desired time until the start of the next calibration. If nothing is entered here, the unit will automatically enter the cal intrvl and count down from that. (1 year max.)

   (e) Gas Time 0:00

   Set the amount of time for the test gasses to be turned on in number of minutes and seconds, allow enough time for signal values to stabilize.

   (f) Purge Time 0:00

   Set the amount of time for the gas lines to clear in number of minutes and seconds.

   (g) Abort Time 0:00

   Set the amount of time allowed between key functions before the calibration procedure is aborted in number of minutes and seconds.

   (h) Res Alarm _____

   Set the desired resistance alarm between 50 - 10000 ohms.

Once these parameters have been set, the system will initiate calibration without operator intervention as set by the CAL INTVL parameter.

3. Manually Initiated Fully Automatic Calibration Procedure. The following procedure relates to an operator initiated calibration, either by a remote switch (CAL INIT on interconnect board) or selected at the IFT by pressing the CAL key using an MPS 3000 Multiprobe Gas Sequencer.

(a) Press SETUP to display the SETUP sub-menu. Select Calibration. Ensure that Auto Cal is enabled. Set the cursor on Auto Cal. Press ENTER. Set Auto Cal to YES if not already done.

(b) Press the CAL key. Select Perform Calibration. "Press ENTER to start Automatic Calibration" will appear on the LCD display. Press ENTER to start. Refer to Table 3-4. CALIBRATE O_2 Sub-Menu.

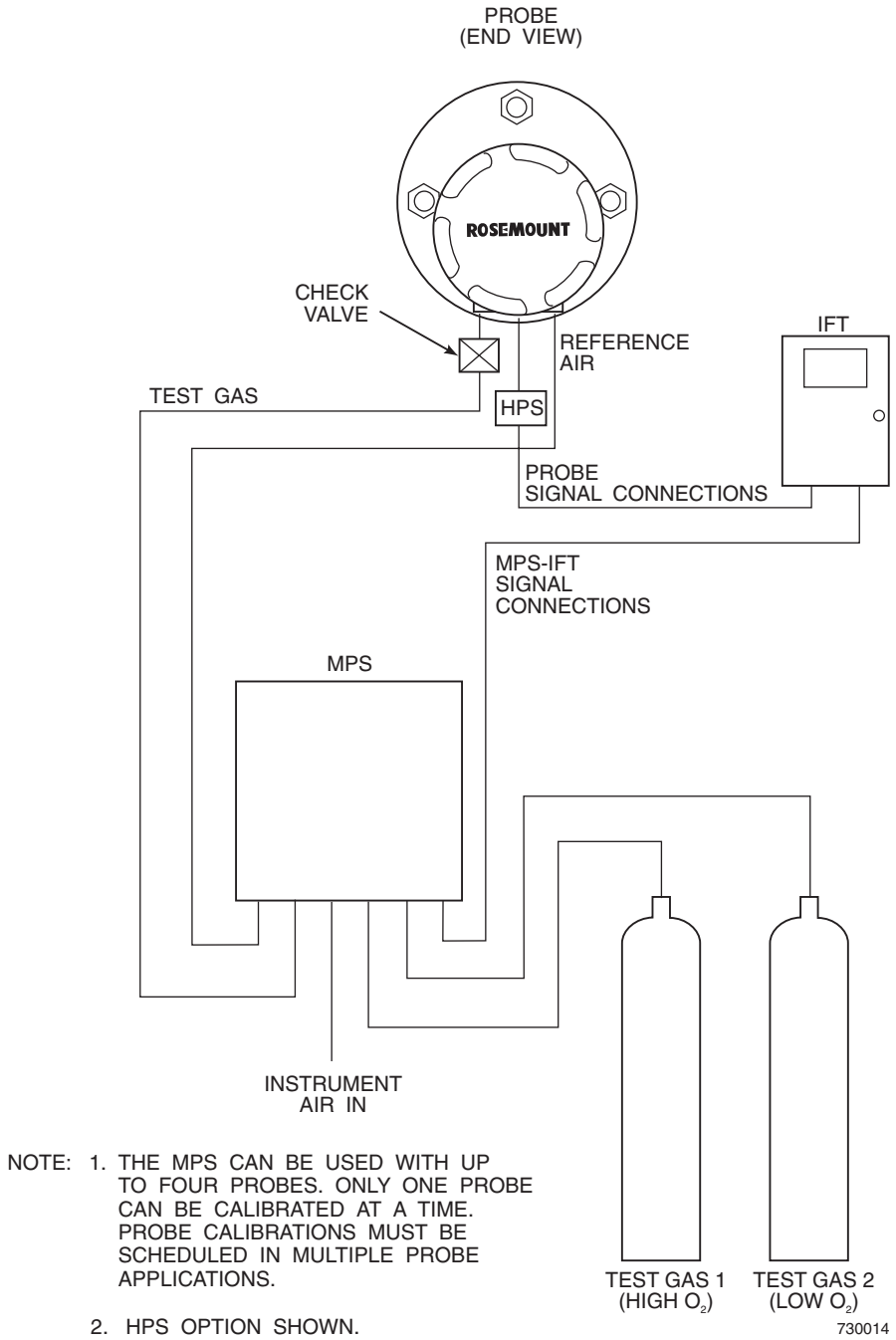

NOTE: 1. THE MPS CAN BE USED WITH UP TO FOUR PROBES. ONLY ONE PROBE CAN BE CALIBRATED AT A TIME. PROBE CALIBRATIONS MUST BE SCHEDULED IN MULTIPLE PROBE APPLICATIONS.

2. HPS OPTION SHOWN.

Figure 3-5. Typical Automatic Calibration System

SECTION 4
LDP OPERATION

WARNING

Consult Safety Data Sheet 1M03296 before performing any work on the CENELEC approved IFT 3000.

4-1 OVERVIEW

Ensure that the oxygen analyzer, heater power supply (if included with the system), and intelligent field transmitter have been properly connected. It is important to check that grounding and screening of terminations are correctly made to prevent the introduction of ground loops. The IFT is equipped with noise suppression circuitry on the power supply and signal input lines. Proper grounding at installation will ensure accuracy of function.

This section of the manual deals with operator controls and displays available for the IFT equipped with LDP and four membrane keys.

Operating instructions for the GUI equipped IFT are included in Section 3.

Any procedures not associated with normal operations are included in Section 2, Installation, or Section 5, Troubleshooting.

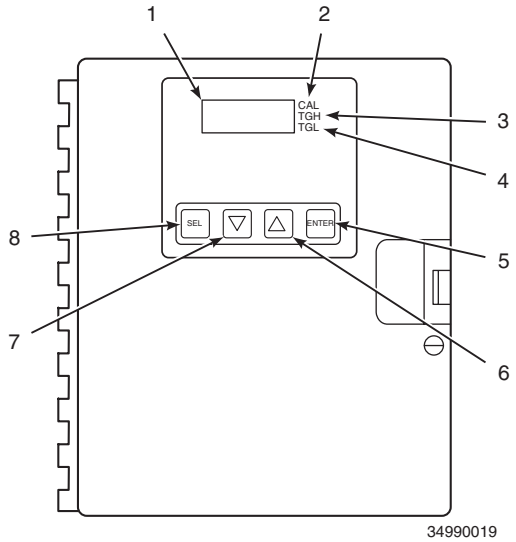

Figure 4-1. IFT with LDP Front Panel

4-2 IFT WITH LDP FRONT PANEL CONTROLS AND INDICATORS (Figure 4-1.)

Fig. 4-1 Index No.	Control/ LED	Description
1	LED Display	Indicates current O_2 or test gas value.
2	CAL	Calibration in progress indicator light.
3	TGH	High test gas indicator light. High test gas is being used in calibration process.
4	TGL	Low test gas indicator light. Low test gas is being used in calibration process.
5	ENTER	The ENTER key is used to initiate calibration or select a test gas parameter to change.
6	▲	The increase key is used to increase the value of the test gas parameters.
7	▼	The decrease key is used to decrease the value of the test gas parameters.
8	SEL	The select key is used to scroll through the list of parameters.

4-3 LDP DISPLAYS

WARNING

Consult Safety Data Sheet 1M03296 before performing any work on the CENELEC approved IFT 3000.

The LDP equipped IFT contains four selectable displays. The displays are selected by pressing the SEL key. The display is advanced once each time the SEL key is depressed and continually scrolls. The only parameters which the operator is permitted to change change are H (high test gas) and L (low test gas). When a parameter is to be changed, press the ENTER

key. To change the parameter, the increase and decrease arrows are depressed until the proper value is displayed. Depress the ENTER key to accept the new value, or the SEL key to abort the change. The four displays are as follows:

a. O_2

The O_2 selection will display the O_2 value on the LED display when ENTER key is depressed.

b. H

The high test gas display allows the value of the high test gas parameter to be changed for calibration purposes.

c. L

The low test gas display allows the value of the low test gas parameter to be changed for calibration purposes.

d. CAL

The calibration selection allows the operator to initiate the calibration process when ENTER key is depressed.

4-4 LDP DEFAULTS

The LDP equipped IFT is programmed at the factory with the defaults indicated in Table 4-1. For a description of the defaults refer to Table 3-4. SETUP Sub-Menu.

4-5 CALIBRATION

a. Overview

The LDP equipped IFT is configured at the factory for manual (semiautomatic) calibration. Calibration must be manually initiated. Information on test gases and hardware requirements may be found in paragraph 3-10, Calibration.

b. Manual Calibration

The following procedures relate to an operator initiated calibration. The calibration is manually performed by the operator upon data queues from the IFT. Any system without an MPS 3000 multiprobe test gas sequencer must follow these steps.

WARNING

Consult Safety Data Sheet 1M03296 before performing any work on the CENELEC approved IFT 3000.

1. Press the SEL key until CAL is shown on the LED display.
2. Press ENTER. The CAL light is now on. Turn on high test gas.
3. Press ENTER. The TGH light is now flashing.
4. When the value shown on the LED display has stabilized, press ENTER. Turn off high test gas.
5. Turn on low test gas. Press ENTER. The TGL light is now flashing.
6. When the value shown on the LED display has stabilized, press ENTER.
7. Turn off low test gas. Press ENTER.
8. All indicator lights are off. Calibration complete.

Table 4-1. LDP Defaults

PARAMETER	DEFAULT	PARAMETER	DEFAULT
Probe Calibration		Efficiency Calc.	
High Gas	8.0%	Enable Calc	NO
Low Gas	0.4%	K1 Value	0.0
Auto Cal	NO	K2 Value	0.0
Output Tracks	YES	K3 Value	0.0
Cal Interval	OFF		
Next Cal	Disabled	Relay Outputs (K1)	
Gas Time	5:00 MIN	Event 1	Heater Fail
Purge Time	5:00 MIN	Event 2	Cal. Fail
Resistance Alarm	1000 ohms	Event 3	INCAL
O_2 Calculation		Relay Outputs (2)	
Slope	____(value from calibration)	Event 1	LO O_2
Constant	____(value from calibration)	Event 2	OFF
Htr Set Point	736°C (when implemented)	Event 3	OFF
O_2 Alarms		Analog Output	
HI Alarm	30%	Source	O_2 0-10%
LO Alarm	0.3%	Aout Type	4-20mA
Alarm DB	0.0%		

SECTION 5
TROUBLESHOOTING

WARNING

Consult Safety Data Sheet 1M03296 before performing any work on the CENELEC approved IFT 3000.

WARNING

Install all protective equipment covers and safety ground leads after troubleshooting. Failure to install covers and ground leads could result in serious injury or death.

5-1 OVERVIEW

The system troubleshooting describes how to identify and isolate faults which may develop in the Oxygen Analyzer System. Refer to Probe, IFT, HPS, and MPS Appendices.

5-2 SPECIAL TROUBLESHOOTING NOTES

a. Grounding

It is essential that adequate grounding precautions are taken when the system is being installed. A very thorough check must be made at both the probe and electronics to ensure that the grounding quality has not degraded during fault finding. The system provides facilities for 100% effective grounding and the total elimination of ground loops.

b. Electrical Noise

The IFT has been designed to operate in the type of environment normally found in a boiler room or control room. Noise suppression circuits are employed on all field terminations and main inputs. When fault finding, the electrical noise being generated in the immediate circuitry of a faulty system should be evaluated. All cable shields must be connected to earth.

c. Loose Integrated Circuits

The IFT uses a microprocessor and supporting integrated circuits. Should the electronics unit receive rough handling during installation in a location where it is subjected to severe vibration, an Integrated Circuit (IC) could work loose. The fault finding guides in paragraph 5-3a. and Table E-2, Appendix EX, show the resulting variety of failure modes. It is recommended that all IC's be confirmed to be fully seated before troubleshooting on the system begins.

d. Electrostatic Discharge

Electrostatic discharge can damage the IC's used in the electronics unit. It is essential before removing or handling the processor board or the IC's used on it, that the user ensure he/she is at ground potential.

5-3 SYSTEM TROUBLESHOOTING

The IFT provides system failure information with two different error message formats. The error messages vary due to system configuration. Refer to Appendix EX, IFT 3000 Troubleshooting.

a. GUI Equipped IFT

The status line of the GUI equipped IFT will display one of ten conditions: OK, CAL (calibration), C Err (calibration error), H Err (heater error), TGLow (test gas low), HiO_2 (high O_2 level), LoO_2 (low O_2 level), and R Hi (high resistance level), Off and PRBE. Refer to Table E-2, Appendix EX for additional troubleshooting information on the GUI equipped IFT.

WARNING

Consult Safety Data Sheet 1M03296 before performing any work on the CENELEC approved IFT 3000.

1. OK - The system is operating normally.
2. CAL - The system is currently undergoing calibration.
3. C Err - An error was detected during the calibration process.
4. H Err - There is a fault within the heater system.
5. TGLow - There is no test gas pressure.
6. HiO_2 - The O_2 value is above the high alarm limit.
7. LoO_2 - The O_2 value is below the low alarm limit.
8. R Hi - The cell resistance is above the high limit.
9. Off - The probe has been turned off because the IFT cannot control the heater temperature.
10. PRBE - The probe is disconnected, cold, or leads are reversed.

SECTION 6
RETURN OF MATERIAL

6-1 If factory repair of defective equipment is required, proceed as follows:

a. Secure a return authorization number from a Rosemount Analytical Sales Office or Representative before returning the equipment. Equipment must be returned with complete identification in accordance with Rosemount instructions, or it will not be accepted.

In no event will Rosemount be responsible for equipment returned without proper authorization and identification.

b. Carefully pack defective unit in a sturdy box with sufficient shock absorbing material to insure that no additional damage will occur during shipping.

c. In a cover letter, describe completely:

1. The symptoms from which it was determined that the equipment is faulty.
2. The environment in which the equipment has been operating (housing, weather, vibration, dust, etc.).
3. The site from which equipment was removed.
4. Whether warranty or nonwarranty service is requested.
5. Complete shipping instructions for return of replacement or repaired equipment to you.
6. Reference the return authorization number.

d. Enclose a cover letter and purchase order and ship the defective equipment, according to instructions provided in Rosemount Return Authorization, prepaid, to:

Rosemount Analytical Inc.
RMR Department
1201 N. Main Street
Orrville, Ohio 44667

If warranty service is requested, the defective unit will be carefully inspected and tested at the factory. If failure was due to conditions listed in the standard Rosemount warranty, the defective unit will be repaired or replaced at Rosemount's option, and an operating unit will be returned to the customer in accordance with shipping instructions furnished in the cover letter.

For equipment no longer under warranty, the equipment will be repaired at the factory and returned as directed by your purchase order and shipping instructions.

SECTION 7
APPENDICES

APPENDIX AX. WORLD CLASS 3000 OXYGEN ANALYZER PROBE (CENELEC APPROVED VERSION)

APPENDIX BX. HPS 3000 HEATER POWER SUPPLY FIELD MODULE (CENELEC APPROVED VERSION)

APPENDIX DX. MPS 3000 MULTIPROBE TEST GAS SEQUENCER

APPENDIX EX. IFT 3000 INTELLIGENT FIELD TRANSMITTER

APPENDIX JX. HART COMMUNICATOR MODEL 275D9E IFT 3000 APPLICATIONS

NOTES:

1. SEE SAFETY DATA SHEET 1M03226 FOR A LIST OF PROBE REPAIRS A CUSTOMER MAY MAKE.
2. ITEM B, CALIBRATION GAS TUBE, FITS INTO HOLE A WHEN PROBE IS ASSEMBLED.
3. NOT ALL PARTS SHOWN ARE AVAILABLE FOR PURCHASE SEPARATELY. FOR A LIST OF AVAILABLE PARTS, SEE TABLE A-3.

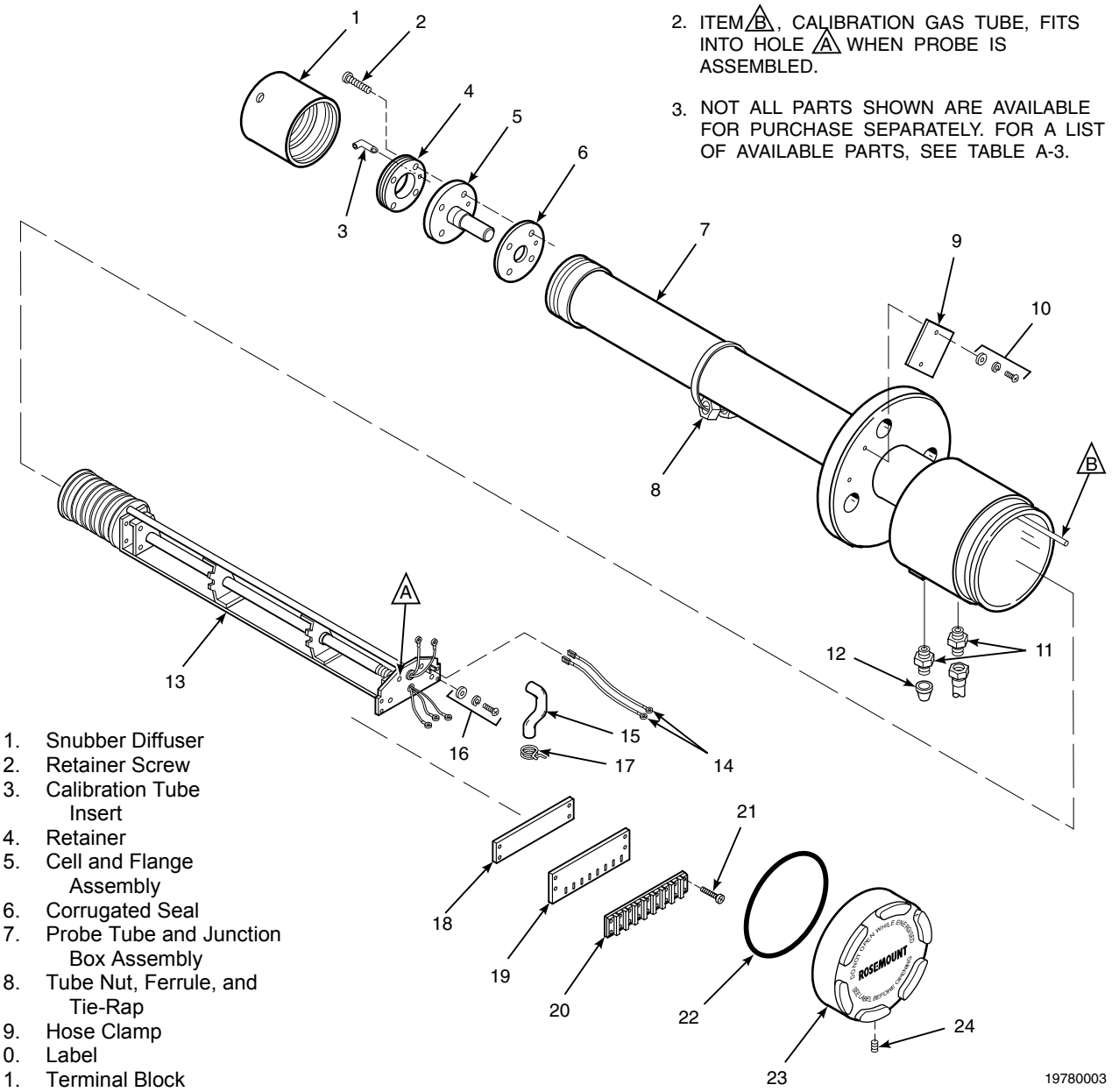

1. Snubber Diffuser
2. Retainer Screw
3. Calibration Tube Insert
4. Retainer
5. Cell and Flange Assembly
6. Corrugated Seal
7. Probe Tube and Junction Box Assembly
8. Tube Nut, Ferrule, and Tie-Rap
9. Hose Clamp
10. Label
11. Terminal Block
12. Label Attaching Hardware Mounting Plate
13. Gas Connection
14. Terminal Block Marker
15. Seal Cap
16. Terminal Block
17. V-Strut Assembly
18. Terminal Block Screw
19. Ground Wires
20. Junction Box Gasket
21. Hose
22. Junction Box Lid
23. Probe Head Hardware
24. Cover Setscrew

Figure A-1. Oxygen Analyzer (Probe - CENELEC Approved) Exploded View

APPENDIX AX, REV. 2.1
WORLD CLASS 3000 OXYGEN ANALYZER PROBE
(CENELEC APPROVED VERSION)

DESCRIPTION

WARNING

Consult Safety Data Sheet 1M03226 for probe safety related information.

A-1 OXYGEN ANALYZER (PROBE) – GENERAL

The CENELEC approved Oxygen Analyzer (Probe), Figure A-1 consists of three component groups (Figure A-2): probe exterior, inner probe, and probe head. Specifications for the CENELEC approved probe are contained in Table A-1.

A-2 PROBE ASSEMBLY EXTERIOR

Primary probe exterior components include a flange-mounted zirconium oxide cell, mounted on a tube assembly and protected by a flame arrestor and snubber diffuser.

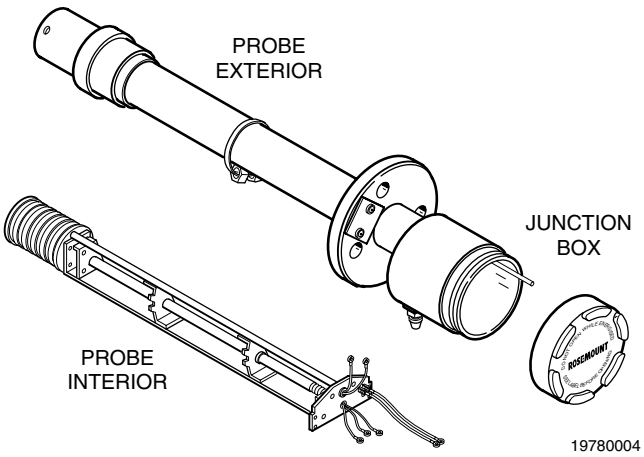

Figure A-2. Main Probe Components

a. Cell and Flange Assembly

The primary component in the cell and flange assembly, Figure A-3, is a yttria-stabilized zirconium oxide cell. It creates an electrical signal when the oxygen level on one side is out of balance with the oxygen level on the other side. This signal is proportional to the difference in oxygen levels.

b. Probe Tube Assembly

Screws and a retainer ring secure the cell and flange assembly, Figure A-3, to the probe tube assembly. When in place, the cell is inside the tube. The retainer ring is high temperature chrome plated to prevent galling and seizing. It is also coated with anti-seize compound to help avoid seizing.

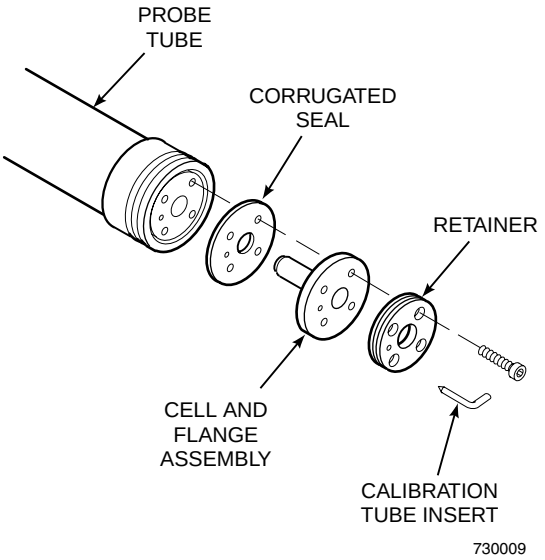

Figure A-3. Cell and Tube Assemblies

Table A-1. Specifications for Oxygen Analyzing Equipment [1, 2]

Probe lengths, nominal	457 mm (18 in.), 0,91 m (3 ft), 1,83 m (6 ft), depending on duct dimensions.
Temperature limits in process measurement area	10-704°C (50-1300°F)
Standard/current output	4-20 mA dc signal (factory set)
O_2 indication (Digital display and analog output)	0.1% O_2 or ±3% of reading, whichever is greater using Rosemount test gases.
Cell speed of response	1 millisecond
System speed of response	less than 3 seconds (amplifier output)
Resolution sensitivity	0.01% O_2 transmitted signal
Probe reference air flow	56,6 L/hr (2 scfh) clean, dry, instrument quality air (20.95% O_2)
Calibration gas mixtures	Rosemount Hagan Test Gas Kit Part No. 6296A27G01 contains 0.4% O_2N_2 Nominal and 8% O_2N_2 Nominal
Calibration gas flow	141,6 L/hr (5 scfh)
Probe heater power supply	44 Vac from HPS 3000
HPS 3000 power requirement	225 VA
Ambient operating temperature of probe junction box	0°-150°C (32°-302°F)
HPS 3000 ambient operating temperature	0°-50°C (32°-120°F)
Approximate shipping weights:	
457 mm (18 in.) package	30 kg (66 lbs)
0,91 m (3 ft) package	40 kg (88 lbs)
1,83 m (6 ft) package	55 kg (121 lbs)

[1] All static performance characteristics are with operating variables constant.
[2] Temperatures over 537°C (1000°F) may affect the ease of field cell replaceability.

The tube assembly includes a flange which mates with a stack-mounted flange. Studs on the stack flange make installation easy. There is also a tube to carry calibration gas from the probe head to the process side of the cell during calibration.

c. Flame Arrestor Diffuser

The flame arrestor diffuser, Figure A-4, protects the cell from heavy particles and isolates the cell from changes in temperature. The assembly consists of a flame arrestor and a snubber diffuser. The flame arrestor and diffuser thread onto the probe tube. Pin spanner wrenches (probe disassembly kit 1L03825G01) are applied to holes in the diffusion element hub to remove or install the diffuser assembly.

WARNING

The Flame Arrestor and Flame Arrestor Hub are among the critical components in this type of protection (Flameproof Enclosure Type 'D'). See Safety Data Sheet 1M03226.

Systems that use an abrasive shield require a special flame arrestor and diffuser assembly with a hub that is grooved to accept two dust seal gaskets.

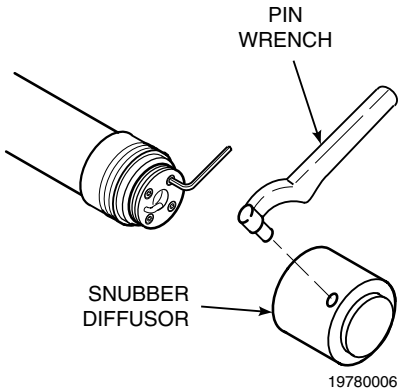

Figure A-4. Flame Arrestor Diffuser Assembly

d. Cell – General

The components which make up the cell are machined to close tolerances and assembled with care to provide accurate oxygen measurements. Any replacement requires attention to detail and care in assembly to provide good results.

WARNING

Failure to follow the instructions in this manual could cause danger to personnel and equipment. Read and follow instructions in this manual carefully.

The oxygen probe includes an inner electrode for the cell assembly. It consists of a platinum pad and a platinum/inconel composite wire which produces the cell constant offset voltage described in the Nernst equation.

With this pad and wire, the constant will be between -10 to +15 mV. The cell constant is noted in the calibration data sheet supplied with each probe.

Every probe should be calibrated and checked after repair or replacement of cell, pad and wire, heater, or thermocouple, or after disassembly of the probe.

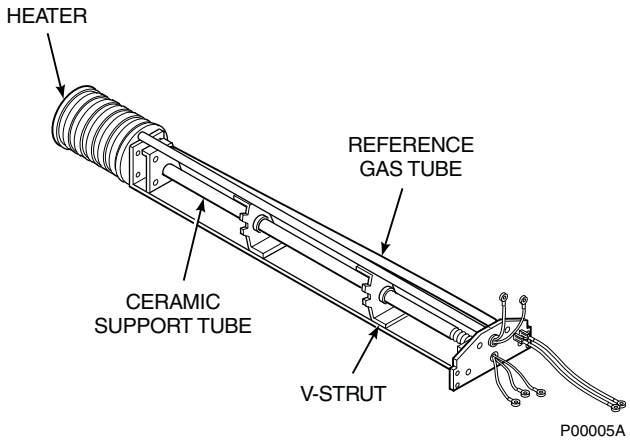

Figure A-5. Inner Probe Assembly

A-3 INNER PROBE ASSEMBLY

The inner probe assembly, Figure A-5, consists of six main parts:

a. Ceramic support rod with four holes running through the length. The holes serve as insulated paths for the cell signal wire and thermocouple wires.

b. A heater that is helically wrapped on a quartz support cylinder and insulated.

c. A chromel-alumel thermocouple which acts as the sensing element for the temperature controller. (Not visible in Figure A-4; located within ceramic support rod.)

d. A platinum screen pad which forms electrical contact with the inner electrode of the electrochemical cell. (Not visible in Figure A-5; located at end of ceramic support rod.) The pad is attached to an inconel wire which carries the signal to the terminal strip.

e. A V-strut assembly to give support to the inner probe assembly.

f. A tube to carry reference gas to the cell.

Turn to Maintenance and Service for repair procedures for probe components.

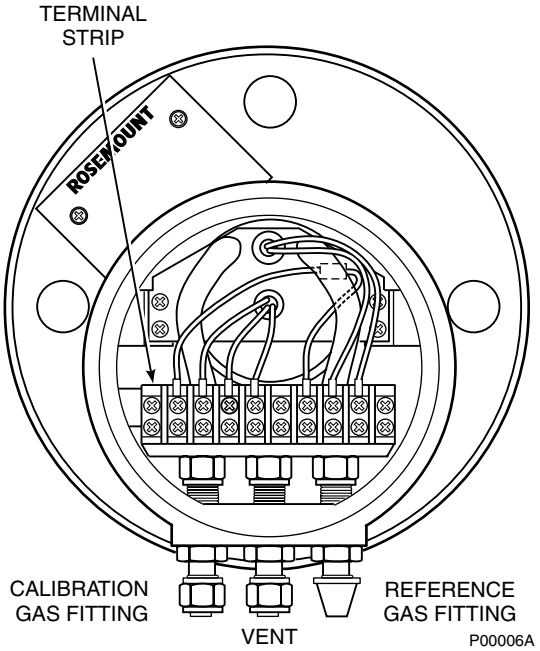

Figure A-6. Junction Box

A-4 JUNCTION BOX

The junction box, Figure A-6, is positioned at the external end of the probe and contains a terminal strip for electrical connections and fittings for reference and calibration gases. Fittings are for 0.250 inch stainless steel tubing. The calibration fitting has a seal cap which must remain in place except during calibration. A tubing fitting is also supplied to be used with the calibration gas supply during calibration.

If the calibration gas bottles will be permanently hooked up to the probe, an optional check valve is recommended to prevent condensation of flue gas in the calibration lines.

During operation and calibration, reference gas is supplied through the reference gas fitting to the reference side of the cell. This gives the system a known quantity of oxygen with which to compare the oxygen level in the process gas. Unlike the non-CENELEC World Class 3000 Probe, reference air must be used in conjunction with the CENELEC World Class 3000 probe.

During calibration, two gases of different known oxygen concentrations are injected one at a time through the calibration gas fitting. Stainless steel tubing delivers this gas to the process side of the cell. In a healthy cell, the difference in oxygen pressure from the process side to the reference side of the cell will cause a millivolt output proportional to the difference in oxygen levels. The electronics unit can use the two millivolt outputs caused by the two calibration gases for either automatic or semi-automatic calibration.

CAUTION

Do not attempt to remove a process gas sample through either gas fitting. Hot gases from the process would damage gas hoses in the probe head.

A-5 CABLE ASSEMBLY

Cable used to interconnect apparatus must conform to the applicable codes of practice in the country of installation (example: BS4345 in Great Britain). Rosemount can supply a cable (P/N 1U03066) which is fitted with EExd IIC barrier glands. The installer should note that on some earlier versions of the cable, the glands, although EExd IIC approved, are not of the barrier gland variety. These glands should not be used. Rosemount can supply a gland kit for the corresponding barrier gland (P/N 1U03066G07). Each kit contains one pair of glands. The Rosemount supplied cable is a 7 conductor cable to connect the probe to the HPS 3000, and to connect the HPS 3000 to the electronics package. Standard length for this cable is 6 m (20 ft), but lengths up to 45 m (150 ft) are available. The 7 conductors include 1 shielded pair of wires for the cell millivolt signal, 1 shielded pair of type K wires for the thermocouple, and 3 individual 16-gauge wires for the heater and for ground. All metal shields are isolated at the probe end and connect by drain wires to ground at the electronics. The cable is suitable for use in ambient temperatures up to 90°C (194°F).

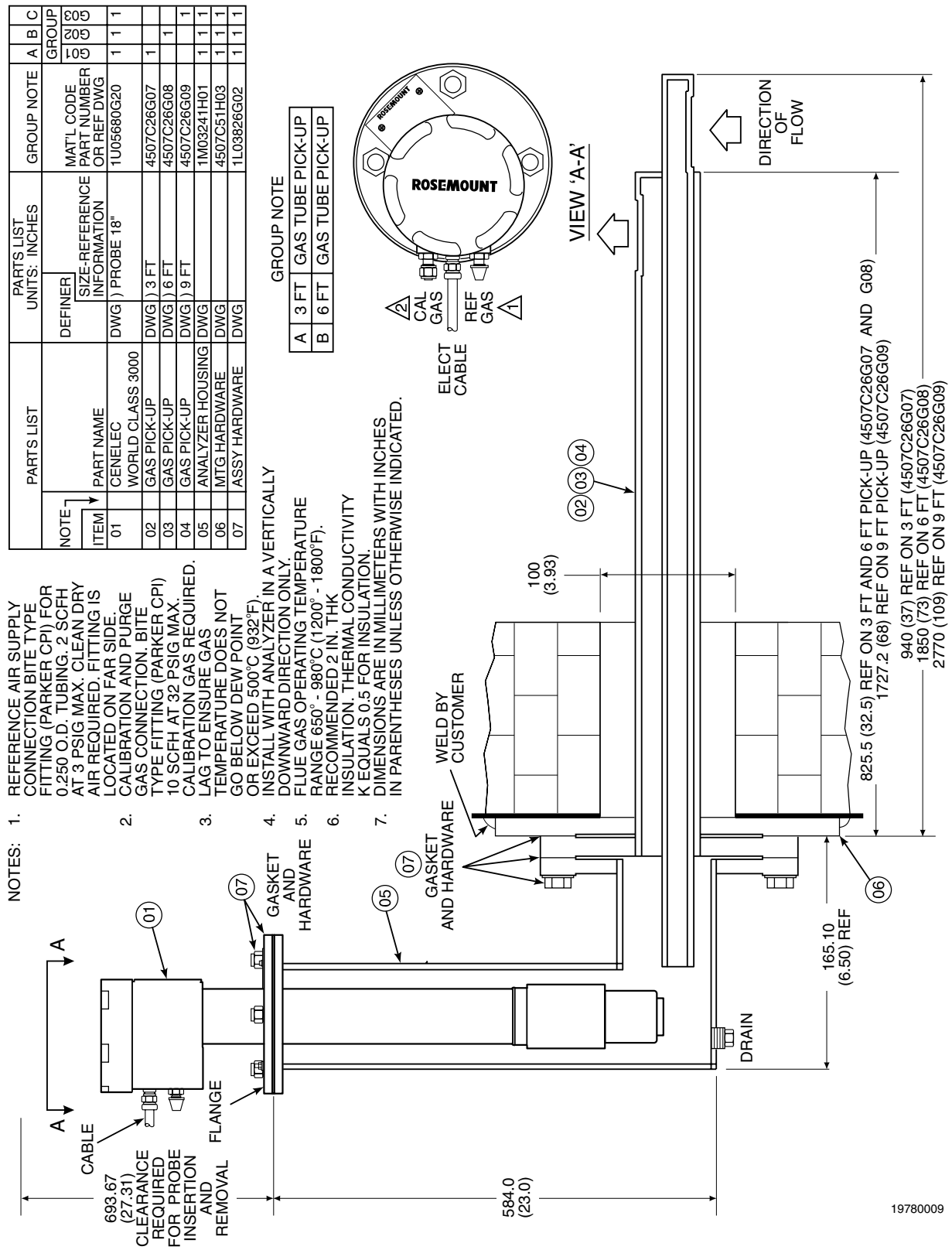

Figure A-7. Bypass Probe Option

A-6 PROBE OPTIONS

a. Abrasive Shield Assembly

The abrasive shield assembly (IB-106-300NX Series, Figure 2-1) is a stainless-steel tube that surrounds the probe assembly. The shield protects the probe against particle abrasion and corrosive condensations, provides a guide for ease of insertion, and acts as a probe position support, especially for longer length probes. The abrasive shield assembly uses a modified flame arrestor and diffuser filled with dual dust seal packing.

b. Bypass Probe Options

For processes where the flue gas exceeds the maximum allowable temperature of 704°C (1300°F) a bypass sensor package can be employed. The bypass system uses an 18 inch probe mounted externally on the stack or duct. The process or exhaust gases are directed out to the probe through an extension/return duct. The bypass arrangement does not require the use of aspiration air and the gas which flows past the probe is returned to the stack or duct.

The bypass probe package is normally used for process temperatures of 704°C (1300°F) to 980°C (1800°F). "Inconel 600" has an operating range up to 980°C (1800°F).

Overall dimensions and mounting details of the bypass system are shown in Figure A-7.

TROUBLESHOOTING

WARNING

Before conducting any work on the probe, consult probe Safety Data Sheet 1M03226.

WARNING

Install all protective equipment covers and safety ground leads after troubleshooting. Failure to replace covers and ground leads could result in serious injury or death.

A-7 OVERVIEW

The probe troubleshooting section describes how to identify and isolate operating faults which may develop in the probe assembly.

A-8 PROBE TROUBLESHOOTING

a. Probe Faults

The three symptoms of probe failure are:

1. The system does not respond to changes in the oxygen concentration.
2. The system responds to oxygen changes but does not give the correct indication.
3. The system does not give an acceptable indication of the value of the oxygen test gas being applied during calibration.

b. Table A-2 provides a guide to fault finding for the above symptoms.

c. Figure A-8 and Figure A-9 provide an alternate approach to finding probe related problems.

Table A-2. Fault Finding

SYMPTOM	CHECK	FAULT	REMEDY
1. No response to oxygen concentration change when:			
Heater is cold and TC mV output is less than setpoint.	Thermocouple continuity	Thermocouple failure	Replace thermocouple or return probe to Rosemount.
	Heater cold resistance to be 11 ohm - 14 ohm	Heater failure	Replace heater or return probe to Rosemount.
	Triac O/P to heater	Failure of electronics	Check HPS and electronics package.
Heater is hot and T/C mV output is at setpoint ±0.2 mV.	Recorder chart	Recorder failure	See Recorder Instruction Manual.
	Cell mV input to electronics and cell mV at probe junction box	No cell mV at probe when test gas applied	Replace cell or return probe to Rosemount.
		Probe cell mV OK but no input to electronics	Check out cable connection.
		Cell mV satisfactory both at probe junction box and input to electronics - failure of electronics	Check electronics package.
2. System responds to oxygen concentration changes but does not give correct indication.			
Good response, with incorrect indication.	Recorder or remote indicator	Calibration error	Recalibrate recorder or indicator, reference Recorder Instruction Manual.
	System calibration	Calibration error	Recalibrate system.
	Probe mounting and condition of duct	Air ingress into duct	Stop air leaks or resite probe.
	Cell mV input to electronics	Failure of electronics	Check electronics package.
3. Probe does not give accurate indication of applied test gas.	Test gas input port	Blocked port	Clean port.
	Ceramic diffusion element	Diffusion element cracked, broken, or missing	Replace diffusion element.

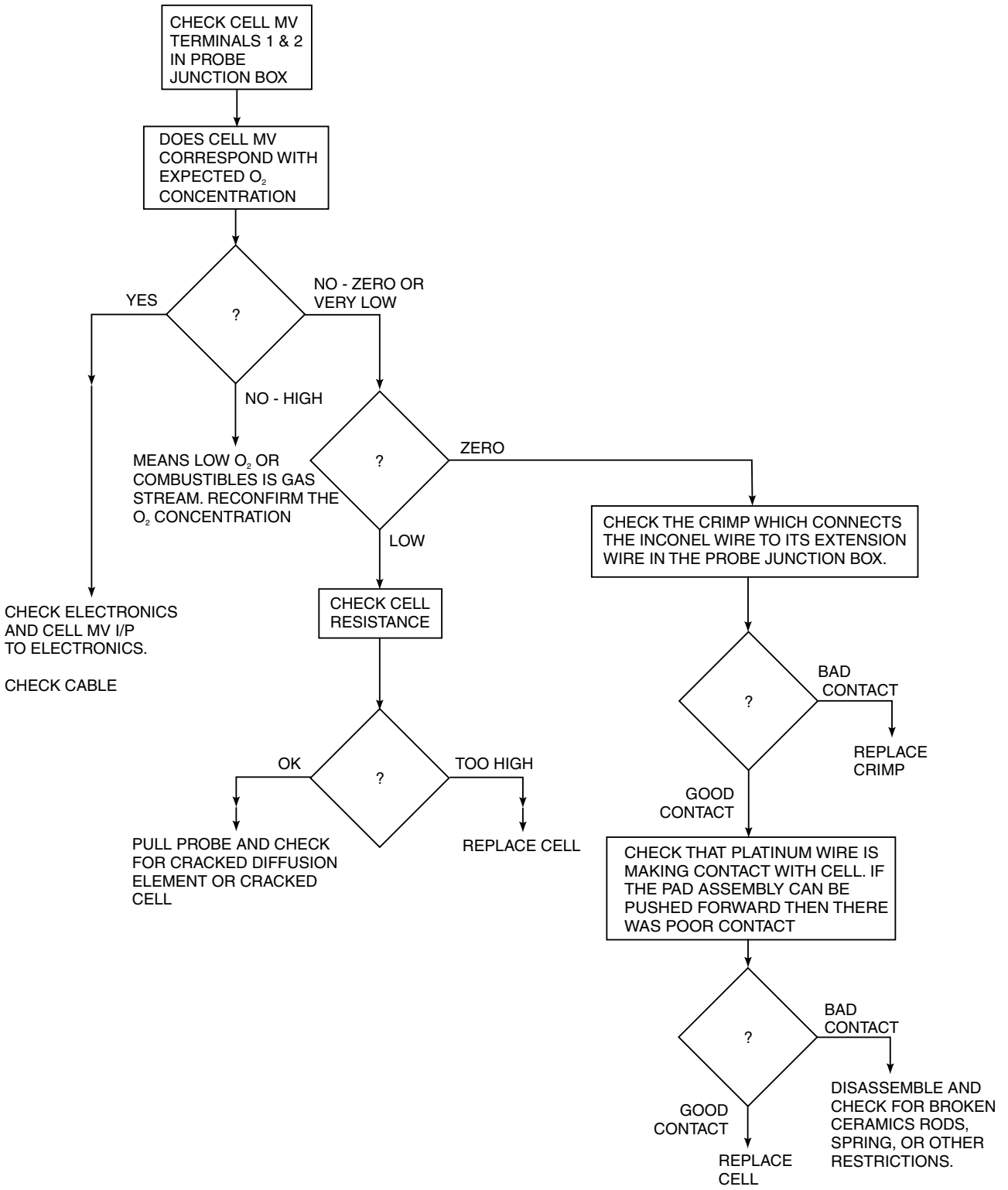

Figure A-8. Flowchart of Probe Related Problems, #1

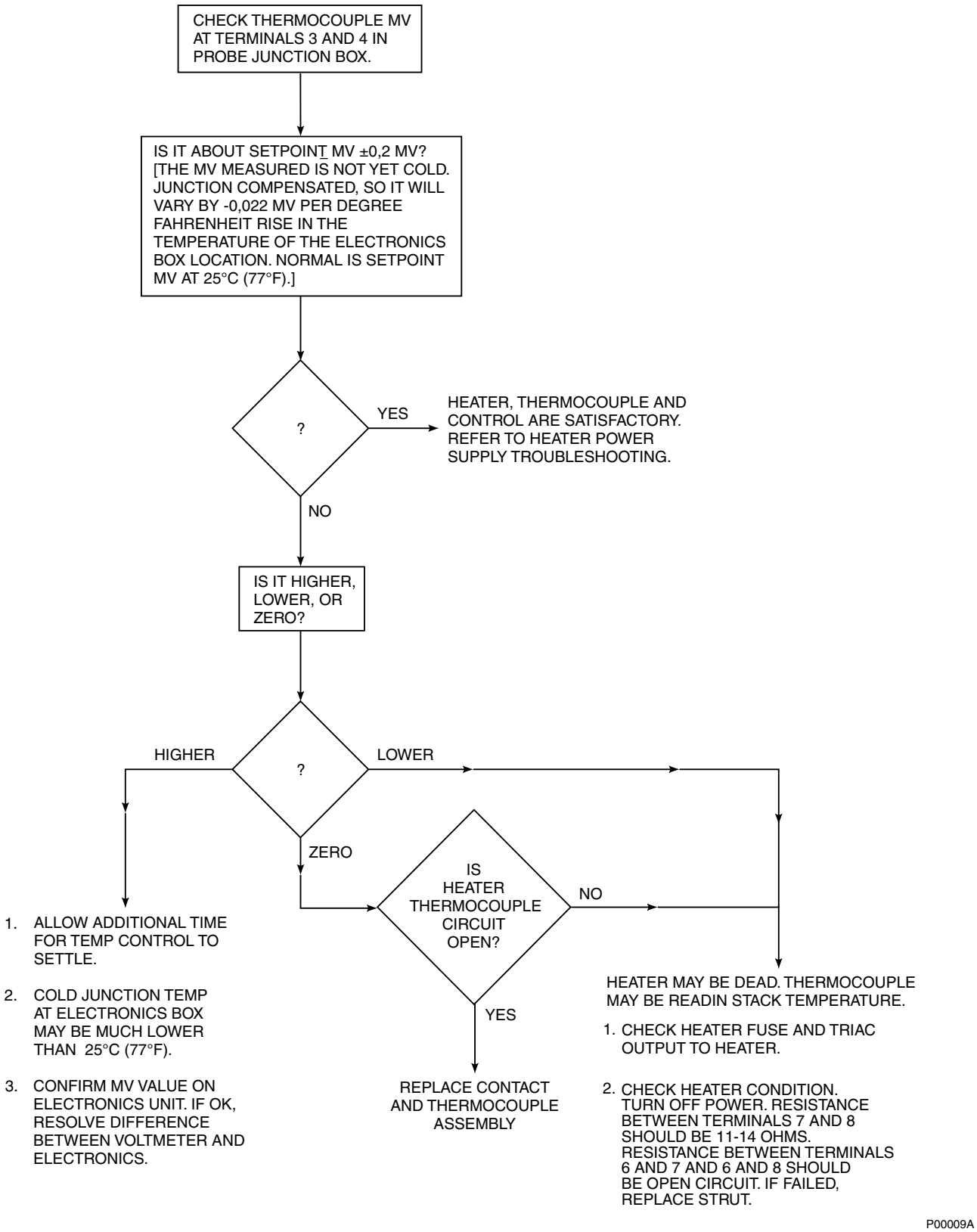

Figure A-9. Flowchart of Probe Related Problems, #2

MAINTENANCE AND SERVICE

NOTE

Upon completing installation, make sure that the probe is turned on and operating prior to firing up the combustion process. Damage can result from having a cold probe exposed to the process gases.

During outages, and if possible, leave all probes running to prevent condensation and premature aging from thermal cycling.

CAUTION

If the ducts will be washed down during outage, MAKE SURE to power down the probes and remove them from the wash area.

WARNING

Before carrying out any service or maintenance on the probe, consult Safety Data Sheet 1M03226.

When working on this equipment on the laboratory bench, be aware that the probe, probe tube, and flame arrestor hub can be hot [up to 370°C (698°F)] in the region of the probe heater.

WARNING

Install all protective equipment covers and safety ground leads after equipment repair or service. Failure to install covers and ground leads could result in serious injury or death.

A-9 OVERVIEW

This section describes routine maintenance of the oxygen analyzer probe. Spare parts referred to are available from Rosemount. Probe disassembly kit 1LO3825G01 contains the required spanner and hex wrenches. Refer to Replacement Parts of this appendix for part numbers and ordering information.

A-10 PROBE RECALIBRATION

The oxygen analyzer system should be calibrated when commissioned. Under normal circumstances the probe will not require frequent calibration. When calibration is required, follow the procedure described in the Instruction Bulletin applicable to your electronics package.

A-11 CELL REPLACEMENT

This paragraph covers oxygen sensing cell replacement. Do not attempt to replace the cell until all other possibilities for poor performance have been considered. If cell replacement is needed, order cell replacement kit, Table A-3.

The cell replacement kit contains a cell and flange assembly, corrugated seal, calibration tube insert, setscrews, socket head cap screws, and anti-seize compound. Items are carefully packaged to preserve precise surface finishes. Do not remove items from packaging until they are ready to be used. Spanner wrenches and hex wrenches needed for this procedure are part of an available special tools kit, Table A-3.

WARNING

Before carrying out this procedure, consult Safety Data Sheet 1M03226.

Wear heat resistant gloves and clothing to remove probe from stack. Normal operating temperatures of diffuser and vee deflector are approximately 316° to 427°C (600° to 800°F). They could cause severe burns.

CAUTION

Do not remove cell unless it is certain that replacement is needed. Removal may damage cell and platinum pad. Go through complete troubleshooting procedure to make sure cell needs replacement before removing it.

a. Follow the power down procedure outlined in Safety Data Sheet 1M03226 and the official "Codes of Practice" for your country of installation. Shut off and disconnect reference gas and calibration gas supplies from probe junction box, Figure A-10. Wearing heat resistant gloves and clothing, remove probe assembly from stack carefully and allow to cool to room temperature. Do not attempt to work on unit until it has cooled to a comfortable working temperature.

b. The vee deflector is an option used with the ceramic diffuser. Figure A-11 shows a probe with a snubber diffuser. If the probe has the vee deflector, remove vee deflector and hub setscrews and remove vee deflector. Use spanner wrenches from probe disassembly tools kit, Table A-3, to turn hub free from probe tube. If applicable, inspect optional ceramic diffusion element. If damaged, replace element.

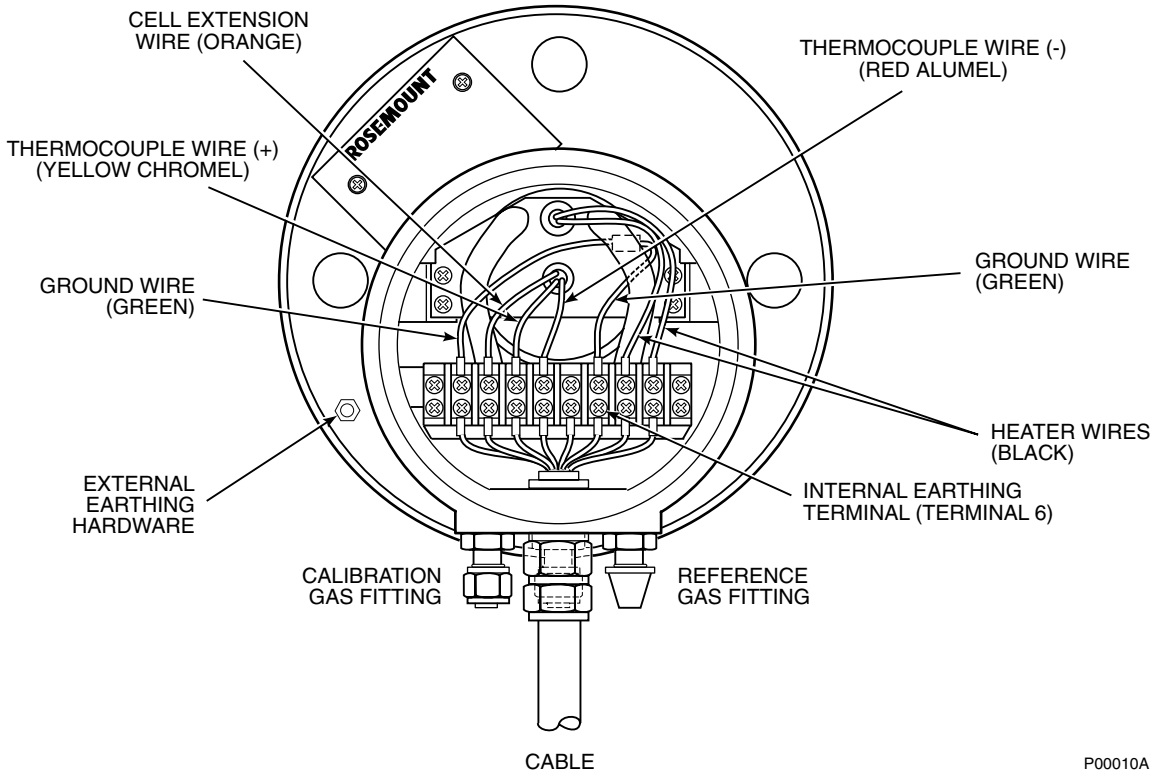

Figure A-10. Cell Wiring Installation

c. Loosen 4 socket head screws from retainer. Pull off retainer and calibration tube insert, Figure A-12. Discard calibration tube insert.

d. Press the cell flange against the probe end flange and twist through 90° in both the clockwise and counterclockwise directions. This breaks the bond between the cell and the platinum pad. Once the bond is broken, remove the cell.

e. View the platinum pad through the probe end flange. Reform the platinum pad into a shape to match the cell electrode by gathering in any loose strands which may have become untidy. This may be done with a small flat screwdriver.

f. Remove and discard corrugated seal. Clean mating faces of probe tube and retainer. Remove burrs and raised surfaces with block of wood and crocus cloth.

g. Rub one or two drops of anti-seize compound #3535B53G01 between fingers. Smear on both sides of corrugated seal.

h. Install new calibration tube insert in retainer, with the short arm of the tube insert penetrating the calibration gas passage in the outer ring of the retainer. Assemble retainer, cell and flange assembly, corrugated seal, and probe tube. Make sure the calibration tube insert lines up with the calibration gas passage in each component. Firmly seat the calibration tube insert in the assembly. Apply a small amount of anti-seize compound to screw threads and use screws to secure assembly. Torque to 4 N·m (55 in-lbs).

i. To install snubber diffuser, apply anti-seize compound to threads of probe tube, Figure A-11, and snubber diffuser. Reinstall diffuser on probe tube. Using pin spanner wrenches, torque to 14 N·m (10 ft-lbs).

j. If using the optional vee deflector and ceramic hub, apply anti-seize compound to threads of probe end flange, hub, and setscrews. Reinstall hub on probe tube. Using pin spanner wrenches, torque to 14 N·m (10 ft-lbs). Reinstall vee deflector, orienting apex toward gas flow. Secure with setscrews and anti-seize compound. Torque to 2.8 N·m (25-in-lbs). Secure hub retaining setscrew.

k. On systems equipped with an abrasive shield, install dust seal gaskets, with joints 180° apart.

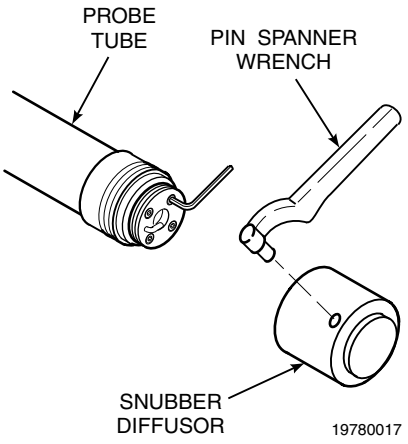

Figure A-11. Removal of Snubber Diffuser

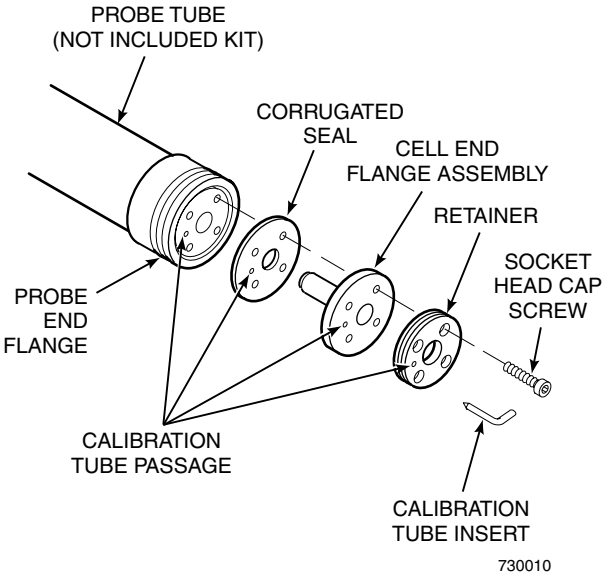

Figure A-12. Cell Replacement Kit

l. Reinstall probe and gasket on stack flange. If there is an abrasive shield in the stack, make sure dust seal gaskets are in place as they enter 15° reducing cone.

m. Consult Safety Data Sheet 1M03226 then turn power on to electronics and monitor thermocouple output. It should stabilize at 29.3 mV ±0.2 mV. Set reference air flow at 56.6 L/hr (2 scfh). After probe stabilizes, calibrate probe per Instruction Bulletin applicable to your electronics package. If new components have been installed, repeat calibration after 24 hours of operation.

A-12 CERAMIC DIFFUSION ELEMENT REPLACEMENT

NOTE

This refers to ceramic diffuser element only.

a. General

The diffusion element protects the cell from particles in process gases. It does not normally need to be replaced because the vee deflector protects it from particulate erosion. In severe environments, the filter may be broken or subject to excessive erosion. Examine the ceramic diffusion element whenever removing the probe for any purpose. Replace if damaged.

Damage to the ceramic diffusion element may become apparent during calibration. Compare probe response with previous response. A broken diffusion element will cause a slower response to calibration gas.

Hex wrenches needed to remove setscrews and socket head screws in the following procedure are available as part of a Probe Disassembly Kit, Table A-3.

WARNING

Wear heat resistant gloves and clothing to remove probe from stack. Normal operating temperatures of diffuser and vee deflector are approximately 316° to 427°C (600° to 800°F). They can cause severe burns.

Before carrying out this procedure, consult Safety Data Sheet 1M03226.

CAUTION

Do not remove cell unless it is certain that replacement is necessary. Cell cannot be removed for inspection without damaging it.

b. Replacement Procedure

1. Follow the power down procedure outlined in Safety Data Sheet 1M03226 and the official "Codes of Practice" for your country of installation. Disconnect cable conductors and remove cable, Figure A-10. Shut off and disconnect reference gas and calibration gas supplies from probe junction box. Wearing heat resistant gloves and clothing, carefully remove probe assembly from stack.

2. Loosen setscrews, Figure A-13, using hex wrench from Probe Disassembly Kit, Table A-3 and remove vee deflector. Inspect setscrews. If damaged, replace with stainless setscrews coated with anti-seize compound.

3. On systems equipped with abrasive shield, remove dual dust seal gaskets.

4. Use spanner wrenches from Probe Disassembly Kit, Table A-3, to turn hub free from retainer.

5. Put hub in vise. Break out old ceramic diffusion element with chisel along cement line and 9.5 mm (3/8 in.) pin punch through cement port.

6. Break out remaining ceramic diffusion element by tapping lightly around hub with hammer. Clean grooves with pointed tool if necessary.

7. Replace ceramic diffusion element, using replacement kit in Table A-3. This consists of a diffusion element, cement, setscrews, anti-seize compound and instructions.

8. Test fit replacement ceramic diffusion element to be sure seat is clean.

CAUTION

Do not get cement on ceramic diffusion element except where it touches the hub. Any cement on ceramic diffusion element blocks airflow through element. Wiping wet cement off of ceramic only forces cement into pores. Also do not get any cement onto the flame arrestor element.

9. Thoroughly mix cement and insert tip of squeeze bottle into cement port. Tilt bottle and squeeze while simultaneously turning ceramic diffusion element into seat. Do not get any cement on upper part of ceramic diffusion element. Ensure complete penetration of cement around 3 grooves in hub. Cement should extrude from opposite hole. Wipe excess material back into holes and wipe top fillet of cement to form a uniform fillet. (A Q-Tip is useful for this.) Clean any excess cement from hub with water.

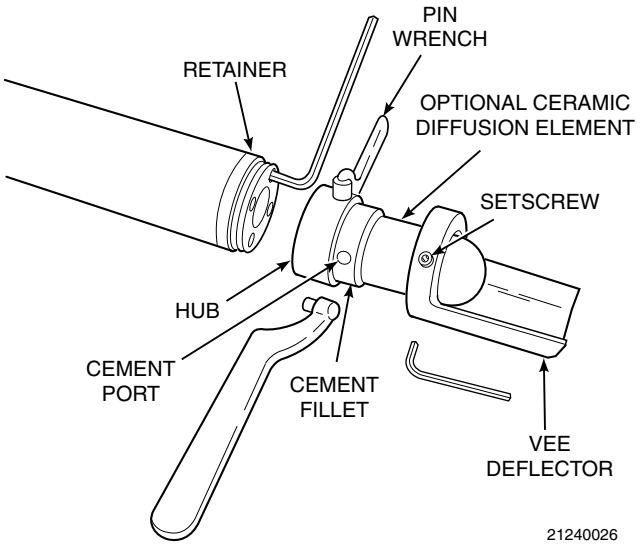

Figure A-13. Removal of Optional Ceramic Diffuser and Vee Deflector

10. Allow filter to dry at room temperature overnight or 1 to 2 hours at 93°C (200°F).

11. Wipe a heavy layer of anti-seize compound onto the threads and mating surfaces of the flame arrestor, diffusion hub, and probe tube.

12. Assemble flame arrestor and diffusion hub with two pin spanner wrenches. Torque to 14 N·m (10 ft-lbs). Secure with hub retaining setscrew.

13. On systems equipped with abrasive shield, install dust seal gaskets with joints 180° apart.

14. Reinstall vee deflector, orienting apex toward gas flow. Apply anti-seize compound to setscrews and tighten with hex wrench.

15. Reinstall probe on stack flange.

16. Consult Safety Data Sheet 1M03226 then turn power on to electronics and monitor thermocouple output. It should stabilize at 29.3 mV ±0.2 mV. Calibrate probe per Instruction Bulletin applicable to your electronics package.

A-13 REPLACEMENT OF CONTACT AND THERMOCOUPLE ASSEMBLY

WARNING

Use heat resistant gloves and clothing when removing probe junction box and inner probe assembly. Do not attempt to work on these components until they have cooled to room temperature. Probe components can be as hot as 800°C (1500°F). This can cause severe burns.

Before carrying this procedure, consult Safety Data Sheet 1M03226.

a. Follow the cell removal procedure in paragraph A-3, steps a, b, c, and d. Using heat resistant gloves and clothing, remove cover setscrew (24, Figure A-1) and junction box lid (23). Squeezing tabs on hose clamps, remove hoses from inner probe assembly, Figure A-14. Remove 4 screws which secure the inner probe assembly to the junction box. Disconnect all inner probe assembly wires from the terminal block (Figure A-10). Pull inner probe assembly free from junction box. Set on bench and allow to cool to room temperature.

b. Use a pencil to mark locations of spring clips on ceramic rod, Figure A-15.

c. Pry or squeeze tabs on spring clips, and pull contact and thermocouple assembly out of probe assembly. Retain spring clips and spring; replace if damaged.

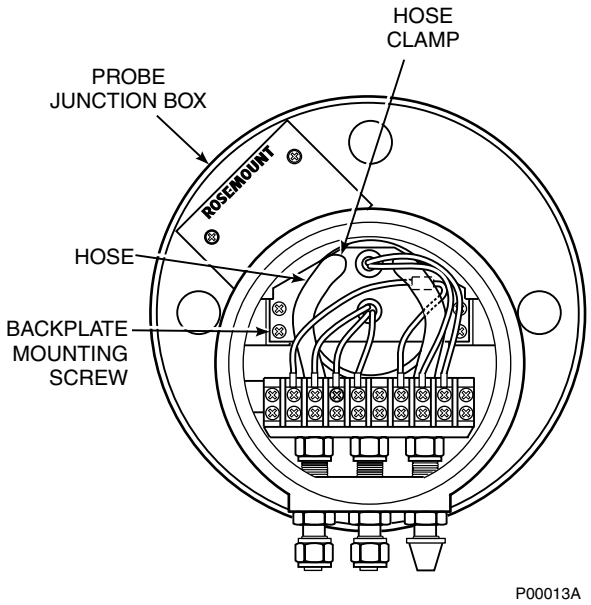

Figure A-14 Probe Junction Box Mechanical Connections

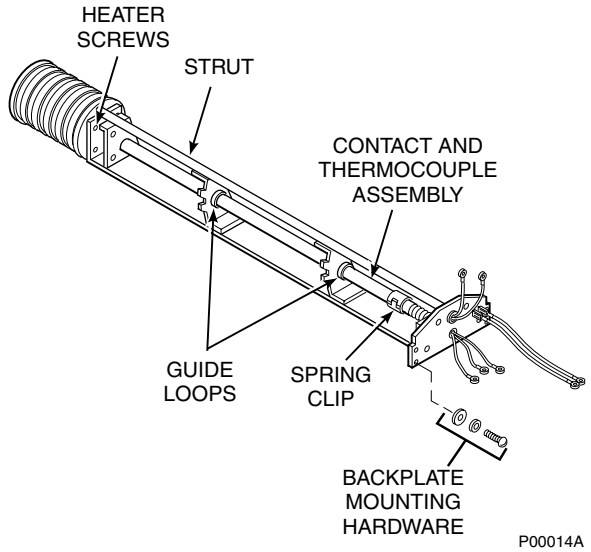

Figure A-15. Inner Probe Replacement (Heater, V-Strut, and Backplate Assembly)

CAUTION

Be very careful when handling contact and thermocouple assembly. The ceramic rod in this assembly is fragile.

d. While very carefully handling new contact and thermocouple assembly, lay old assembly next to new one. Transfer pencil marks to new rod. Throw away old contact and thermocouple assembly.

e. Carefully guide new contact and thermocouple assembly through V-strut assembly leaf spring (3, Figure A-16), spring (8), spring clips (9) (held open by squeezing tabs), tube supports and heater support until spring clip reaches pencil mark.

f. Slide assembled inner probe assembly into junction box and probe tube. To align calibration gas tube with corresponding hole in backplate (A, B, Figure A-1) insert scriber through hole in backplate and into calibration gas tube. Secure with screws. Reinstall hoses.

NOTE

The letter "A" is stamped inside the junction box close to the calibration tube. The calibration tube may fall over towards the opposite side. If it has, bring it back towards the letter "A" before inserting the inner probe assembly. Also note that there are grooves cut in the heater plates that fit over the calibration gas tube. Insert inner probe assembly gently to avoid kinking the calibration gas tube.

g. Connect color-coded wires to proper terminals as shown in Figure A-10. Rosemount recommends connecting the thermocouple wires directly to the terminal strip. This is because the junction of different metals at the wires and lugs and at the lugs and the terminal strip could act as additional thermocouple junctions. This could produce a voltage that would affect the thermocouple output signal.

Do not bend wires closer than 6.4 mm (1/4 in.) from end of ceramic rod. Dress wires so they do not touch sides of probe junction box.

h. Reinstall the cell per paragraph A-11, steps f, g, h, i, j, and k.

i. Consult Safety Data Sheet 1M03226 then power up system. Monitor thermocouple output. It should stabilize at setpoint mV ±0.2 mV. Recalibrate probe per Instruction Bulletin applicable to your electronics package.

A-14 REPLACEMENT OF HEATER, V-STRUT AND BACKPLATE ASSEMBLY (Inner Probe Assembly; Includes Contact and Thermocouple Assembly)

Figure A-17 is a cross-sectional view of the CENELEC approved oxygen analyzer (probe). Use Figure A-17 and the following procedure to replace heater, v-strut, and backplate assembly.

WARNING

Before carrying out this procedure, consult Safety Data Sheet 1M03226.

Use heat resistant gloves and clothing when removing probe junction box and inner probe assembly. Do not attempt to work on these components until they have cooled to room temperature. Probe components can be as hot as 800°C (1500°F). This can cause severe burns.

a. Follow the cell removal procedure in paragraph A-3, steps a, b, c, and d. Using heat resistant gloves and clothing, remove cover setscrew (24, Figure A-1) and junction box lid (23). Squeezing tabs on hose clamps, remove hoses from inner probe assembly, Figure A-13. Remove 4 screws which secure the inner probe assembly to the junction box. Disconnect all inner probe assembly wires from the terminal block (Figure A-10). Pull inner probe assembly free from junction box. Set on bench and allow to cool to room temperature.

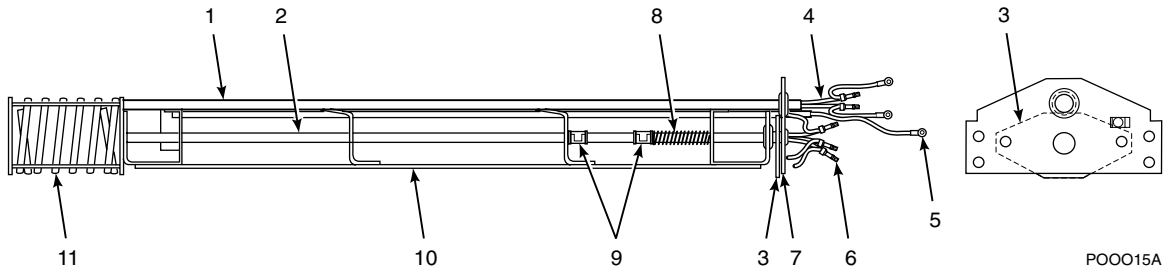

1. Heater Ceramic Rod
2. Contact and Thermocouple Assembly
3. Leaf Spring
4. Extension Wire
5. Ring Lug
6. Connector
7. Backplate
8. Spring
9. Spring Clip
10. Strut
11. Heater

Figure A-16. Heater, Strut, and Backplate Assembly (Inner Probe Assembly)

NOTE

Not all parts shown are available for purchase separately. For a list of available parts, see Table A-3.

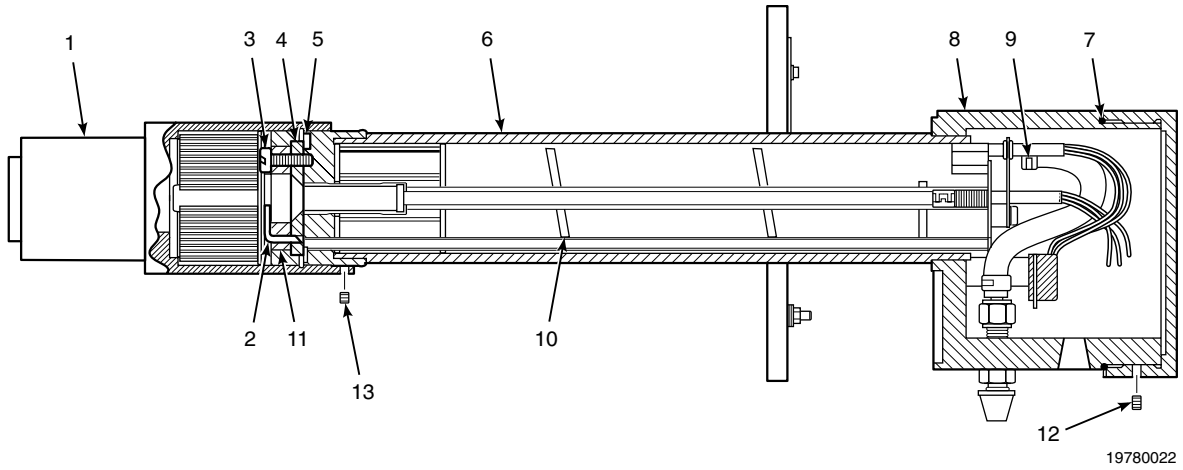

1. Snubber Diffuser
2. Calibration Tube Insert
3. Socket Head Cap Screw 0.25 In.-28 x 0.63 (16 mm)
4. Cell and Flange Assembly
5. Corrugated Seal
6. Probe Tube Assembly
7. Gasket
8. Cover Head Assembly
9. Hose Clamp
10. Heater Strut
11. Retainer
12. Junction Box Setscrew
13. Flame Arrestor Hub Setscrew

Figure A-17. Oxygen Analyzer (Probe), Cross-Sectional View

b. Slide new assembled inner probe assembly into junction box and probe tube. To align calibration gas tube with corresponding hole in backplate (A, B, Figure A-1), insert scriber through hole in backplate and into calibration gas tube. Secure with screws. Reinstall hoses.

NOTE

The letter "A" is stamped inside the junction box close to the calibration tube. The calibration tube may fall over towards the opposite side. If it has, bring it back towards the letter "A" before inserting the inner probe assembly. Also note that there are grooves cut in the heater plates that fit over the calibration gas tube. Insert inner probe assembly gently to avoid kinking the calibration gas tube.

c. Connect color-coded wires to proper terminals as shown in Figure A-10. Rosemount recommends connecting the thermocouple wires directly to the terminal strip. This is because the junction of different metals at the wires and lugs and at the lugs and the terminal strip could act as additional thermocouple junctions. This could produce a voltage that would affect the thermocouple output signal.

Do not bend wires closer than 6.4 mm (1/4 in.) from end of ceramic rod. Dress wires so they do not touch sides of probe junction box.

d. Reinstall the cell per paragraph A-3, steps f, g, h, i, j, and k.

e. Consult Safety Data Sheet 1M03226, then power up system. Monitor thermocouple output. It should stabilize at setpoint mV ±0.2 mV. Recalibrate probe per Instruction Bulletin applicable to your electronics package.

REPLACEMENT PARTS

Table A-3. Replacement Parts for Probe

FIGURE and INDEX No.	PART NUMBER	DESCRIPTION
A-1, 13	3D39149G06[1]	1U03066G07V-Strut Assembly (18 in.)
A-1, 13	3D39149G07[1]	V-Strut Assembly (3 ft)
A-1, 13	3D39149G08[1]	V-Strut Assembly (6 ft)
A-16, 2	3534B56G04[2]	Contact and Thermocouple Assembly (18 in.)
A-16, 2	3534B56G05[2]	Contact and Thermocouple Assembly (3 ft)
A-16, 2	3534B56G06[2]	Contact and Thermocouple Assembly (6 ft)
	4847B61G19	Cell Replacement Kit (18 in.)
	4847B61G20	Cell Replacement Kit (3 ft)
	4847B61G21	Cell Replacement Kit (6ft)
	4847B61G24	Cell Replacement Kit (No Inconel and Platinum Pad Assembly)
	1U05677G01	Probe Disassembly Kit
A-11	1U05677G04	F/A Diffuser Hub Assembly (Snubber Diffuser)
	1U05677G06	F/A Diffuser Hub Assembly (For use with Abrasive Shield)
	6292A74G02	Ceramic Diffusion Element Replacement Kit
	1N04966H02	Abrasive Shield Assembly (3 ft)
	1N04966H03	Abrasive Shield Assembly (6 ft)
	1M03241H01	90° Elbow for Bypass
A-7, 2	4507C26G07	Bypass Gas Pickup Tube (3 ft)
A-7, 3	4507C26G08	Bypass Gas Pickup Tube (6 ft)
A-7, 4	4507C26G09	Bypass Gas Pickup Tube (9 ft)
	263C152G01	Reference Gas Air Set
	771B635H01	Calibration Gas Rotameter
	1L03650H01	F/A Diffusion Hub Setscrew
	IB-106-300NFX	Instruction Bulletin (IFT)
	IB-106-300NCX	Instruction Bulletin (CRE)
	IB-106-300NEX	Instruction Bulletin (Upgrade - CENELEC Digital Electronics)
	1U03066G07	EExd Barrier Gland Kit (one pair of glands per kit)

[1] V-Strut assembly includes contact and thermocouple assembly.
[2] Contact and thermocouple assembly includes platinum pad and inconel wire.

NOTE

The replacement parts listed above must be obtained only from the manufacturer or his agent.

APPENDIX BX, REV. 1.2
HPS 3000 HEATER POWER SUPPLY FIELD MODULE (CENELEC APPROVED VERSION)

DESCRIPTION

WARNING

Consult Safety Data Sheet 1M03243 for safety related information.

B-1 DESCRIPTION

The Rosemount CENELEC approved HPS 3000 Heater Power Supply Field Module (Figure B-1) acts as an interface between probe and electronics and supplies power to the probe heater. The unit allows the use of probes with a number of different electronics packages.

The CENELEC approved HPS 3000 is certified EExd IIC T6 to CENELEC standards EN50014 and EN50018.

The heater power supply, Figure B-2, consists of a motherboard, daughterboard, and a transformer for supplying correct voltage to the probe heater. The mother- and daughterboards contain terminal strips for connecting probe, electronics, and power supply.

The HPS is jumper configurable for 120, 220, or 240 Vac.

CAUTION

If you reconfigure the equipment for a line voltage other than the one marked on the serial label, then you should change the marking on the serial label to state the new line voltage.

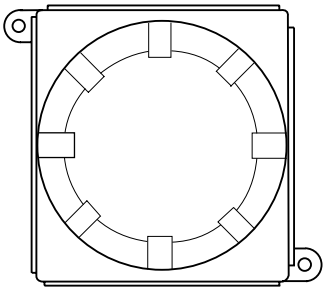

Figure B-1. CENELEC Approved HPS 3000 Heater Power Supply Field Module

B-2 THEORY OF OPERATION

The HPS 3000 Heater Power Supply may perform slightly different functions, depending upon which electronics package with which it is used. Figure B-3 shows a functional block diagram of the unit. The HPS contains a transformer for converting line voltage to 44 volts needed to power the probe heater. The relay can be used to remotely turn the probe on or off manually.

A triac module is used to turn the heater on or off, depending on probe temperature.

When used with the CRE 3000 Control Room Electronics or IFT 3000 Intelligent Field Transmitter, the HPS uses a cold junction temperature compensation feature. This allows for the use of a less expensive cable between the HPS and CRE or HPS and IFT. The HPS and electronics package can be located up to 364 m (1200 ft) apart.

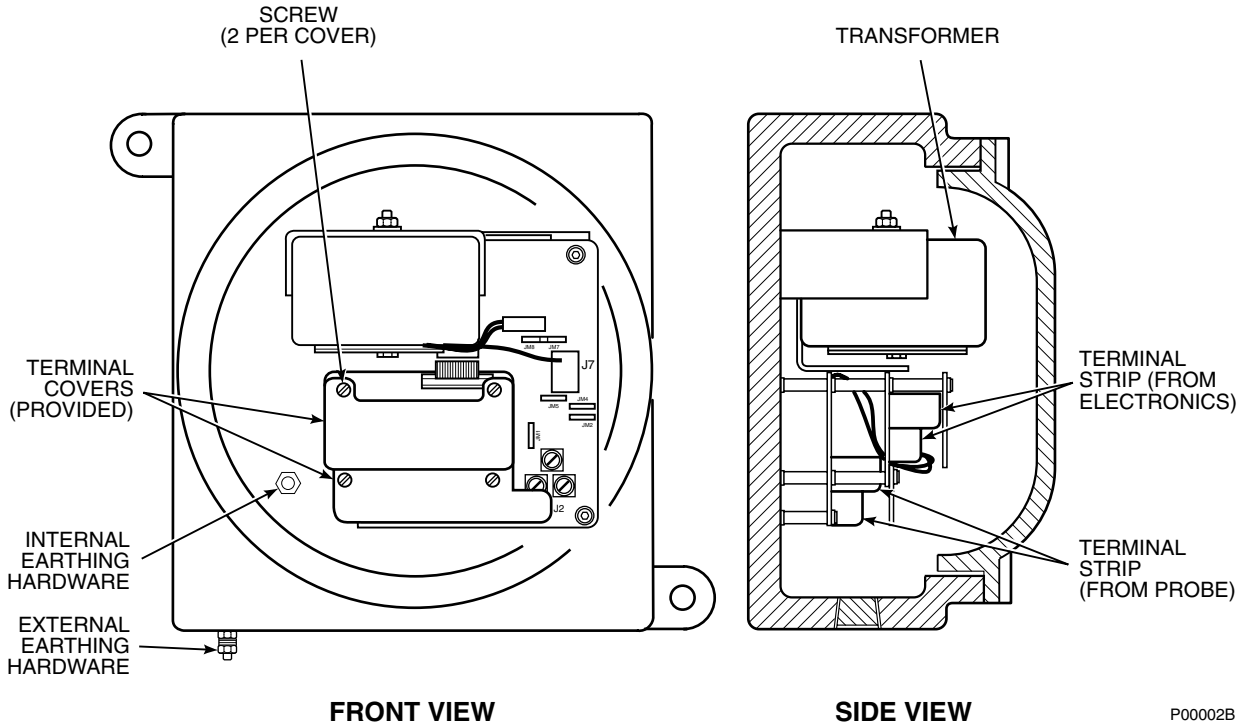

Figure B-2. Heater Power Supply, Interior

Table B-1. Specifications for Heater Power Supply

Power Supply	110/115/220 VAC ± 10% at 50/60 Hz
Power Requirement	200 VA
Humidity Range	95% Relative Humidity
Ambient Temperature Range	0° to 60°C (32° to 140°F)
Vibration	5 m/sec^2, 10 to 500 xyz plane
External Electrical Noise	Minimum Interference
Installation Category (Overvoltage Category)	IEC 664 Category II
Cabling Distance Between HPS 3000 and Probe	Maximum 45 m (150 ft)
Cabling Distance Between HPS 3000 and CRE 3000	Maximum 364 m (1200 ft)
Cabling Distance Between HPS 3000 and IFT 3000	Maximum 364 m (1200 ft)
Approximate Shipping Weight	20 kg (44 lbs)

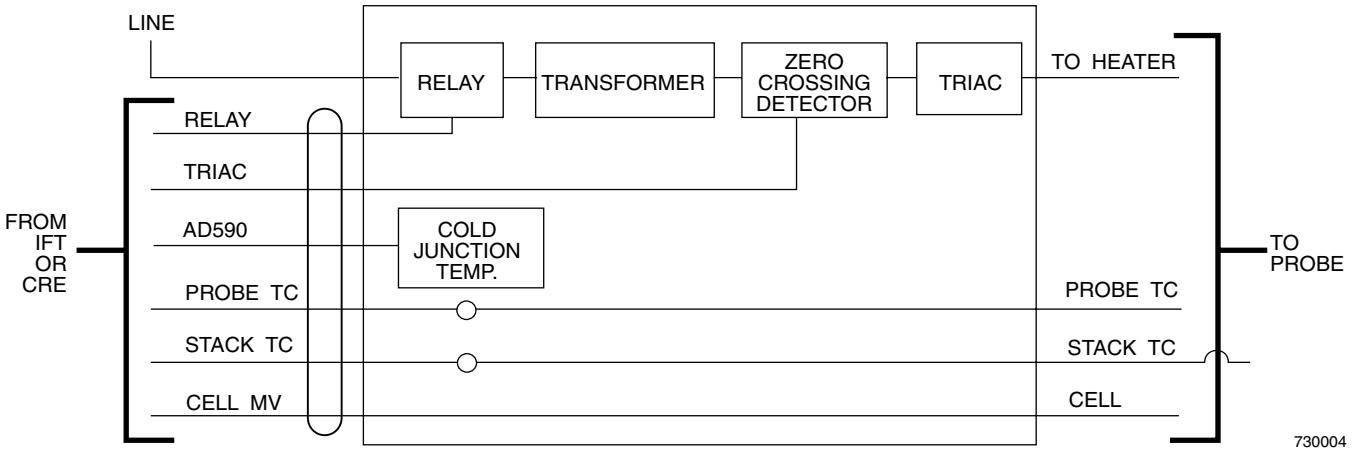

Figure B-3. Heater Power Supply Block Diagram

The standard cable, between probe and HPS, is thermocouple compensated. This prevents the additional junctions between thermocouple and cablefrom producing a voltage which would affect the thermocouple output signal. A temperature sensor in the HPS monitors the temperature at the junction and sends a voltage signal to the CRE and IFT. The CRE and IFT uses this signal to compensate the probe thermocouple reading for the temperature at the junction between the compensated and uncompensated cables.

In operation, when connected to the CRE 3000 Control Room Electronics, line voltage passes through the relay (when on) and is converted into 44 volts by the transformer. If the probe thermocouple indicates that the probe has dropped below operating temperature, a signal from the CRE triggers the triac. The triac then supplies voltage to the probe heater, warming the cell. Conversely, if the probe thermocouple indicates that the probe heater has reached the upper limit of operating temperature, the CRE deactivates the triac, shutting off power to the heater.

B-3 CONNECTIONS TO NEW GENERATION ELECTRONICS (IFT 3000 AND CRE 3000)

Use the following information about input and output connections if your system includes CENELEC approved new generation electronics.

a. Probe Thermocouple

PBTC+ and PBTC- (J3 pins 4 and 5, J8 pins 3 and 4). This thermocouple provides feedback from the probe heater to the electronics.

b. Stack Thermocouple (Optional)

STTC+ and STTC- (J2 pins 1 and 2, J9 pins 5 and 6). The stack thermocouple is a thermocouple separate from the CENELEC approved World Class 3000 Probe. It is used to measure stack temperature.

c. AD590

AD590+ and AD590- (J8 pin 5, J8 pin 6). The AD590 is a temperature measuring device used to measure temperature inside the CENELEC approved Heater Power Supply HPS 3000.

d. Zirconium Cell

PBMV+ and PBMV- (J3 pins 1 and 2, J8 pins 1 and 2). The voltage signal from the zirconium cell.

e. Probe Heater

44 Vac output (J2 pins 4, 5, and 6). The 44 Vac output to power the probe heater.

f. TRIAC

TRIAC+ and TRIAC- (J9 pins 1 and 2). The signal by which the new generation electronics controls the triac of Heater Power Supply HPS 3000. By controlling this triac, the new generation electronics modulates the 44 V waveform to the probe heater.

g. Relay

Relay+ and Relay- (J9 pins 3 and 4). By activating or deactivating this relay, the new generation electronics can switch off or switch on the 44 Vac from the Heater Power Supply HPS 3000 to the probe heater. This feature is jumper selectable (JM2).

h. Line Voltage

(J1 pins 1, 2, and 3). Jumper selectable (JM1, JM4, and JM5) for 120 Vac or 220/240 Vac.

i. Shield (Cable Armour)

The cable armour, as well as providing mechanical protection, acts as a shield. This shield is directly connected to the Heater Power Supply HPS 3000 housing through the cable gland.

NOTE

When using the HPS 3000 with an existing electronics package, such as Models 218, 218A, or 225, the electronics will not have the input/output capacity to support all of the functions mentioned in this section. Refer to Instruction Bulletin IB-106-300NEX.

B-4 CONNECTION TO OLD GENERATION ELECTRONICS

Use the following information about input and output connections if your system does not include CENELEC approved new generation digital electronics:

a. Probe Thermocouple

PBTC+ and PBTC- (J3 pins 4 and 5, J8 pins 3 and 4). This thermocouple provides feedback from the probe heater to the electronics.

b. Stack Thermocouple

(Optional) STTC+ and STTC- (J2 pins 1 and 2, J9 pins 5 and 6). The stack thermocouple is a thermocouple separate from the WC3000 probe. It is used to measure stack temperature.

c. Zirconium Cell

PBMV+ and PBMV- (J3 pins 1 and 2, J8 pins 1 and 2). The voltage signal from the zirconium cell.

d. Probe Heater

44 Vac out (J2 pins 4, 5, and 6). This is the 44 Vac output to power the probe heater.

e. Line Voltage Pins

This is a modulated 115 Vac from the old generation electronics. Bridge rectifier (BR1) converts this modulated 115 Vac to the TRIAC+ and TRIAC- low voltage signal. This signal controls the triac of the Heater Power Supply HPS 3000. A modulated 44 Vac is thus sent to the probe heater.

f. Shield (Optional)

(J8 pin 7.) The PBMV+/PBMV- and the PBTC+/PBTC- lines to the old generation electronics may be shielded against electrical noise through these connections.

g. Shield (Cable Armour)

The cable armour, as well as providing mechanical protection, acts as a shield. This shield is directly connected to the Heater Power Supply HPS 3000 housing through the cable gland.

TROUBLESHOOTING

WARNING

Before carrying out any work on the CENELEC approved HPS 3000, consult Safety Data Sheet 1M03243.

WARNING

Install all protective equipment covers and safety ground leads after troubleshooting. Failure to replace covers and ground leads could result in serious injury or death.

B-5 OVERVIEW

The HPS 3000 troubleshooting section describes how to identify and isolate faults which may develop in the HPS 3000 assembly.

B-6 HPS 3000 TROUBLESHOOTING

The HPS 3000 troubleshooting may overlap with the probe in use in the system. Faults in either system may cause an error to be displayed in the electronics package. Figure B-4 and Figure B-5 provide troubleshooting information.

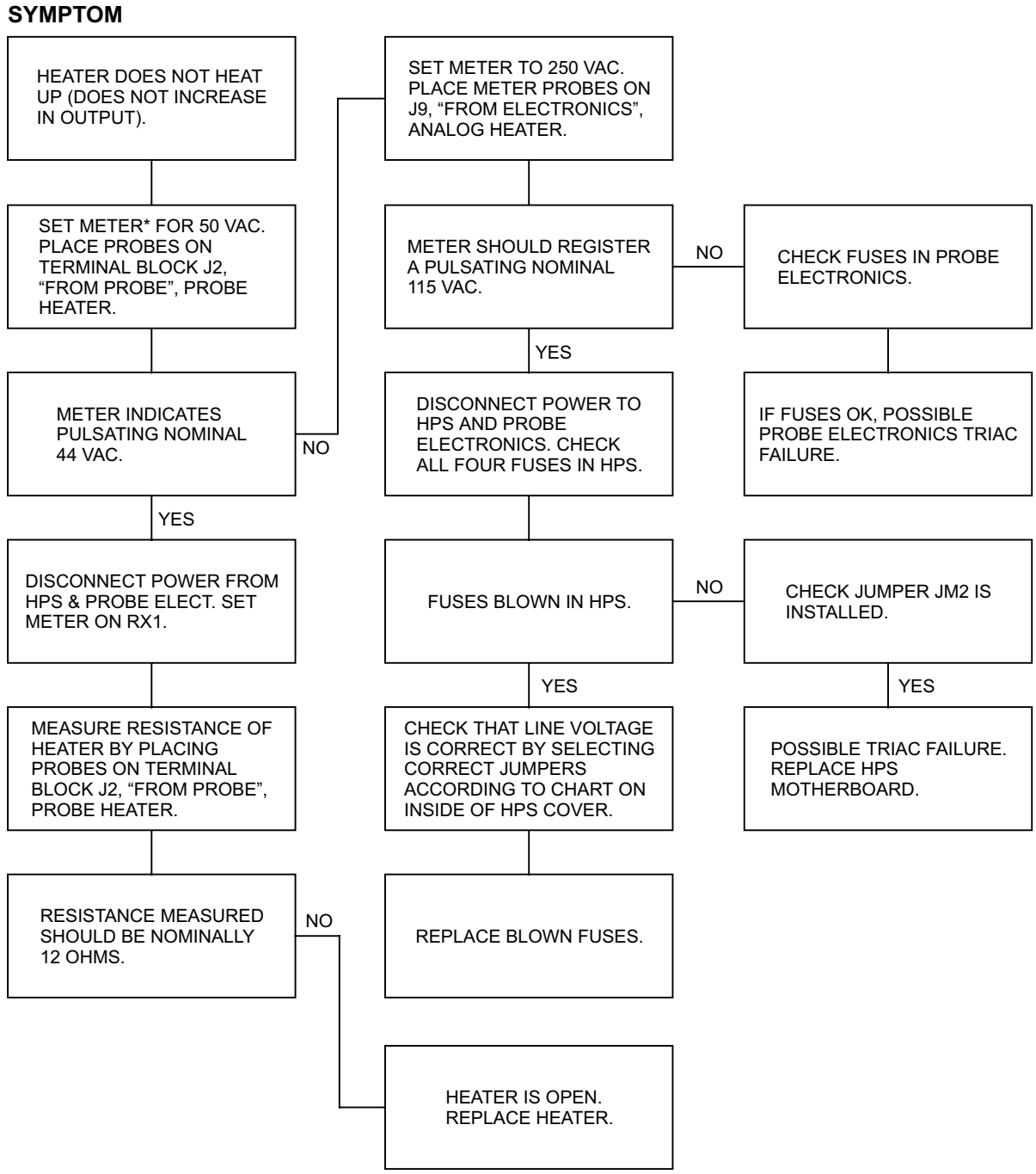

*SIMPSON MODEL 260 OR EQUIVALENT MULTIMETER.

34990015

Figure B-4. HPS Troubleshooting Flowchart, #1

BX

SYMPTOM

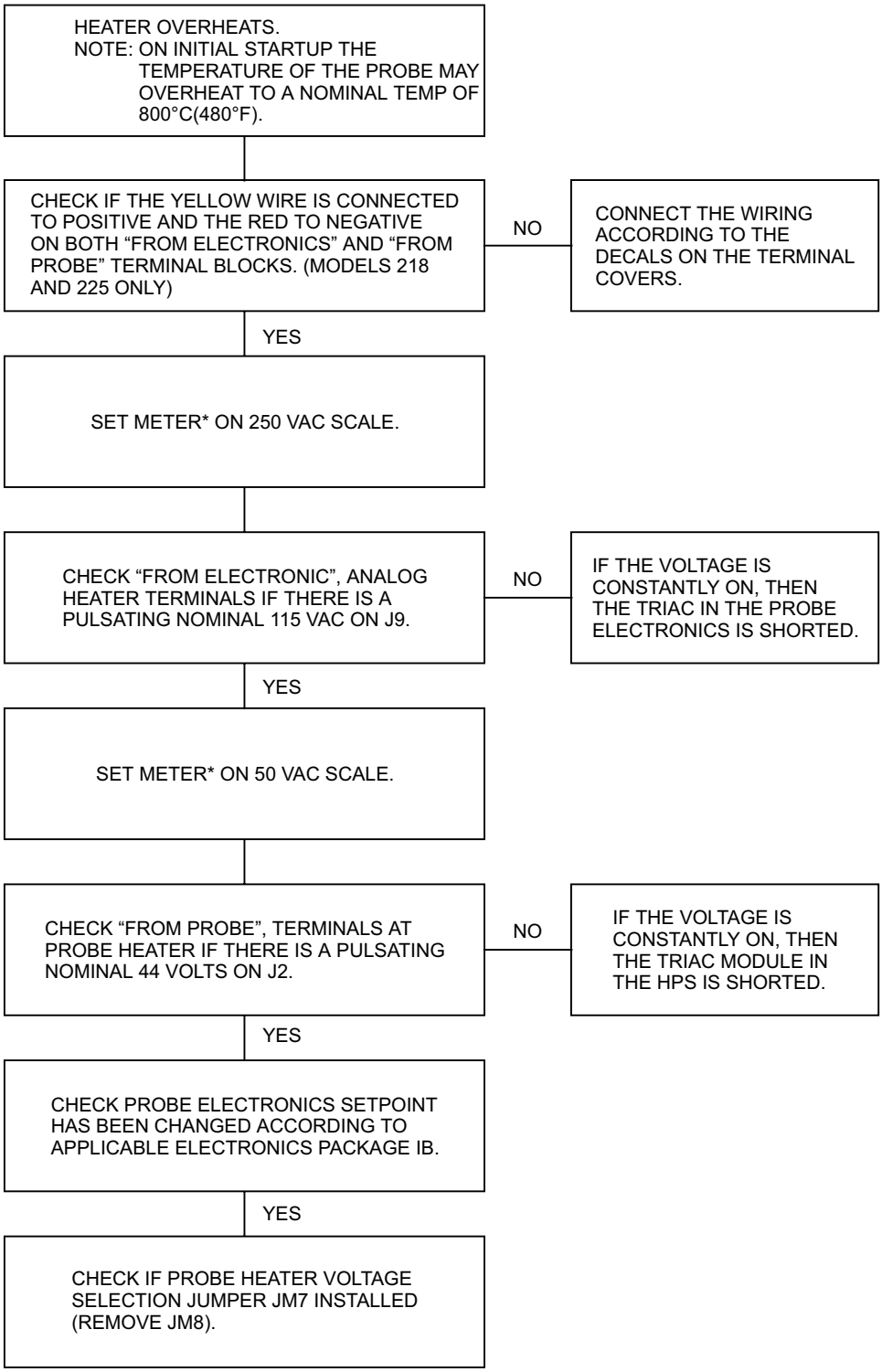

*SIMPSON MODEL 260 OR EQUIVALENT MULTIMETER.

34990014

Figure B-5. HPS Troubleshooting Flowchart, #2

MAINTENANCE AND SERVICE

WARNING

Consult Safety Data Sheet 1M03243 before performing any work on the CENELEC approved HPS 3000.

WARNING

Install all protective equipment covers and safety ground leads after equipment repair or service. Failure to install covers and ground leads could result in serious injury or death.

B-7 OVERVIEW

This section describes service and routine maintenance of the HPS 3000 Heater Power Supply Field Module. Replacement parts referred to are available from Rosemount. Refer to Replacement Parts of this appendix for part numbers and ordering information.

B-8 FUSE REPLACEMENT

The heater power supply's motherboard (25, Figure B-6) contains four identical 5 amp fuses (24) (5 amp anti-surge, Type T to IEC127, ROSEMOUNT Part No. IL01293H02). To check or replace a fuse, simply unscrew the fuse holder cap (23) with a flat head screwdriver and remove fuse. After checking or replacing a fuse, reinstall fuse holder cap.

B-9 TRANSFORMER REPLACEMENT

WARNING

Consult Safety Data Sheet 1M03243 before performing any work on the CENELEC approved HPS 3000.

a. Follow the power down procedure outlined in safety data sheet 1M03243 and the official "Codes of Practice" for your country of installation.

b. Loosen setscrew (13, Figure B-6) retaining HPS cover (14). Remove HPS cover.

c. Remove hex nut (2), flat washer (3), and hex head bolt (4) that retain transformer to mounting bracket.

d. Disconnect the 6-pin transformer wiring harness connector from J7 on the HPS motherboard (25). Disconnect the 2-pin wiring harness connector from the jumper that was selected to configure the HPS for the proper voltage.

NOTE

The transformer connector is keyed making connection possible in only one direction.

e. Remove old toroidal transformer (11). Place new transformer in position and reconnect wiring harness connectors as noted in step d.

f. Place insulating disc (10) (one on either side of transformer) and metal disc (12) on transformer.

g. Tighten hex nut (2) and hex head bolt (4) only enough to firmly hold transformer in place.

h. Reinstall HPS cover (14) and secure with setscrew (13).

B-10 MOTHERBOARD REPLACEMENT.

WARNING

Consult Safety Data Sheet 1M03243 before performing any work on the CENELEC approved HPS 3000.

a. Follow the power down procedure outlined in safety data sheet 1M03243 and the official "Codes of Practice" for your country of installation.

BX

NOTE: NOT ALL PARTS SHOWN ARE AVAILABLE FOR PURCHASE SEPARATELY. FOR A LIST OF AVAILABLE PARTS, SEE TABLE B-2.

1. HPS Housing
2. Hex Nut
3. Flat Washer
4. Hex Head Bolt
5. Transformer Mounting Bracket
6. Screw
7. Lockwasher
8. Flat Washer
9. Hex Standoff
10. Insulating Disc
11. Toroidal Transformer
12. Metal Disc
13. Setscrew
14. HPS Cover
15. O-Ring Seal
16. Slotted Screw
17. Lockwasher
18. Flat Washer
19. Terminal Strip Cover (Probe)
20. Terminal Strip Cover (Electronics)
21. HPS Daughterboard PCB
22. Hex Stand Off
23. Fuse Holder Cap
24. Fuse
25. HPS Motherboard PCB
26. Hex Nut
27. Hex Standoff
28. Earthing Hardware

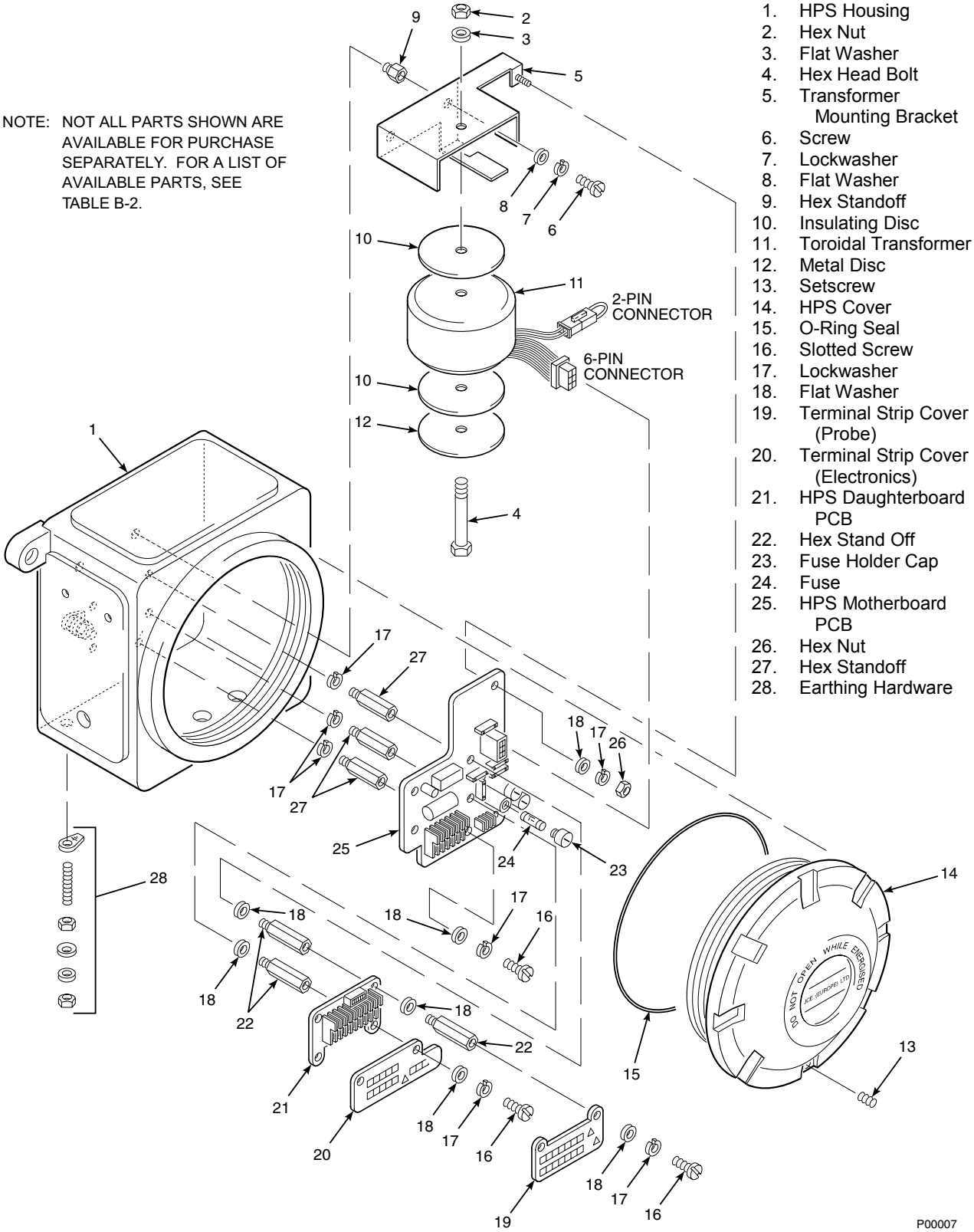

Figure B-6. Heater Power Supply, Exploded View

b. Loosen setscrew (13) retaining HPS cover (14). Remove cover.

c. Disconnect transformer wiring harness connectors as described in the previous paragraph from motherboard (25).

d. Remove slotted screw (16), lockwasher (17), and flat washer (18) attaching terminal strip covers (19) and (20). Remove terminal strip covers.

e. Unplug ribbon cable from the receptacle on the daughterboard (21). Take note of location of black and white wires connected to pin 8 and pin 9 of terminal strip J8. Disconnect these wires from J8.

f. Unscrew stand offs (22) on either side of the daughterboard. Remove daughterboard (21).

g. Unscrew four stand offs (22) that support the daughterboard.

h. Making a note of the location and color of each wire, disconnect wires from terminal strip on HPS motherboard (25).

i. Remove hex nut (26), lockwasher (17), and flat washer (18) securing the HPS motherboard to the enclosure and transformer mounting bracket (5).

j. Remove motherboard (25).

k. Position new motherboard on stand offs and reinstall hex nut, lockwasher, and flat washer removed in step i.

l. Reconnect wires to terminal strip in positions noted in step h. Cross check with wiring diagram shown on Figure 2-4 of the main text (IB-106-300NX Series).

m. Reinstall four stand offs removed in step g. Position daughterboard (21) on stand offs and reinstall stand offs removed in step f.

n. Plug ribbon cable back into receptacle on daughterboard and reconnect black and white wires. The black wire goes to pin 8 and the white to pin 9 of terminal block J8 on daughter board. Reinstall terminal covers.

o. Reconnect transformer wiring harness connectors to motherboard. Note that in any case, the transformer's connector is keyed so that it can only be inserted one way.

p. Reinstall HPS cover (14) and secure with setscrew (12).

B-11 DAUGHTERBOARD REPLACEMENT

WARNING

Consult Safety Data Sheet 1M03243 before performing any work on the CENELEC approved HPS 3000.

a. Follow the power down procedure outlined in safety data sheet 1M03243 and the official "Codes of Practice" for your country of installation.

b. Loosen setscrew (13, Figure B-6) retaining HPS cover (14). Remove cover.

c. Remove slotted screw (16), lockwasher (17), and flat washer (18) securing terminal strip covers (19) and (20). Remove terminal strip covers.

d. Making a note of the location and color of each wire, disconnect wires from the terminal strip on the daughterboard (21).

e. Unplug ribbon cable from receptacle on daughterboard. Take note of location of black and white wires connected to pin 8 and pin 9 of terminal strip J8. Disconnect these wires from J8.

f. Unscrew two stand offs (22) from daughterboard. Remove daughterboard (21).

g. Position new daughterboard on four stand offs (22) on motherboard (25). Reinstall the stand offs removed in step f.

h. Plug ribbon cable back into receptacle on daughterboard and reconnect black and white wires. The black wire goes to pin 8 and the white wire to pin 9 of terminal block J8 on daughterboard. Reinstall terminal covers.

i. Reconnect wires to terminal strip in positions noted in step d. Cross check with wiring diagram shown on Figure 2-4 of the main text (IB-106-300NX Series). Reinstall terminal covers.

j. Reinstall HPS cover (14) and secure with setscrew (13).

REPLACEMENT PARTS

Table B-2. Replacement Parts for Heater Power Supply

FIGURE and INDEX No.	PART NUMBER	DESCRIPTION
B-1	1U05667G01	CENELEC HPS 3000 (120V)
B-1	1U05667G03	CENELEC HPS 3000 (220V/240V)
B-6, 24	1L01293H02	Fuse 5A @ 250 Vac, anti-surge, case size; 5 x 20 mm, type T to IEC127, Schurter
B-6, 25	3D39080G02	Motherboard
B-6, 21	3D39078G01	Daughterboard
B-6, 11	1M02961G05	Toroidal Transformer (120V/240V)
	IB-106-300NEX	Instruction Bulletin Upgrade and Digital Electronics
	IB-106-300NFX	Instruction Bulletin (IFT)
	IB-106-300NCX	Instruction Bulletin (CRE)

NOTE

The replacement parts listed above must be obtained only from the manufacturer or his agent.

APPENDIX DX, REV. 2.1
MPS 300 MULTIPROBE TEST GAS SEQUENCER

DESCRIPTION

WARNING

The MPS 3000 Multiprobe Test Gas Sequencer must be installed in a non-hazardous, explosive free environment.

NOTE

Z-Purge option is available. Reference page D-4.

D-1 DESCRIPTION

The Rosemount MPS 3000 Multiprobe Test Gas Sequencer provides automatic test gas sequencing for up to four probes. The MPS routes test gas to the selected probe under control of the CRE, IFT, or digital electronics package. The electronics package can be preprogrammed by the user for automatic periodic recalibration, or manually initiated calibration through the keypad on the front of the electronics package. The calibration parameters held in the electronics package can be selected to automatically update after each calibration.

The MPS is housed in a NEMA 4X (IP56) non-hazardous enclosure, Figure D-1.

NOTE

A single multichannel MPS cannot be shared among a number of CRE electronics.

The MPS, Figure D-2, consists of: an air pressure regulator, a terminal board, a flowmeter assembly (one for each probe, up to four per MPS), HI GAS solenoid, LO GAS solenoid, a manifold, and a power supply. Each flowmeter assembly contains a probe solenoid.

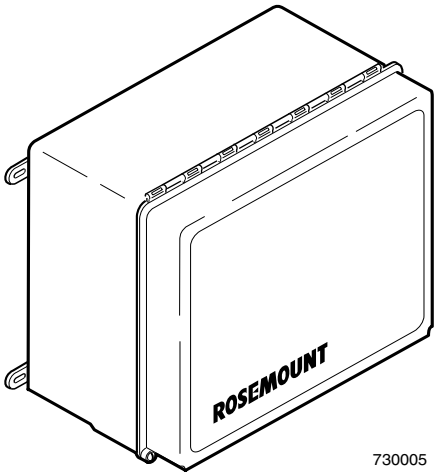

Figure D-1. MPS 3000 Multiprobe Test Gas Sequencer

An optional Z-purge arrangement is available for hazardous area classification. See Application Data Bulletin AD 106-300B.

D-2 THEORY OF OPERATION

A typical automatic calibration setup is shown in Figure D-3. The MPS 3000 Multiprobe Test Gas Sequencer operates under the control of the CRE, IFT, or digital electronics package. When the electronics package initializes automatic calibration, the solenoid controlling the selected probe is energized. Next, the solenoid controlling test gas 1 (high O_2) energizes allowing test gas 1 to flow to that probe. After the probe measures the oxygen concentration of test gas 1, the gas solenoid is deenergized. An operator selected time delay allows the gas to clear the system. Next, the solenoid controlling test gas 2 (low O_2) energizes and allows test gas 2 to flow to the probe. After the probe measures the oxygen concentration of test gas 2, the gas and probe solenoids deenergize. The automatic calibration is now complete for the probe selected.

DX

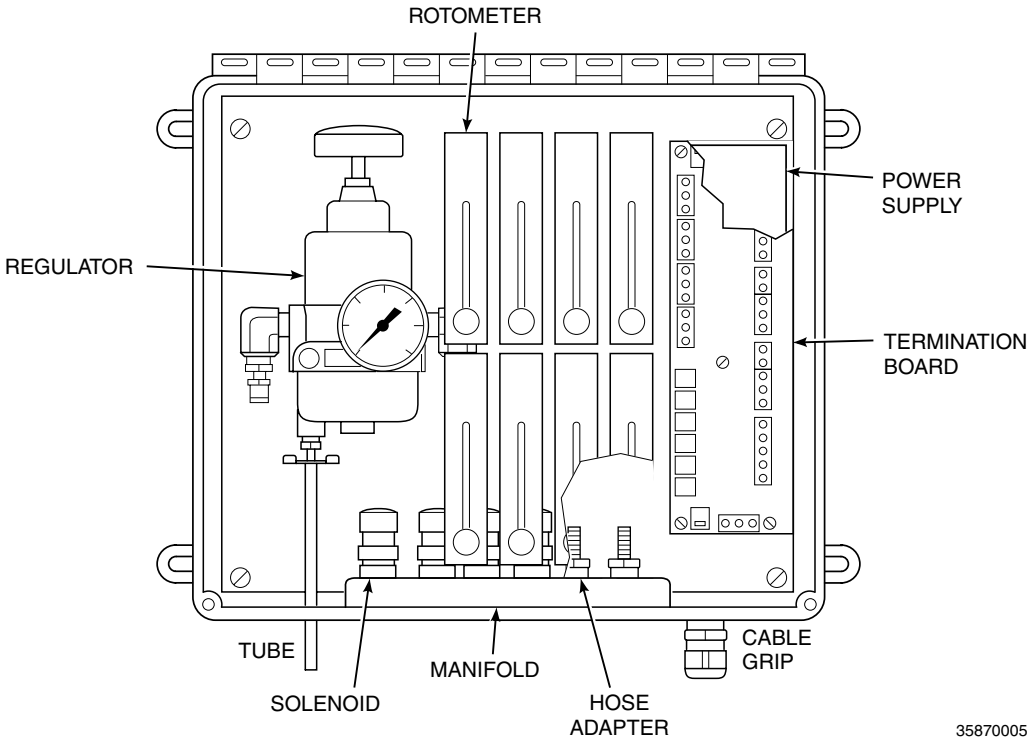

Figure D-2. Multiprobe Test Gas Sequencer, Interior

Table D-1. Specifications for Multiprobe Test Gas Sequencer

Power Supply	110/115/220 Vac ±10% at 50/60 Hz
Power Requirement	15 VA (Watts)
Electrical Classification	NEMA 4X (IP56)
Humidity Range	95% Relative Humidity
Ambient Temperature Range	-30° to 71°C (-20° to 160°F)
Vibration	5 m/sec^2, 10 to 500 xyz plane
External Electrical Noise	Minimum Interference
Installation Category (Overvoltage Category)	IEC 664 Category II
Piping Distance Between MPS 3000 and Probe	Maximum 91 m (300 ft)
Cabling Distance Between MPS 3000 and Electronics Package	Maximum 303 m (1000 ft)
In Calibration Status Relay	48V max, 100 mA max
Cabling Distance Between MPS 3000 and Status Relay Indicator	Maximum 303 m (1000 ft)
Approximate Shipping Weight	16 kg (35 lbs)

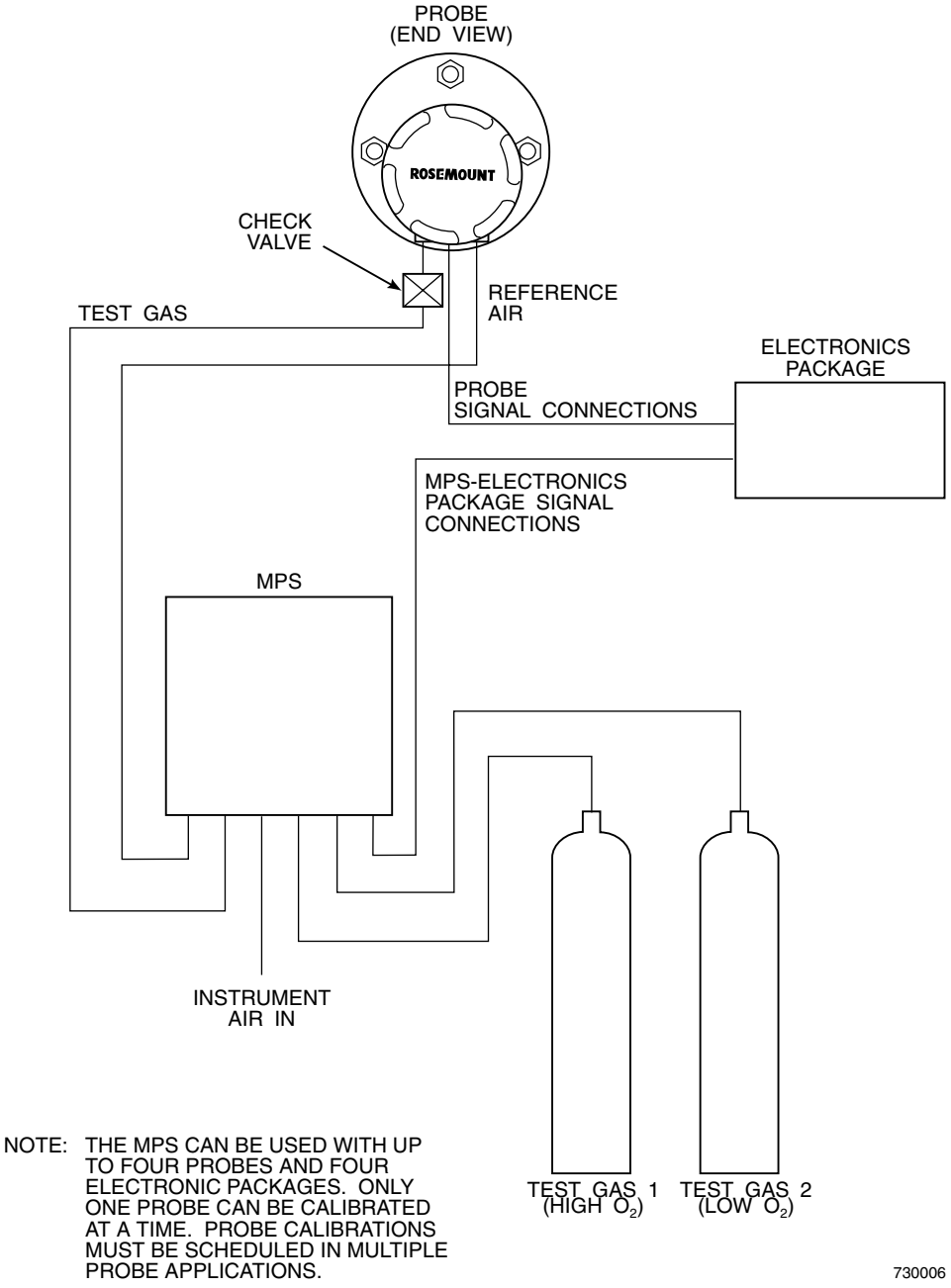

NOTE: THE MPS CAN BE USED WITH UP TO FOUR PROBES AND FOUR ELECTRONIC PACKAGES. ONLY ONE PROBE CAN BE CALIBRATED AT A TIME. PROBE CALIBRATIONS MUST BE SCHEDULED IN MULTIPLE PROBE APPLICATIONS.

Figure D-3. Typical Automatic Calibration System

DX

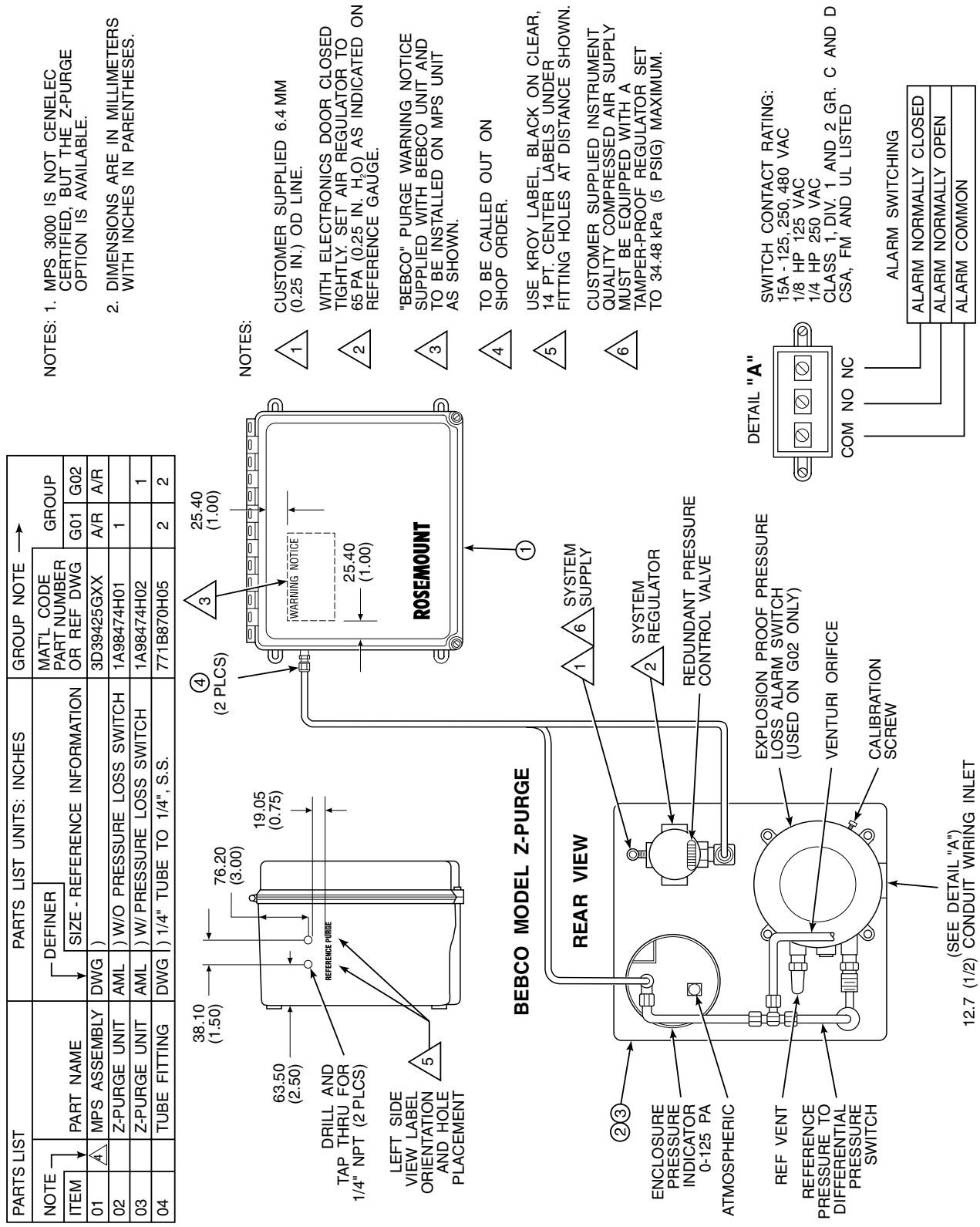

Figure D-4. MPS with Z-Purge

TROUBLESHOOTING

D-3 OVERVIEW

This section describes troubleshooting for the Multiprobe Test Gas Sequencer. Additional troubleshooting information can be found in the Instruction Bulletin for the electronics package.

WARNING

Install all protective equipment covers and safety ground leads after troubleshooting. Failure to replace covers and ground leads could result in serious injury or death.

D-4 TROUBLESHOOTING

Table D-2 provides a guide to fault finding failures within the MPS. The flowchart in Figure D-5 provides an alternate approach to fault finding MPS related problems.

Table D-2. Fault Finding

SYMPTOM	CHECK	FAULT	REMEDY
1. Power to solenoid, test gas not released to probe.	Test gas	Insufficient test gas	Install new test gas tanks.
	Solenoid	Solenoid failure	Replace solenoid.
2. No power to solenoid.	Power supply output	Power supply failure	Replace power supply.
	Fuses in power supply	Fuse blown	Replace fuse.
	Main power source	Main power off	Reestablish power.

SYMPTOM

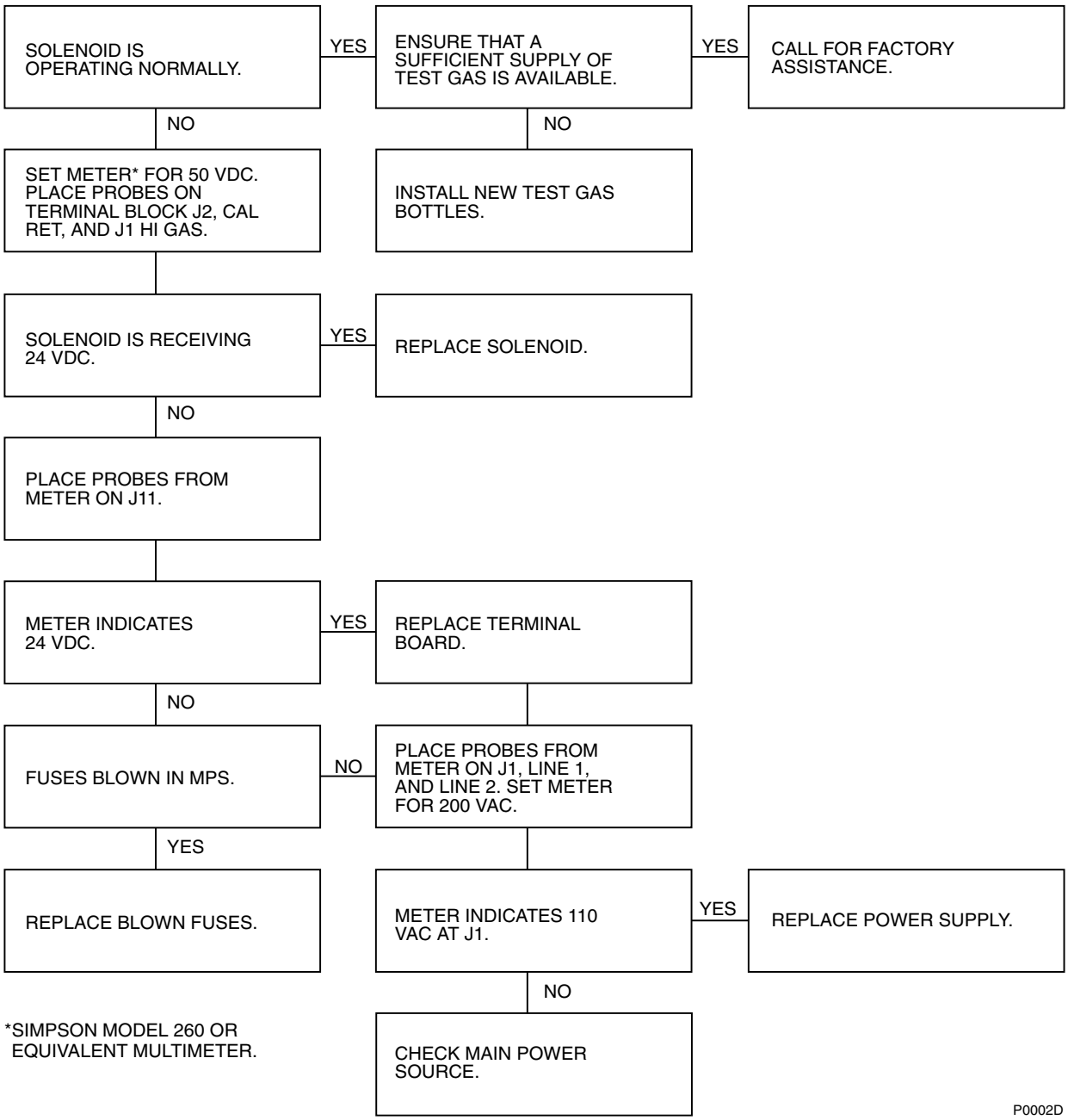

Figure D-5. MPS Troubleshooting Flowchart

MAINTENANCE AND SERVICE

D-5 OVERVIEW

This section describes service and routine maintenance of the MPS 3000 Multiprobe Test Gas Sequencer. Replacement parts referred to are available from Rosemount. Refer to Table D-3 for part numbers and ordering information.

WARNING

Install all protective equipment covers and safety ground leads after equipment repair or service. Failure to install covers and ground leads could result in serious injury or death.

D-6 FUSE REPLACEMENT

Power supply (58, Figure D-6) contains two identical fuses. Perform the following procedure to check or replace a fuse.

WARNING

Disconnect and lock out power before working on any electrical components.

NOTE

220 Vac versions use two 0.5 amp quick acting fuses (P/N 138799-014). 115 Vac versions use two 1 amp quick acting fuses (P/N 138799-004). Refer to Table D-3 for additional fuse specifications.

a. Turn off power to the system.

b. Open fuseholder (40) and remove the fuse. After checking or replacing a fuse, reinstall top of fuseholder (40).

D-7 POWER SUPPLY REPLACEMENT

WARNING

Disconnect and lock out power before working on any electrical components.

a. Turn off power to the system.

b. Loosen two captive screws holding the MPS cover (15, Figure D-6). Open the MPS cover.

c. Loosen two captive screws holding the inner cover (16). Lower the inner cover.

d. Disconnect the 24V connector from J11 on the termination board (34).

e. Remove two screws (39) and washers (38) holding the terminal cover (37). Remove the terminal cover.

f. Tag and remove wires from terminals 1 and 4 or 5 of the transformer in the power supply (58).

g. Remove two nuts (60) and washers (59) from the screws holding the power supply (58). Remove the power supply.

h. Mount the new power supply onto the screws with two nuts (60) and washers (59). Make sure the ground wires are connected to the upper mounting screw.

i. Reconnect the wires removed in step f.

j. Install the terminal cover (37) with two screws (38) and washers (39).

k. Connect the 24V connector to J11 on the termination board (34).

l. Close and secure the inner cover (16) with two captive screws. Close and secure the outer cover (15) with two captive screws.

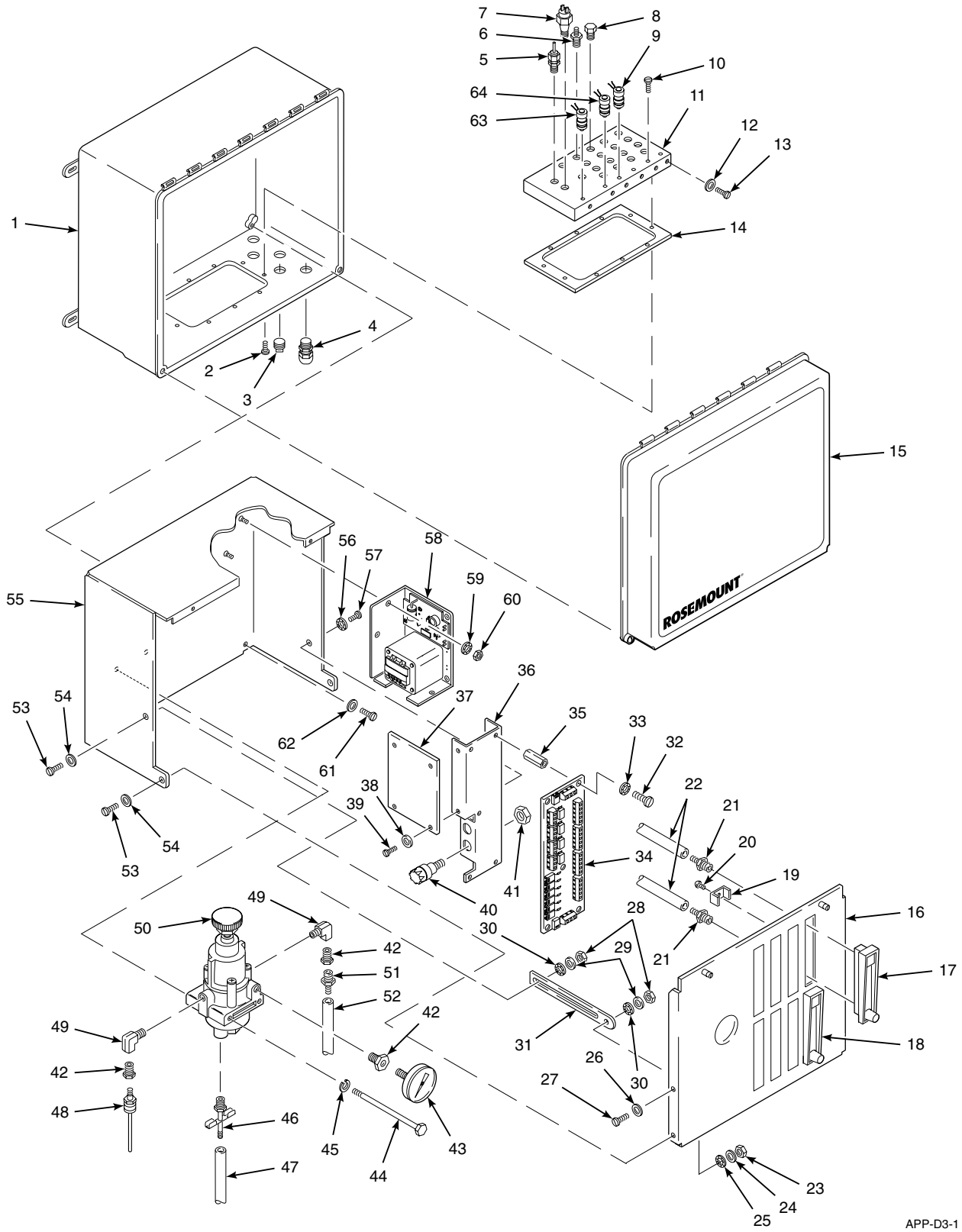

Figure D-6. Multiprobe Test Gas Sequencer, Exploded View

LEGEND FOR FIGURE 3-1

1. Enclosure
2. Screw
3. Plug
4. Cable Grip
5. Fitting
6. Hose Adapter
7. Pressure Switch
8. Plug
9. Solenoid Valve
10. Screw
11. Manifold
12. Washer
13. Screw
14. Gasket
15. Outer Cover
16. Inner Cover
17. Rotometer, 10 SCFH
18. Rotometer, 2.0 SCFH
19. Bracket
20. Screw
21. Hose Adapter
22. 1/8 in. Hose
23. Nut
24. Lockwasher
25. Washer
26. Washer
27. Screw
28. Nut
29. Washer
30. Washer
31. Cover Stop Slide
32. Screw
33. Washer
34. Termination Board
35. Standoff
36. Mounting Bracket
37. Cover Plate
38. Washer
39. Screw
40. Fuseholder
41. Plastic Nut
42. Bushing
43. Pressure Gauge
44. Bolt
45. Washer
46. Drain Valve
47. 1/8 in. Impolene Tubing
48. Connector
49. Elbow
50. Pressure Regulator
51. Hose Adapter
52. 1/4 in. Tube
53. Screw
54. Washer
55. Inner Enclosure
56. Washer
57. Screw
58. Power Supply
59. Washer
60. Nut
61. Screw
62. Washer
63. Solenoid
64. Solenoid

D-8 SOLENOID VALVE REPLACEMENT

An MPS 3000 will always have a HI GAS solenoid (63, Figure D-6) and a LOW GAS solenoid (64) mounted to the manifold (11). Each probe will also have a solenoid valve (9) mounted on the manifold.

WARNING

Disconnect and lock out power before working on any electrical components.

a. Turn off power to the system.

b. Loosen two captive screws holding the MPS cover (15, Figure D-6). Open the MPS cover.

c. Loosen two captive screws holding the inner cover (16). Lower the inner cover.

d. Disconnect the HI GAS (J17), LOW GAS (J18), or Probe (J13-J16) plug from its receptacle on the termination board (34).

e. Loosen the retaining ring in the middle of the solenoid and remove the top part.

f. With a spanner wrench or padded pliers, remove the remaining part of the solenoid from the manifold (11).

g. Separate the new solenoid and screw the smaller part into the manifold.

h. Place the top part of the solenoid into position and tighten the retaining ring.

i. Connect the plug to the proper receptacle on the termination board (34).

j. Close and secure the inner cover (16) with two captive screws. Close and secure the outer cover (15) with two captive screws.

D-9 PRESSURE REGULATOR MAINTENANCE

a. Pressure Adjustments

Pressure regulator (50, Figure D-6) is factory set to 138 kPa (20 psi). Should the pressure need to be changed or adjusted, use the knob on top of the pressure regulator.

b. Condensation Drain

To drain excess moisture from the internal gas circuit of the MPS, periodically loosen drain valve (46) on the bottom of pressure regulator (50). The moisture will flow through vinyl tubing drain (47) on the bottom of pressure regulator (50) and exit the bottom of MPS enclosure (1).

D-10 FLOWMETER ADJUSTMENTS

There are two flowmeters per flowmeter assembly. The top flowmeter is factory set to 5 scfh. The bottom flowmeter is set to 2 scfh. Should the flow need to be changed or adjusted, use knob on the bottom of the respective flowmeter.

D-11 ADDING PROBES TO THE MPS

This procedure is used to add a probe to the MPS.

WARNING

Disconnect and lock out power before working on any electrical components.

a. Turn off power to the system.

b. Loosen the two captive screws holding the MPS cover (15). Lift the cover.

c. Loosen the two captive screws that hold the inner cover (16) and lower the cover.

d. From the backside of the inner cover, locate the rotometer positions next to the existing unit(s). Insert a hacksaw blade into the slots surrounding the positions for two rotameters, and saw out the knockout tabs.

e. From the front of the inner cover, install a rotometer (P/N 771B635H01) into the top hole and a rotameter (P/N 771B635H02) into the bottom hole. From the backside secure with brackets provided.

f. Remove four brass screw plugs (TEST GAS IN, TEST GAS OUT, REF GAS IN, and REF GAS OUT) for the next probe position in the manifold.

g. Install 1/8" hose adapters (P/N 1A97553H01) into the empty holes using a suitable pipe dope. Attach the tubing.

h. Remove a brass screw plug (P/N 1A97900H01) and install a solenoid (P/N 3D39435G01). Make sure the O-ring seals properly.

i. Attach the hoses to the rotameter using the existing installation as a guide. Support the rotameter while attaching the hose.

j. Install the solenoid wire connector into the proper position (J14-J16) on the termination board (34).

k. Close and secure the inner cover (16) with two captive screws. Close and secure the outer cover (15) with two captive screws.

REPLACEMENT PARTS

Table D-3. Replacement Parts for the Multiprobe Test Gas Sequencer

FIGURE and INDEX No.	PART NUMBER	DESCRIPTION
D-6, 1	1A97909H01*	Power Supply
D-6, 9	3D39435G01**	Solenoid Valve
D-6, 40	138799-004	Fuse, fast acting, 1A @ 250 Vac, size: 1/4" Dia. x 1-1/4" Lg., glass body, non time delay, Bussman part no. BK/AGC-1
D-6, 40	138799-014	Fuse, fast acting, 0.5A @ 250 Vac, size: 1/4" Dia. x 1-1/4" Lg., glass body, non time delay, Bussman part no. BK/AGC-1/2
D-6, 7	771B635H01**	Flowmeter Assembly - Test Gas
D-6, 7	771B635H02**	Flowmeter Assembly - Reference Gas
	1A98631	Probe Adder Kit
D-6, 17	1A97553H01**	Hose Adapter
	4947B46H01**	Tubing Length
	4847B46H02**	Tubing Length
	4847B46H03**	Tubing Length
	4847B46H04**	Tubing Length
D-3	7307A56602	Check Valve

* Specify line voltage and probe type when ordering.
** These items are included in the probe adder kit.

APPENDIX EX, REV. 1.3
IFT 3000 INTELLIGENT FIELD TRANSMITTER

DESCRIPTION

WARNING

See Safety Data Sheet 1M03296 for safety related information.

E-1 DESCRIPTION

The Rosemount IFT 3000 Intelligent Field Transmitter (IFT) (CENELEC Approved), Figure E-1, provides all necessary intelligence for controlling a probe and the optional Multiprobe Test Gas Sequencer. The IFT provides a user-friendly, menu-driven operator interface with context-sensitive, on-line help. The IFT may also be used without an HPS.

The IFT is based on a modular design. There is a maximum total of five PC boards within the IFT. Every IFT contains a microprocessor board, a power supply board, and an interconnect board. Additionally, an IFT may also contain an LDP field electronics board and/or GUI (General User Interface) multipurpose board depending upon the configuration needed.

The front panel configuration may be as follows: a blind unit with no display, a GUI interface with an LDP, and an LDP interface with four membrane keys. If the IFT has both a GUI interface and an LDP, the LDP will not be equipped with the operator keys.

a. Microprocessor Board

The microprocessor board contains, EEPROM, RAM, and a real-time clock. The microprocessor board also controls the probe heater. The IFT can be used in conjunction with or without an optional HPS 3000 Heater Power Supply providing power to the heater depending upon the user's application.

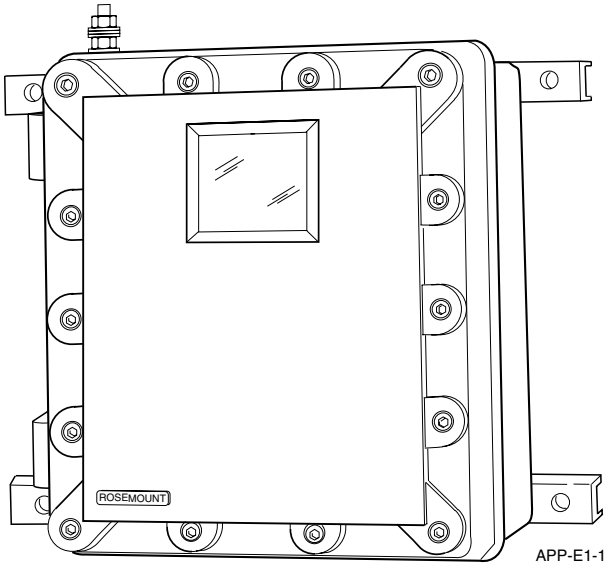

Figure E-1. IFT 3000 Intelligent Field Transmitter (CENELEC Approved)

b. Interconnect Board

The interconnect board is used for all communications from the IFT to the other components within the system. These other components may include an optional HPS 3000 Heater Power Supply, optional MPS Multiprobe Test Gas Sequencer, World Class 3000 Probe (non-HPS equipped system), additional IFTs or CREs, printer, IBM PC, analog output, and relay outputs.

c. Power Supply Board

The power supply board is user configurable for five different line voltages to include 100, 120, 220, and 240 Vac.

EX

Table E-1. Specification for Intelligent Field Transmitter

Electrical Classification	EExd II BT6 (IP65)
Humidity Range	95% Relative Humidity
Ambient Temperature Range	0° to 50°C (32° to 122°F)
Vibration	5 m/sec^2, 10 to 500 xyz plane
External Electrical Noise	Minimum interference
*Communications	1 RS-422 for printer 1 RS-485 for field communications (CRE 3000 or IBM PC)
Analog Outputs	Isolated, 0-20 mA, 4-20 mA, 0-10 V, 20-0 mA, 20-4 mA, or 10-0 V output
O_2 Accuracy (analog output)	0.1% O_2 or +3% of reading, whichever is greater using Hagan test gases
O_2 Range	Field selectable
Power Supply	100/120/220/240 +10% Vac at 50/60 Hz
Power Requirements	(w/HP S 3000): 30 VA (Watts) (w/WC 3000 Probe): 275 VA (Watts)
Installation Category (Overvoltage Category)	IEC 664 Category II
Output Resolution	11 bits (1 bit = 0.05% of output F.S.)
System Speed of Response (amplifier output)	Less than 3 seconds
Resolution Sensitivity - transmitted signal	10.01% O_2
Deadman Contact Output	Form-C, 48 Volt max, 100 mA max
Programmable Contact Outputs	2 available, Form-C, 48 V max, 100 mA max
Displays (optional)	1, with 2.03 cm (0.8 in.) high, 3-character, alphanumeric LED display
Operator Interface (optional)	4-line by 20-character backlight LCD alpha-numeric display; 8-key general purpose keyboard
Approximate Shipping Weight	23 kg (50 lbs)

*Available at future date.

d. LDP Field Electronics Board (optional)

The LDP field electronics board, which is part of the LDP assembly, may be installed in two possible configurations. The first configuration consists of an LED display which displays the current O_2 value. The display also has indicating LEDs for high test gas (TGH), low test gas (TGL), and calibrating (CAL).

The second possible configuration consists of the LED display with four membrane keys. This configuration is used only when the IFT has not been equipped with a GUI multipurpose board. The four membrane keys only allow for calibration to be selected and test gas values to be changed.

e. GUI Multipurpose Board (optional)

The GUI multipurpose board, which is part of the GUI assembly, has a 4-line by 20-character liquid crystal display (LCD) and eight membrane keys. All operator-set variables are input using the LCD screen and keyboard.

WARNING

See Safety Data Sheet 1M03296 for safety related information.

E-2 THEORY OF OPERATION

A functional block diagram of the IFT, connected to the HPS and probe, is shown in Figure E-2. In operation, the IFT monitors the temperature of the cell by means of the probe thermocouple. The IFT controls the temperature of the cell.

NOTE

The IFT may also be connected directly to the probe without the use of an HPS. In this instance, the probe heater will be controlled directly at the IFT.

A cold junction temperature compensation feature ensures an accurate probe thermocouple reading. A temperature sensor in the heater power supply monitors the temperature at the junction between the compensated cable running to the probe and the uncompensated cable running to the IFT. The voltage from this sensor is used by the IFT to compensate the probe thermocouple readings for the temperature at the junction.

The cell signal is a voltage proportional to the oxygen concentration difference between the two sides of the cell. The IFT receives this signal and translates it into a user-specified form for display and/or output.

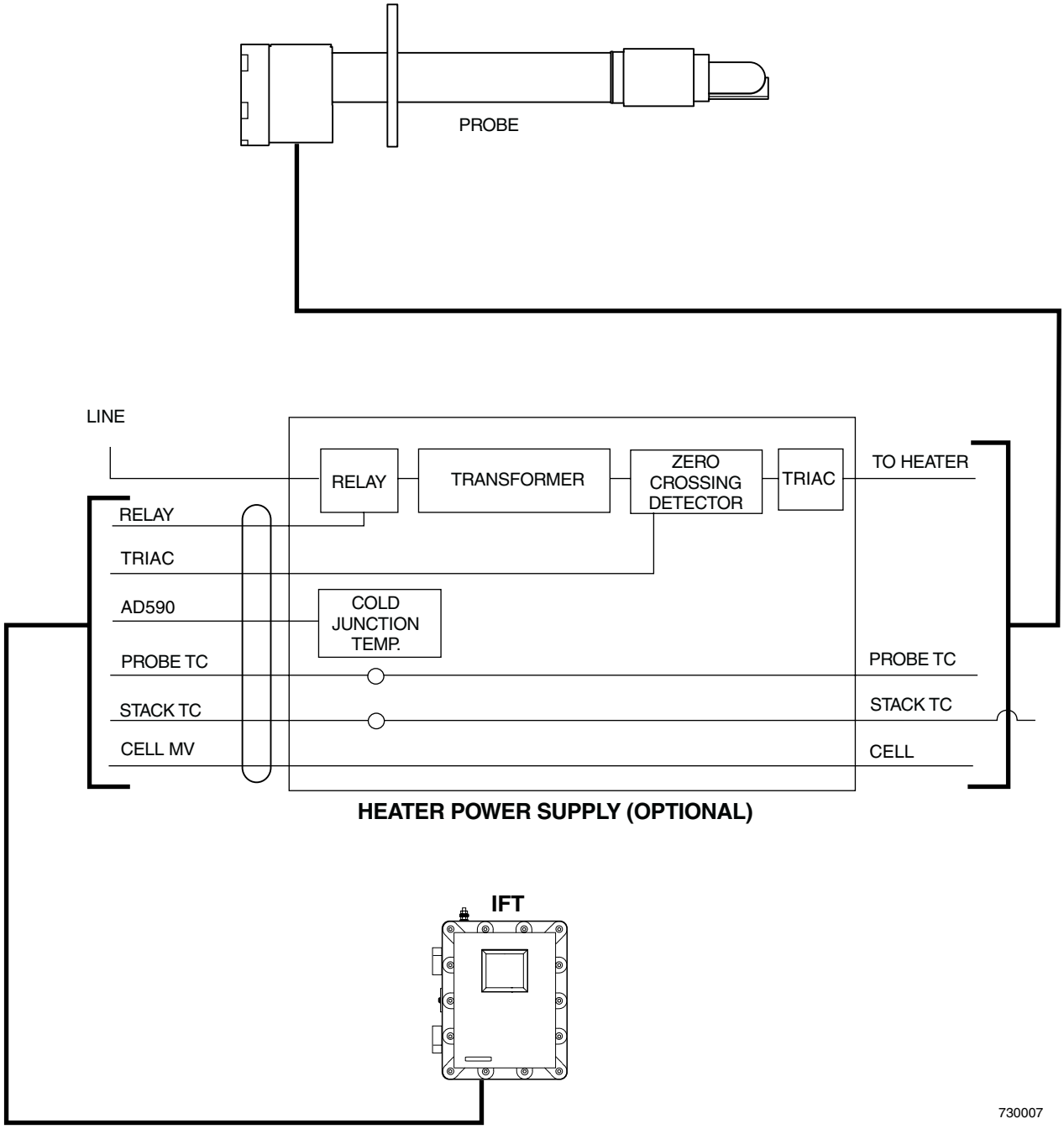

Figure E-2. System Block Diagram

IFT 3000 TROUBLESHOOTING

WARNING

Consult Safety Data Sheet 1M03296 before performing any work on the CENELEC approved IFT 3000.

WARNING

Install all protective equipment covers and safety ground leads after troubleshooting. Failure to install covers and ground leads could result in serious injury or death.

E-3 OVERVIEW

The IFT troubleshooting section describes how to identify and isolate faults which may develop in the IFT.

E-4 IFT TROUBLESHOOTING

IFT troubleshooting is achieved by determining the functional status of the microprocessor board and interpreting status displays on the front panel.

a. Microprocessor Status LED

The microprocessor board includes an LED to aid in isolating equipment faults. LED indications are as follows:

1. LED OFF. IFT failure or power is removed; refer to Troubleshooting Flowchart #1 (Figure E-3).
2. LED ON - STEADY. Heater system failure; refer to Troubleshooting Flowchart #2 (Figure E-4).
3. LED ON - FLASHING. Microprocessor normal.

b. Equipment Status (LCD) Displays

The status line of the GUI equipped IFT will display one of the following conditions. To troubleshoot an equipment fault, refer to COMPONENT FAILURE indications applicable to the display message (SYMPTOM) in Table E-2.

1. OK - The system is operating normally.
2. CAL - The system is currently undergoing calibration.
3. C Err - An error was detected during the calibration process.
4. H Err - There is a fault within the heater system.
5. TGLow - There is no test gas pressure.
6. HiO_2 - The O_2 value is above the high alarm limit.
7. LoO_2 - The O_2 value is below the low alarm limit.
8. R Hi - The cell resistance is above the high limit.
9. Off - The probe has been turned OFF because the IFT cannot control the heater temperature.
10. PRBE - The probe is disconnected, cold, or leads are reversed.

EX

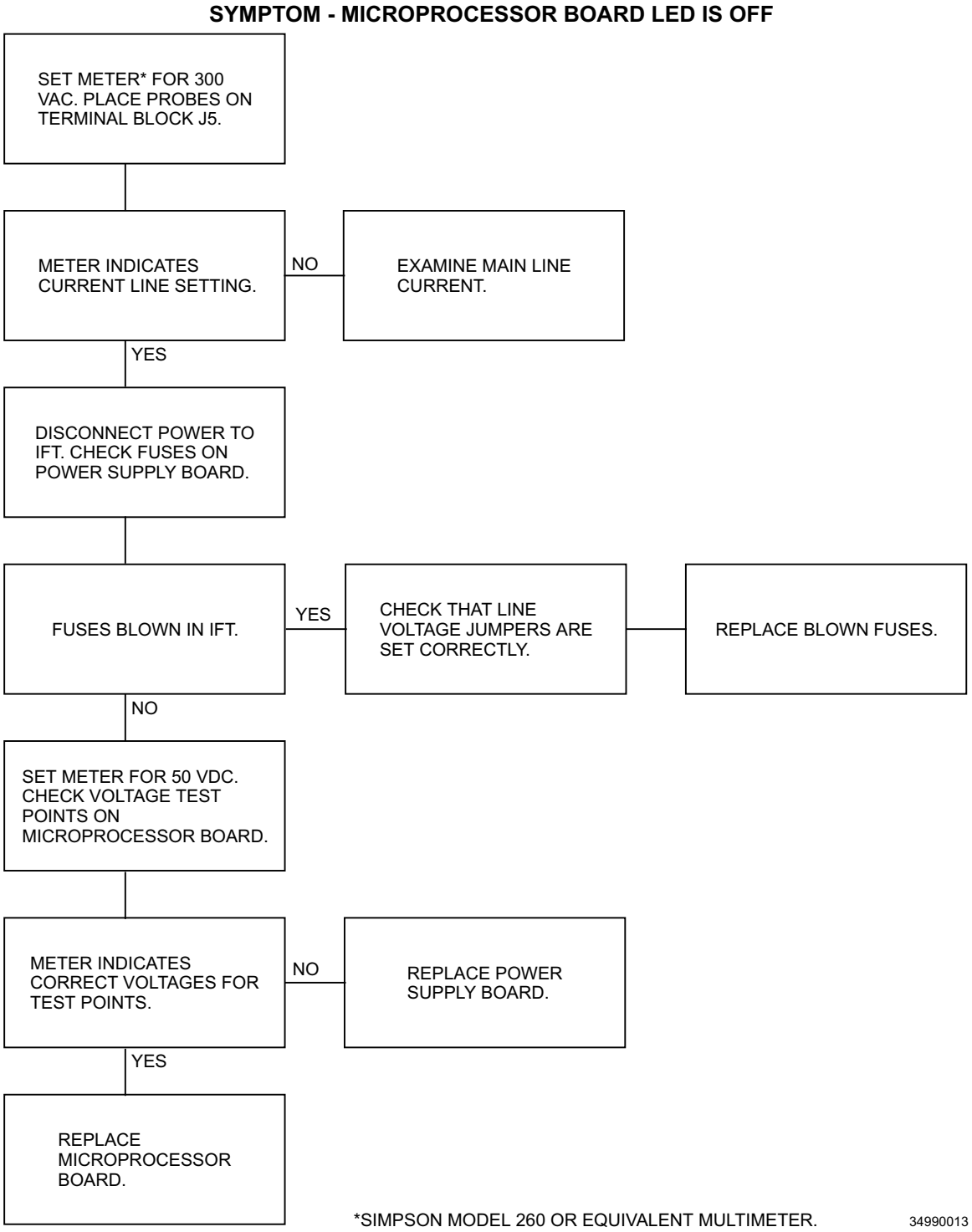

Figure E-3. IFT Troubleshooting Flowchart, #1

SYMPTOM - MICROPROCESSOR BOARD LED IS STEADY ON

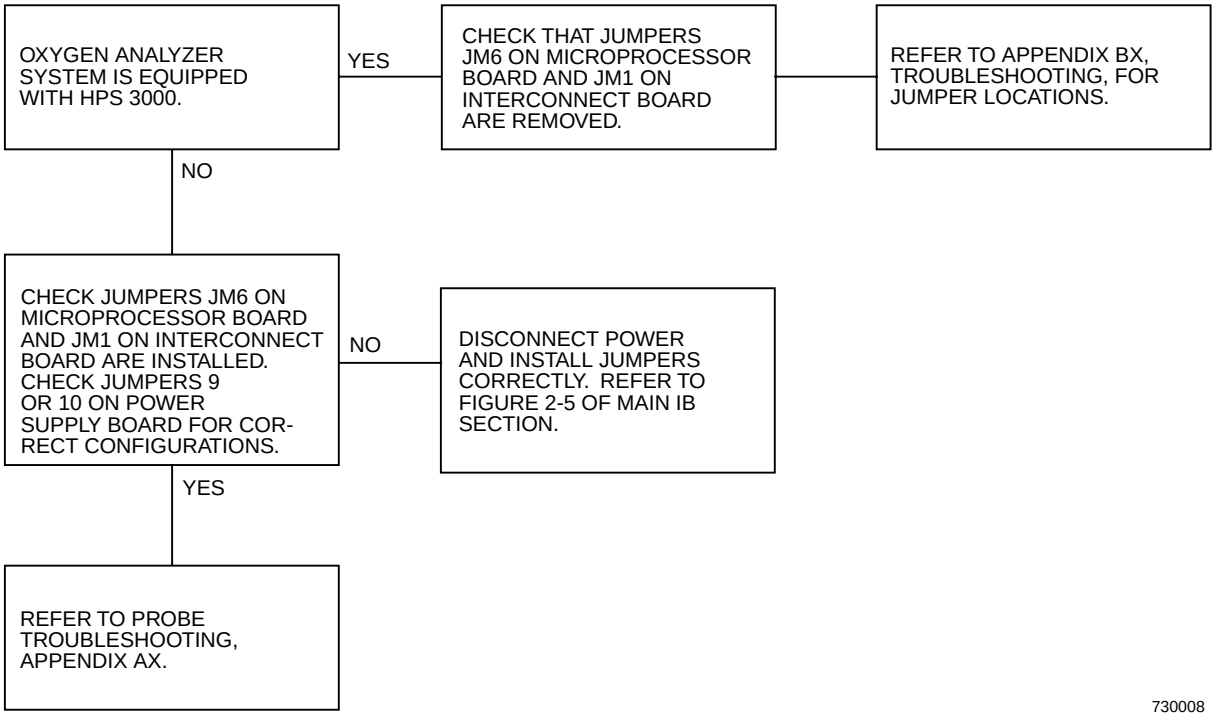

Figure E-4. IFT Troubleshooting Flowchart, #2

END OF FLOWCHART

SYMPTOM - GENERAL USER INTERFACE OR LED DISPLAY PANEL NOT FUNCTIONING

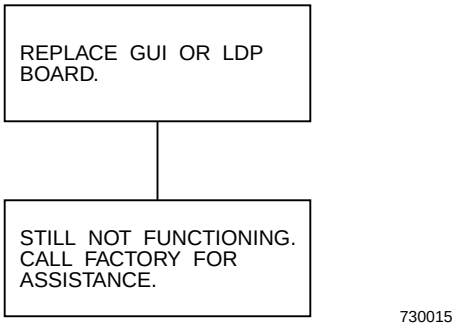

Figure E-5. IFT Troubleshooting Flowchart, #3

EX

Table E-2. GUI Equipped IFT Fault Finding

SYMPTOM	COMPONENT FAILURE
1. Display is blank.	Possible failure within IFT. Check LED on microprocessor board.
2. C Err is displayed.	Repeat calibration sequence. If error persists, troubleshoot major components.
3. H Err is displayed.	Ensure jumpers are set correctly on IFT. If system is equipped with HPS refer to Appendix BX, Troubleshooting, for additional troubleshooting procedures.
4. TGLow is displayed.	Possible failure within the MPS. Refer to Appendix DX, Troubleshooting, for additional troubleshooting procedures.
*5. HiO_2 is displayed.	Possible failure within the probe. Ensure the high alarm level has been entered correctly. Refer to Appendix AX, Troubleshooting, for additional troubleshooting procedures.
*6. LoO_2 is displayed.	Possible failure within the probe. Ensure the low alarm parameter has been entered correctly. Refer to Appendix AX, Troubleshooting, for additional troubleshooting procedures.
7. R Hi is displayed.	Cell resistance has exceeded upper limit. Ensure resistance value has been entered correctly. Refer to Appendix AX, Troubleshooting, for additional troubleshooting procedures.
8. Off	The probe has been turned OFF because the IFT cannot control the heater temperature.
9. PRBE	The probe is disconnected, cold, or leads are reversed.

*HiO_2 and LoO_2 can occur in the system without system failure.

MAINTENANCE AND SERVICE

WARNING

See Safety Data Sheet 1M03296 for safety related information.

WARNING

Install all protective equipment covers and safety ground leads after equipment repair or service. Failure to install covers and ground leads could result in serious injury or death.

E-5 OVERVIEW

This section describes service and routine maintenance of the Intelligent Field Transmitter. Replacement parts referred to are available from Rosemount. Refer to Replacement Parts for part numbers and ordering information.

E-6 FUSE REPLACEMENT

Power supply board (4, Figure E-6) contains four identical 5 amp fuses (5 amp anti-surge, Type T to IEC127, Rosemount part number 1L01293H02). Perform the following procedure to check or replace a fuse. In addition, 2 additional 5 amp fuses (F1 and F2) are included if the unit has an internal heater installed.

a. Follow the Power Down procedure outlined in Safety Data Sheet 1M03296 and the official "codes of practice" for your country of installation.

b. Open cover door (17) of the IFT by removing securing screws (23).

c. Open liner assembly front panel (22) of the IFT by turning 1/4 turn fastener (21) counterclockwise.

d. Unscrew fuse holder top and remove the fuse (5). After checking or replacing a fuse, reinstall the fuse holder top.

e. Close liner assembly front panel (22) and secure by turning 1/4 turn fastener (21) clockwise.

f. Close cover door (13) and secure with securing screws (23).

E-7 TRANSFORMER REPLACEMENT

WARNING

See Safety Data Sheet 1M03296 for safety related information.

a. Follow the Power Down procedure outlined in Safety Data Sheet 1M03296 and the official "codes of practice" for your country of installation.

b. Open cover door (17) of the IFT by removing securing screws (23).

c. Open liner assembly front panel (22) of the IFT by turning 1/4 turn fastener (21) counterclockwise.

d. Disconnect cable (1) from the receptacle on microprocessor board (16). Disconnect GUI assembly cable or LDP assembly cable from receptacles on microprocessor board if IFT is equipped with GUI or LDP.

e. Carefully tagging wires, remove the wires from terminal strip on interconnect board (14).

f. Remove mounting plate (17) by removing four screws (6) and washers (7) from liner assembly (9).

g. Disconnect transformer cable plugs from the receptacles on power supply board (4).

h. Remove transformer (10) from the enclosure base (11) by removing four screws (6).

i. Attach new transformer to the enclosure base (11) with four screws (6).

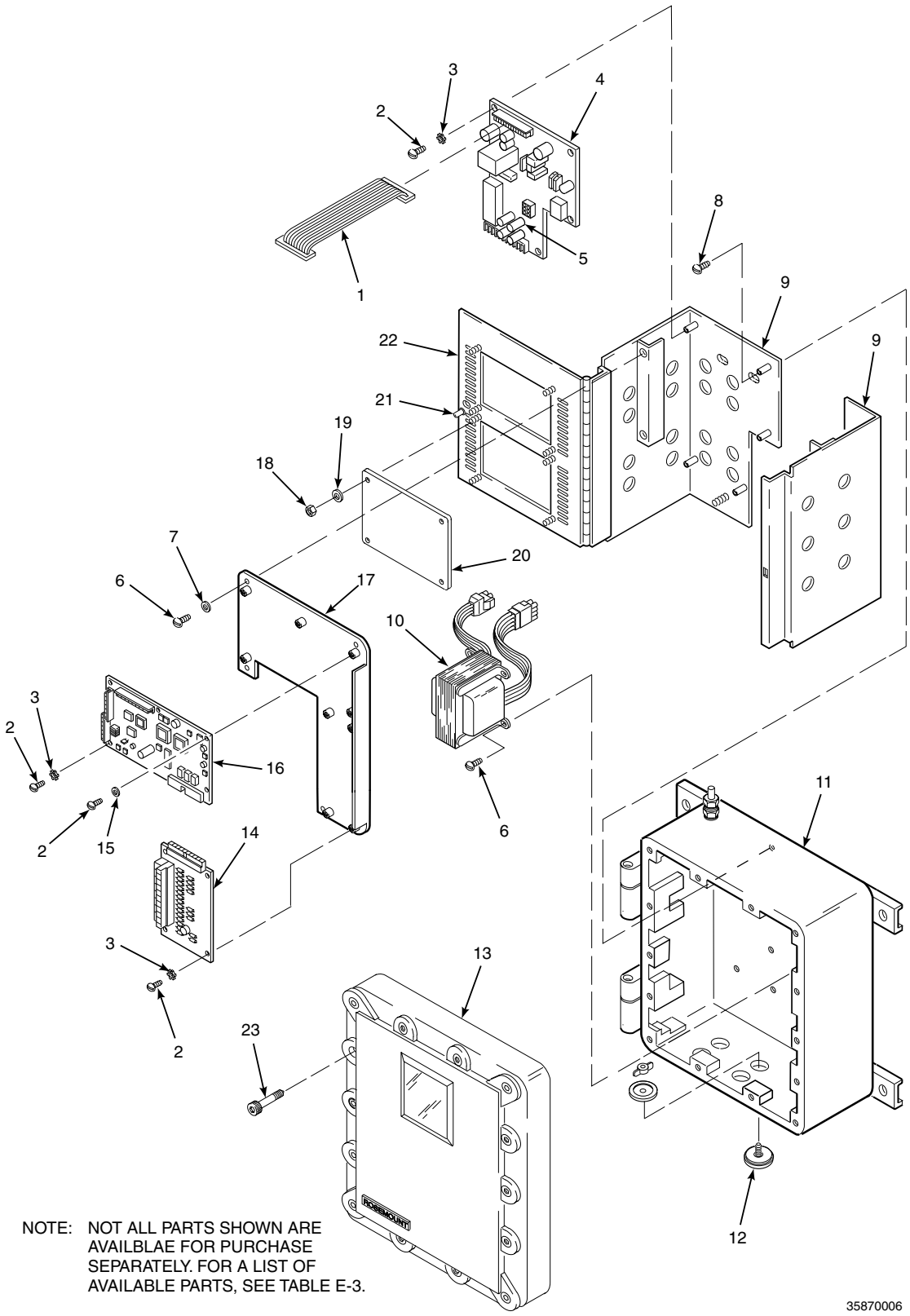

NOTE: NOT ALL PARTS SHOWN ARE AVAILBLAE FOR PURCHASE SEPARATELY. FOR A LIST OF AVAILABLE PARTS, SEE TABLE E-3.

Figure E-6. Intelligent Field Transmitter, Exploded View

LEGEND FOR FIGURE 3-1

1. Cable
2. Machine Screw, M3 x 8 mm
3. Lockwasher, 3 mm
4. Power Supply Board
5. Fuses, 5 amp
6. Machine Screw, M5 x 8 mm
7. Lockwasher, 5 mm
8. Machine Screw, #10 x 0.38
9. Liner Assembly
10. Transformer
11. Enclosure
12. Plug
13. Cover Door
14. Interconnect Board
15. Plastic Washer, 3mm
16. Microprocessor Board
17. Mounting Plate
18. Hex Nut, M3
19. Flat Washer, 3 mm
20. Cover Plate
21. 1/4 Turn Fastener
22. Linear Assembly Front Panel
23. Securing Screws

j. Connect the transformer cable plugs from transformer (10) to the receptacles on power supply board (4).

k. Reinstall mounting plate (17) to the liner assembly with four screws (6) and washers (7).

l. Reinstall the wires to the terminal strip on interconnect board (14) as was noted in step e.

m. Connect cable (1) to the receptacle on microprocessor board (16). Reconnect GUI assembly cable or LDP assembly cable to receptacles on microprocessor board if IFT is equipped with GUI or LDP.

n. Close liner assembly front panel (22) and secure by turning 1/4 turn fastener (21) clockwise.

o. Close cover door (17) and secure with securing screws (23).

E-8 POWER SUPPLY BOARD REPLACEMENT

WARNING

See Safety Data Sheet 1M03296 for safety related information.

a. Follow the Power Down procedure outlined in Safety Data Sheet 1M03296 and the official "codes of practice" for your country of installation.

b. Open cover door (17) of the IFT by removing securing screws (23).

c. Open liner assembly front panel (22) of the IFT by turning 1/4 turn fastener (21) counterclockwise.

d. Disconnect cable (1) from the receptacle on microprocessor board (16). Disconnect GUI assembly cable or LDP assembly cable from receptacles on microprocessor board if IFT is equipped with GUI or LDP.

e. Carefully tagging wires, remove the wires from terminal strip on interconnect board (14).

f. Remove mounting plate (17) by removing four screws (6) and washers (7) from liner assembly (9).

g. Disconnect the transformer cable plugs from the receptacles on power supply board (4).

h. Carefully tagging wires, remove the wires from terminal strips J5 and J6 on power supply board (4).

i. Remove power supply board (4) from liner assembly (9) by removing five screws (2) and washers (3).

j. Attach new power supply board (4) to liner assembly (9) with five screws (2) and washers (3).

k. Reconnect the wires as noted in step h.

l. Connect the transformer cable plugs from transformer (10) to the receptacles on power supply board (4).

m. Reinstall mounting plate (17) to liner assembly (9) with four screws (6) and washers (7).

n. Reconnect the wires to interconnect board (14) as noted in step e.

o. Connect cable (1) to the receptacle on microprocessor board (16). Reconnect GUI assembly cable or LDP assembly cable to receptacles on microprocessor board if IFT is equipped with GUI or LDP.

p. Close liner assembly front panel (22) and secure by turning 1/4 turn fastener (21) clockwise.

q. Close cover door (13) and secure with securing screws (23).

E-9 MICROPROCESSOR BOARD REPLACEMENT

WARNING

See Safety Data Sheet 1M03296 for safety related information.

a. Follow the Power Down procedure outlined in Safety Data Sheet 1M03296 and the official "codes of practice" for your country of installation.

b. Open cover door (13) of the IFT by removing securing screws (23).

c. Open liner assembly front panel (22) of the IFT by turning 1/4 turn fastener (21) counterclockwise.

d. Disconnect cable (1) from the receptacle on microprocessor board (16). Disconnect GUI assembly cable or LDP assembly cable from receptacles on microprocessor board if IFT is equipped with GUI or LDP.

CAUTION

Pull up very carefully on the microprocessor board to ensure that none of the pins in the connection between the microprocessor board and interconnect board are damaged.

e. Remove microprocessor board (16 by removing five screws (2), three washers (3), and two plastic washers (15).

f. Attach the new microprocessor board to the interconnect board by carefully lining up the pins on the plug.

g. Attach microprocessor board (16) to mounting plate (17) with five screws (2), three washers (3), and two plastic washers (15). Use the plastic washers on MH2 and MH3 located on top of the microprocessor board.

h. Reconnect cable (1) to receptacle on microprocessor board. Reconnect GUI assembly cable or LDP assembly cable to receptacles on microprocessor board if IFT is equipped with GUI or LDP.

i. Close liner assembly front panel (22) and secure by turning 1/4 turn fastener (21) clockwise.

j. Close cover door (13) and secure with securing screws (23).

E-10 INTERCONNECT BOARD REPLACEMENT

WARNING

See Safety Data Sheet 1M03296 for safety related information.

a. Follow the Power Down procedure outlined in Safety Data Sheet 1M03296 and the official "codes of practice" for your country of installation.

b. Open cover door (13) of the IFT by removing securing screws (23).

c. Open liner assembly front panel (22) of the IFT by turning 1/4 turn fastener (21) counterclockwise.

d. Carefully tagging wires, remove the wires from terminal strip on interconnect board (14).

CAUTION

Pull down very carefully on the interconnect board to ensure that none of the pins in the connection between the microprocessor board and interconnect board are damaged.

e. Remove interconnect board (14) by removing four screws (2) and washers (3).

f. Attach new interconnect board (14) to the microprocessor board by carefully lining up the pins on the plug.

g. Attach interconnect board (14) to mounting plate (17) with four screws (2) and washers (3).

h. Reconnect wires to the terminal strip as noted in step b.

i. Close liner assembly front panel (22) and secure by turning 1/4 turn fastener (21) clockwise.

j. Close cover door (13) and secure with securing screws (23).

E-11 GUI ASSEMBLY REPLACEMENT

Replacement instructions are provided for GUI and LDP equipped systems. If the system is not equipped with both a GUI and LDP display, refer to Figure E-7.

WARNING

See Safety Data Sheet 1M03296 for safety related information.

a. Follow the Power Down procedure outlined in Safety Data Sheet 1M03296 and the official "codes of practice" for your country of installation.

EX

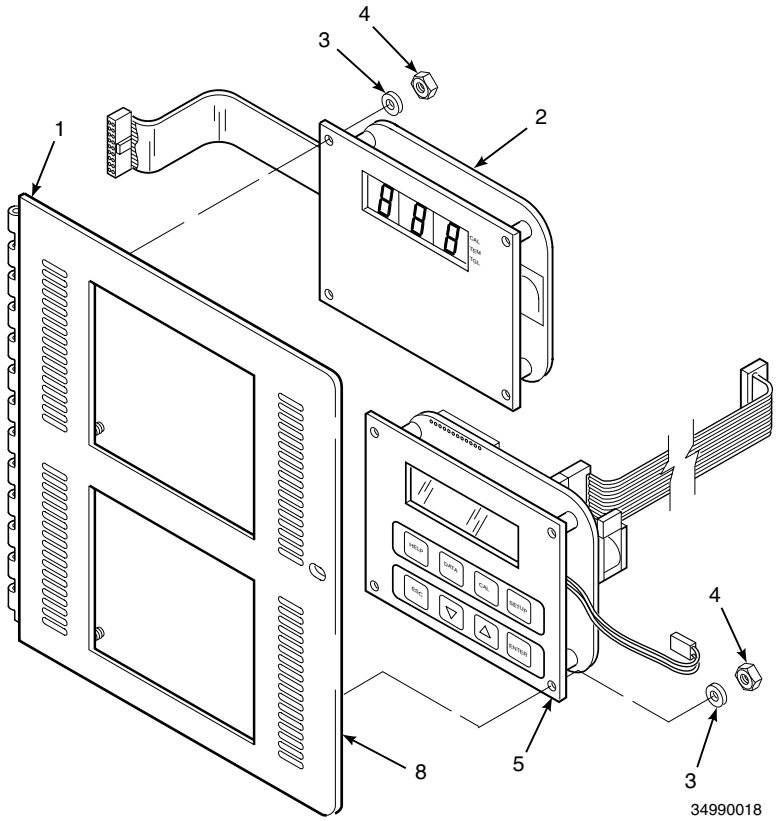

1. Liner Assembly Front Panel
2. LDP Assembly (without keypad)
3. Flat Washer 3 mm
4. Hex Nut M3
5. GUI Assembly
6. Cover Plate
7. LDP Assembly (with keypad)
8. 1/4 Turn Fastener

A. IFT Front Panel with GUI and LDP

Figure E-7. IFT Front Panel, Exploded View (Sheet 1 of 2)

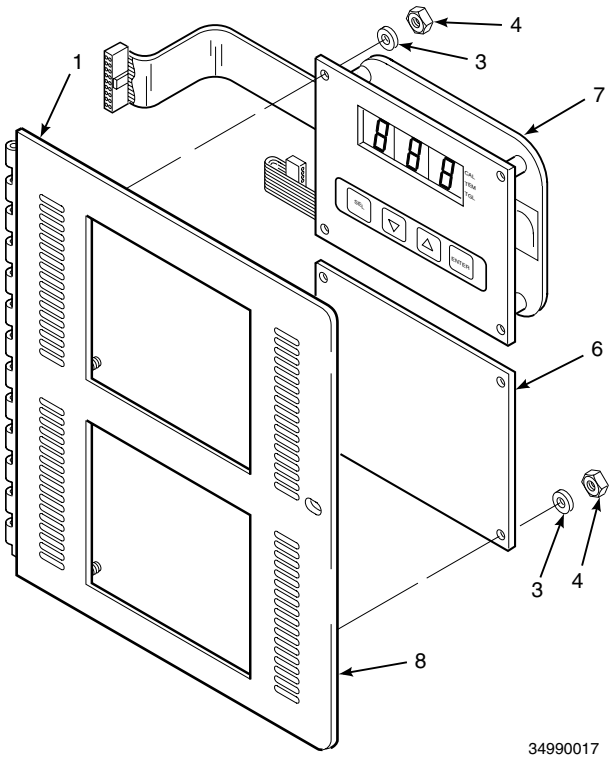

1. Liner Assembly Front Panel
2. LDP Assembly (without keypad)
3. Flat Washer 3 mm
4. Hex Nut M3
5. GUI Asembly
6. Cover Plate
7. LDP Assembly (with keypad)
8. 1/4 Turn Fastener

B. IFT Front Panel with LDP

Figure E-7. IFT Front Panel, Exploded View (Sheet 2 of 2)

b. Open cover doors (13, Figure E-6) of the IFT by removing securing screws (23).

c. Open liner assembly front panel (1, Figure E-7) of the IFT by turning 1/4 turn fastener (8) counterclockwise.

d. Disconnect GUI assembly ribbon cable from microprocessor board (16, Figure E-6).

e. Remove GUI assembly (5, Figure E-7) by removing four hex nuts (4) and washers (3).

f. Attach new GUI assembly with four hex nuts (4) and washers (3).

g. Reconnect GUI assembly ribbon cable to microprocessor board (16, Figure E-6).

h. Close liner assembly front panel (1, Figure E-7) and secure by turning 1/4 turn fastener (8) clockwise.

i. Close cover door (13, Figure E-6) and secure with securing screws (23).

E-12 LDP ASSEMBLY REPLACEMENT

Replacement instructions are provided for GUI and LDP equipped systems. If the system is not equipped with both a GUI and LDP display, refer to Figure E-7.

WARNING

Consult Safety Data Sheet 1M03296 before performing any work on the CENELEC approved IFT 3000.

a. Follow the Power Down procedure outlined in Safety Data Sheet 1M03296 and the official "codes of practice" for your country of installation.

b. Open cover door (13) of the IFT by removing securing screws (23).

c. Open liner assembly front panel (1, Figure E-7) of the IFT by turning 1/4 turn fastener (8) counterclockwise.

d. Disconnect LDP assembly ribbon cable(s) from microprocessor board (16, Figure E-6).

e. Remove LDP assembly (2 or 7, Figure E-7) by removing four hex nuts (4) and washers (3).

f. Attach new LDP assembly with four hex nuts (4) and washers (3).

g. Reconnect LDP assembly ribbon cable(s) to microprocessor board (16, Figure E-6).

h. Close liner assembly front panel (1) and secure by turning 1/4 turn fastener (8) clockwise.

i. Close cover door (13, Figure E-6) and secure with securing screws (23).

REPLACEMENT PARTS

Table E-3. Replacement Parts for the Intelligent Field Transmitter

FIGURE and INDEX No.	PART NUMBER	DESCRIPTION
E-6, 10	1N04946G01	Transformer
E-6, 14	3D39120G01	Interconnect Board
E-6, 4	3D39122G01*	Power Supply Board
E-6, 16	3D39118G01	Microprocessor Board
E-7, 5	1N04956G01	GUI Assembly
E-7, 7	1N04959G02	LDP Assembly with keypad
E-7, 2	1N04959G01	LDP Assembly without keypad
E-6, 5	1L01293H02	Fuse, 5A @ 250 Vac, anti-surge, case size; 5 x 20 mm, type T to IEC127, Schurter

*Specify line voltage and probe type when ordering.

NOTE: The replacement parts listed above must be obtained only from the manufacturer or his agent.

APPENDIX JX, REV. 1.0
HART COMMUNICATOR MODEL 275D9E
IFT 3000 APPICATIONS

DESCRIPTION

WARNING

See Safety Data Sheet 1M03296 for safety related information.

J-1 COMPONENT CHECKLIST OF TYPICAL HART® COMMUNICATOR PACKAGE

A typical Model 275D9E HART® Communicator package should contain the items shown in Figure J-1, with the possible exception of options. If a rechargeable NiCad battery pack has been selected, at least one spare battery pack (per HART Communicator) is recommended.

J-2 UNIT OVERVIEW.

a. Scope

This Instruction Bulletin supplies details needed to install and operate the HART® Communicator in relation to the World Class 3000 Intelligent Field Transmitter. Information on troubleshooting the communicator is also included.

b. Device Description

The HART (Highway Addressable Remote Transducer) Communicator is a hand-held communications interface device. It provides a common communications link to all microprocessor-based instruments which are HART compatible. The hand-held communicator contains an 8 x 21 character liquid crystal display and 25 keys. A pocket-sized manual, included with the HART Communicator, details the specific functions of all keys.

To interface with the IFT 3000, the HART Communicator requires a termination point along the 4-20 mA current loop, and a minimum load resistance of 250 ohms between the communicator and the power supply. The HART Communicator accomplishes its task by use of a frequency shift keying (FSK) technique. With the use of FSK, high-frequency digital communication signals are superimposed on the 4-20 mA transmitter current loop. The communicator does not disturb the 4-20 mA signal, since no net energy is added to the loop.

The HART Communicator may be interfaced with a personal computer, providing special software has been installed. To connect the HART Communicator to a PC, an interface adaptor is required. Refer to the proper HART Communicator documentation in regard to the PC interface option.

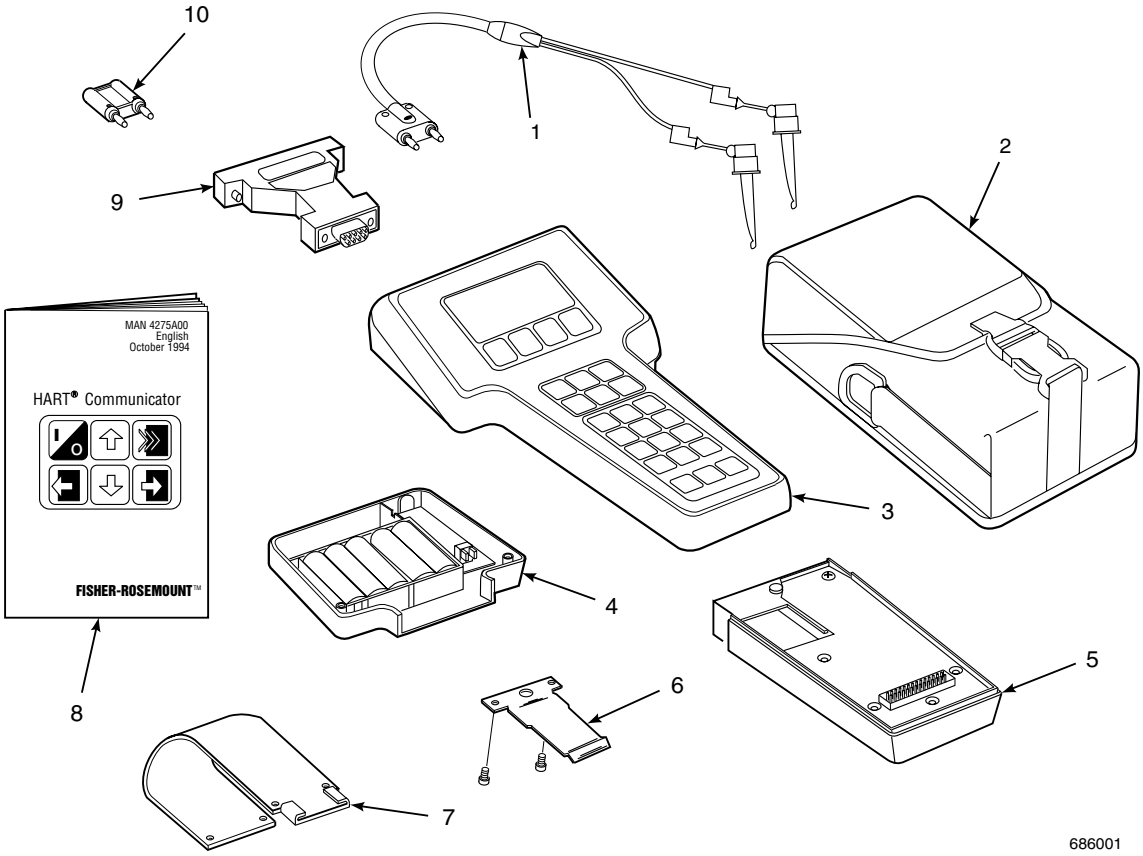

1. Lead Set (with Connectors)
2. Carrying Case
3. Communicator
4. AA Alkaline Battery Pack, or
   Rechargeable NiCad Battery Pack (Option)
5. Memory Module
6. Belt Clip (with screws)
7. Hanger (mounts on belt clip, Option)
8. Pocket-sized Instruction Manual
9. PC Interface Adaptor (Option)
10. Load Resistor, 250 (Option)

Figure J-1. Typical HART® Communicator Package, Model 275D9E

J-3 SPECIFICATIONS

HART Communicator Specifications, Table J-1, contains physical, functional, and environmental information about the communicator. Use Table J-1 to ensure the unit is operated in suitable environments, and that the proper battery charging options are used.

Table J-1. HART Communicator Specifications

Physical Specifications	
Display	8-line liquid crystal display with a line width of 21 characters (128 x 64 pixels)
Keypad	Membrane design with tactile feedback. 25 keys include: 6 action keys 4 software-defined function keys 12 alphanumeric keys 3 shift keys
Weight	≈ 3 lbs (1.4 kg) including batteries
Functional Specifications	
Memory	Nonvolatile memory. Retains memory when the communicator is not powered.
Program (and Device) Descriptions	1.25 MB
Transmitter Data	2 K
Power Supply	Five AA 1.5 volt batteries. A rechargeable Nickel-Cadmium battery pack is optional.
Battery Charger Options	110/120 Vac, 50/60 Hz, U.S. plug 220/230 Vac, 50 Hz, European plug 220/230 Vac, 50 Hz, UK plug
Microprocessors	32-bit Motorola type 68331 8-bit Motorola type 68HC05
Connections	Lead set: Two 4 mm banana plugs Battery charger: 2.5 mm jack Serial port: PC connection through optional adaptor Memory Module: 26 pin, 0.1 inch Berg connector
Environmental Specifications	
Operating Limits	32° to 122°F (0° to 50°C)
Storage Limits	-4° to 158°F (-20° to 70°C)
Humidity	0 to 95% relative humidity under non-condensing conditions below 104°F (40°C) without error
Hazardous Locations	CENELEC - Intrinsic Safety Certification
Certifications	Factory Mutual (FM) - Intrinsic Safety Approval Canadian Standards Association (CSA) - Intrinsic Safety Approval

INSTALLATION

WARNING

Consult Safety Data Sheet 1M03296 before performing any work on the CENELEC approved IFT 3000.

WARNING

Install all protective equipment covers and safety ground leads after installation. Failure to install covers and ground leads could result in serious injury or death.

J-4 HART COMMUNICATOR SIGNAL LINE CONNECTIONS

The HART Communicator can connect to the IFT analog output signal line at any wiring termination point in the 4-20 mA current loop. There are two methods of connecting the HART Communicator to the signal line. For applications in which the signal line has a load resistance of 250 ohms or more, refer to method 1. For applications in which the signal line load resistance is less than 250 ohms, refer to method 2.

a. Method 1, For Load Resistance > 250 Ohms

Refer to Figure J-2 and the following steps to connect the HART Communicator to a signal line with 250 ohms or more of load resistance.

WARNING

HART connections must be made outside of the hazardous area. Because the HART option is not protected by energy limiting barriers, it must not be interfaced from within a hazardous area. The signal cables should be routed outside the hazardous area and the connections made external to the hazardous area.

WARNING

Explosions can result in death or serious injury. Do not make connections to the HART Communicator's serial port or NiCad recharger jack in an explosive atmosphere.

1. Program IFT analog output to 4-20 mA. Select the current mode using the current/voltage selector switch on the microprocessor board in the IFT.

2. Using the supplied lead set, connect the HART Communicator in parallel to the IFT 3000. Use any wiring termination points in the analog output 4-20 mA signal line.

b. Method 2, For Load Resistance < 250 Ohms

Refer to Figure J-3 and the following steps to connect the HART Communicator to a signal line with less than 250 ohms load resistance.

1. Program IFT analog output to 4-20 mA. Select the current mode using the current/voltage selector switch on the microprocessor board in the IFT.

2. At a convenient point, break the analog output 4-20 mA signal line and install the optional 250 ohm load resistor.

3. Plug the load resistor into the loop connectors (located on the rear panel of the HART Communicator).

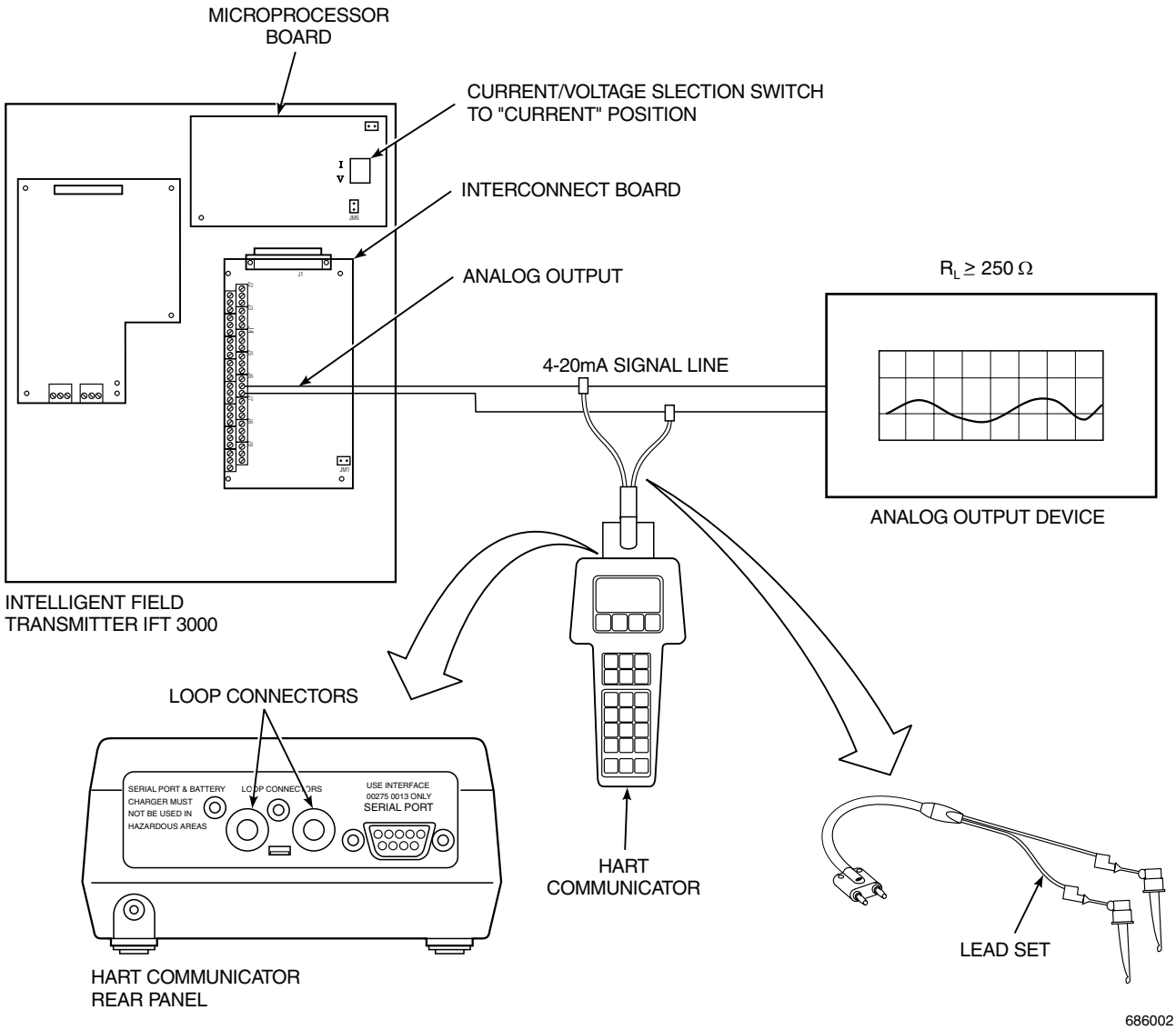

Figure J-2. Signal Line Connections, ≥ 250 Ohms Load Resistance

JX

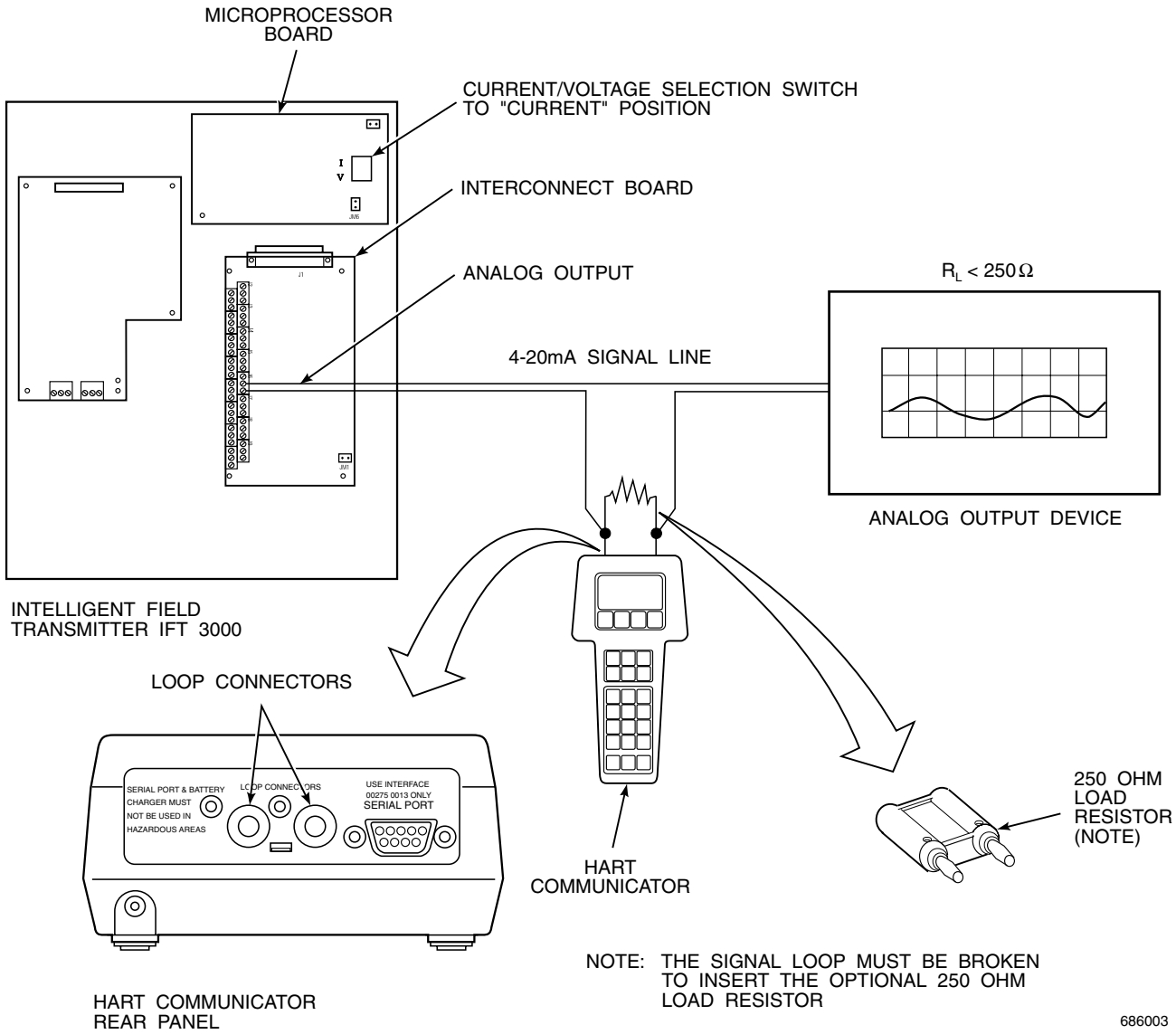

Figure J-3. Signal Line Connections, <250 Ohms Load Resistance

J-5 HART COMMUNICATOR PC CONNECTIONS

There is an option to interface the HART Communicator with a personal computer. Load the designated Cornerstone® software into the PC. Then, link the HART Communicator to the PC using the interface PC adaptor which connects to the serial port (on the communicator rear panel).

Refer to the proper HART Communicator documentation in regard to the PC interface option.

OPERATION

WARNING

See Safety Data Sheet 1M03296 for safety related information.

J-6 OFF-LINE AND ON-LINE OPERATIONS

The HART Communicator can be operated both off-line and on-line. Off-line operations are those in which the communicator is not connected to the IFT system. Off-line operations can include interfacing the HART Communicator with a PC (refer to applicable HART Documentation regarding HART/PC applications).

In the on-line mode, the communicator is connected to the 4-20 mA analog output signal line. The communicator is connected in parallel to the IFT, or in parallel to the 250 ohm load resistor.

The opening menu (displayed on the LCD) is different for on-line and off-line operations. When powering up a disconnected (off-line) communicator, the LCD will display the Main Menu. When powering up a connected (on-line) communicator, the LCD will display the On-line Menu. Refer to the HART Communicator manual for detailed menu information.

J-7 MENU TREE FOR HART COMMUNICATOR/ WORLD CLASS 3000 IFT APPLICATIONS

This section consists of a menu tree for the HART Communicator. This menu is specific to IFT 3000 applications.

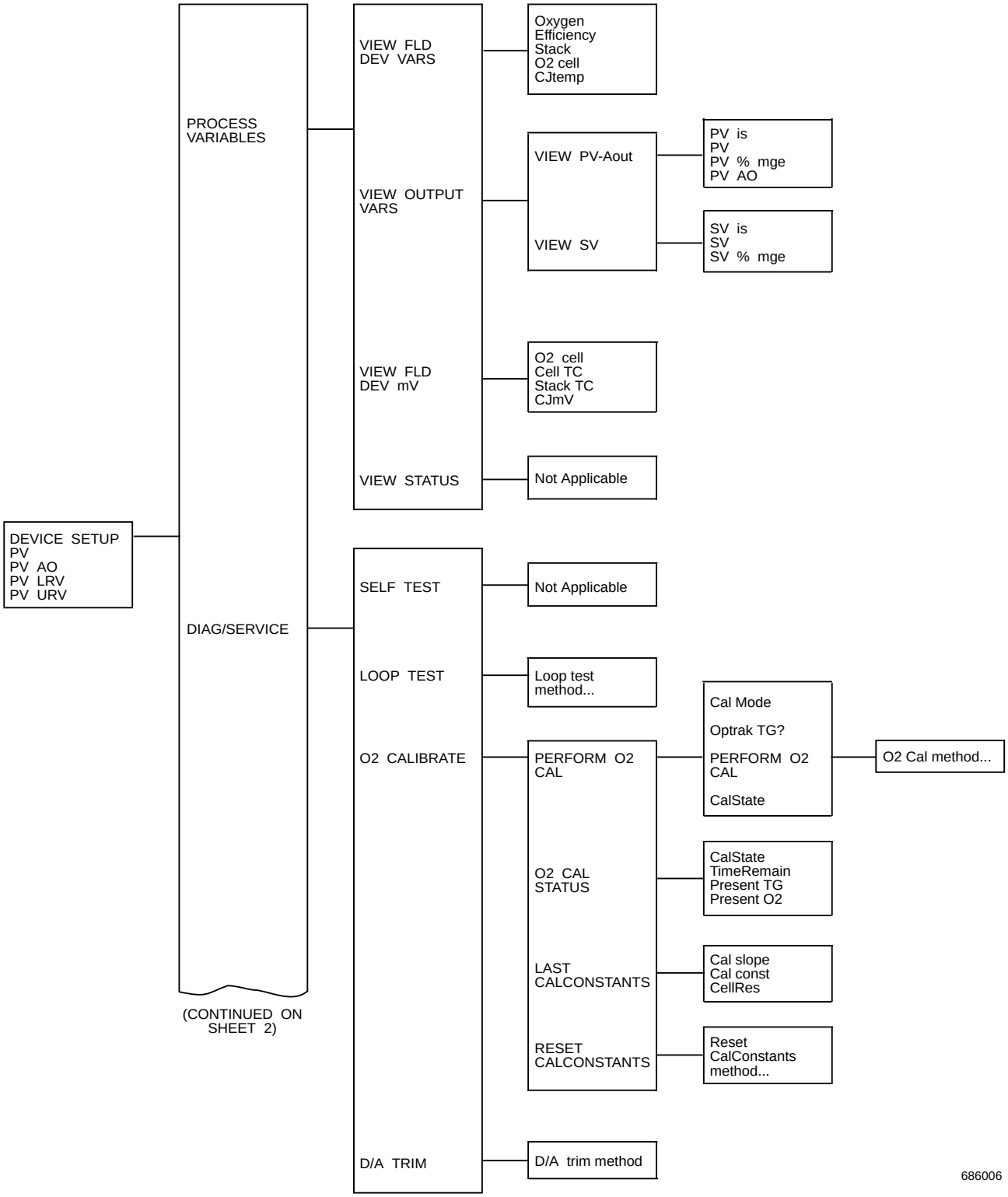

Figure J-4. Menu Tree for IFT 3000 Application (Sheet 1 of 3)

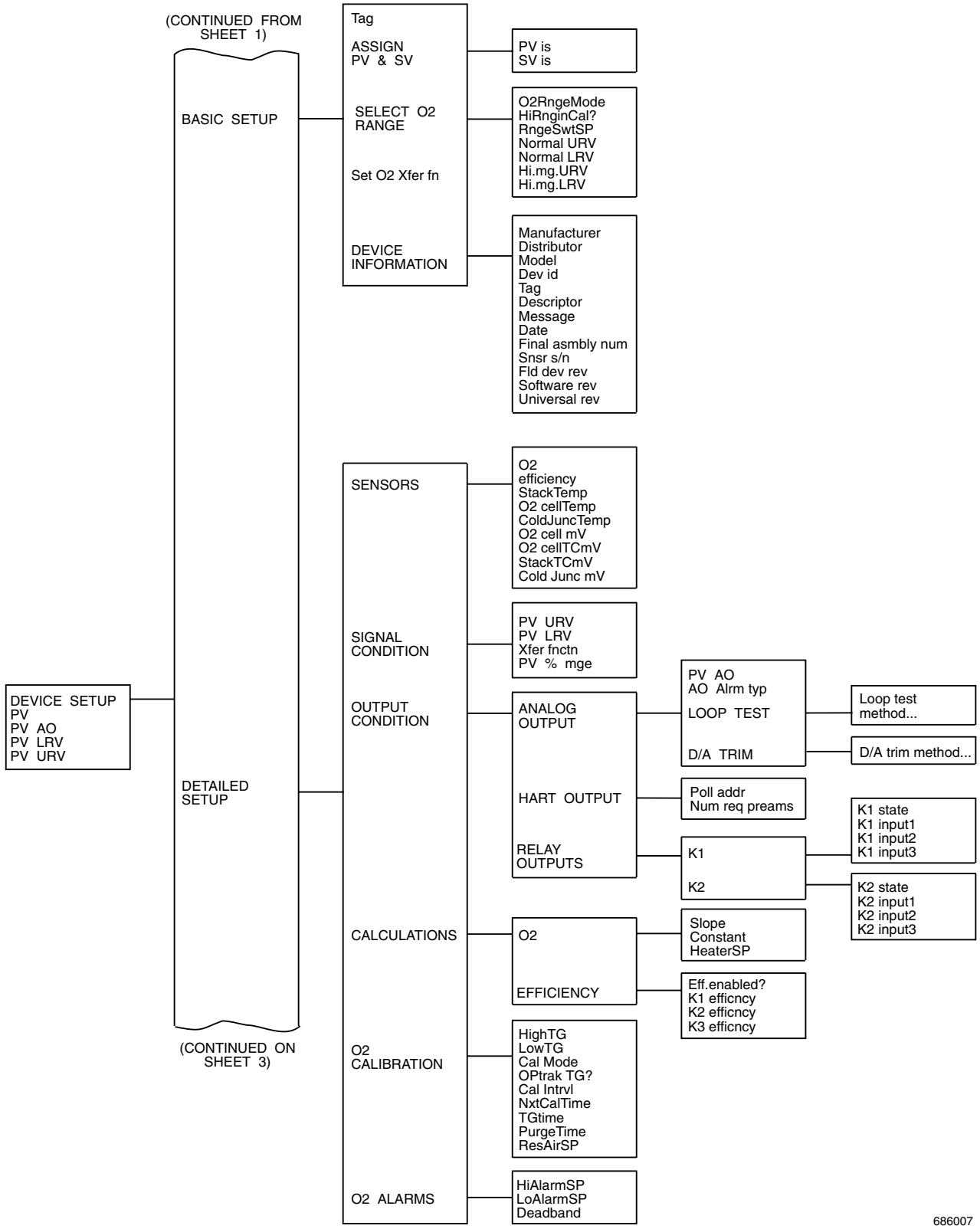

Figure J-4. Menu Tree for IFT 3000 Application (Sheet 2 of 3)

JX

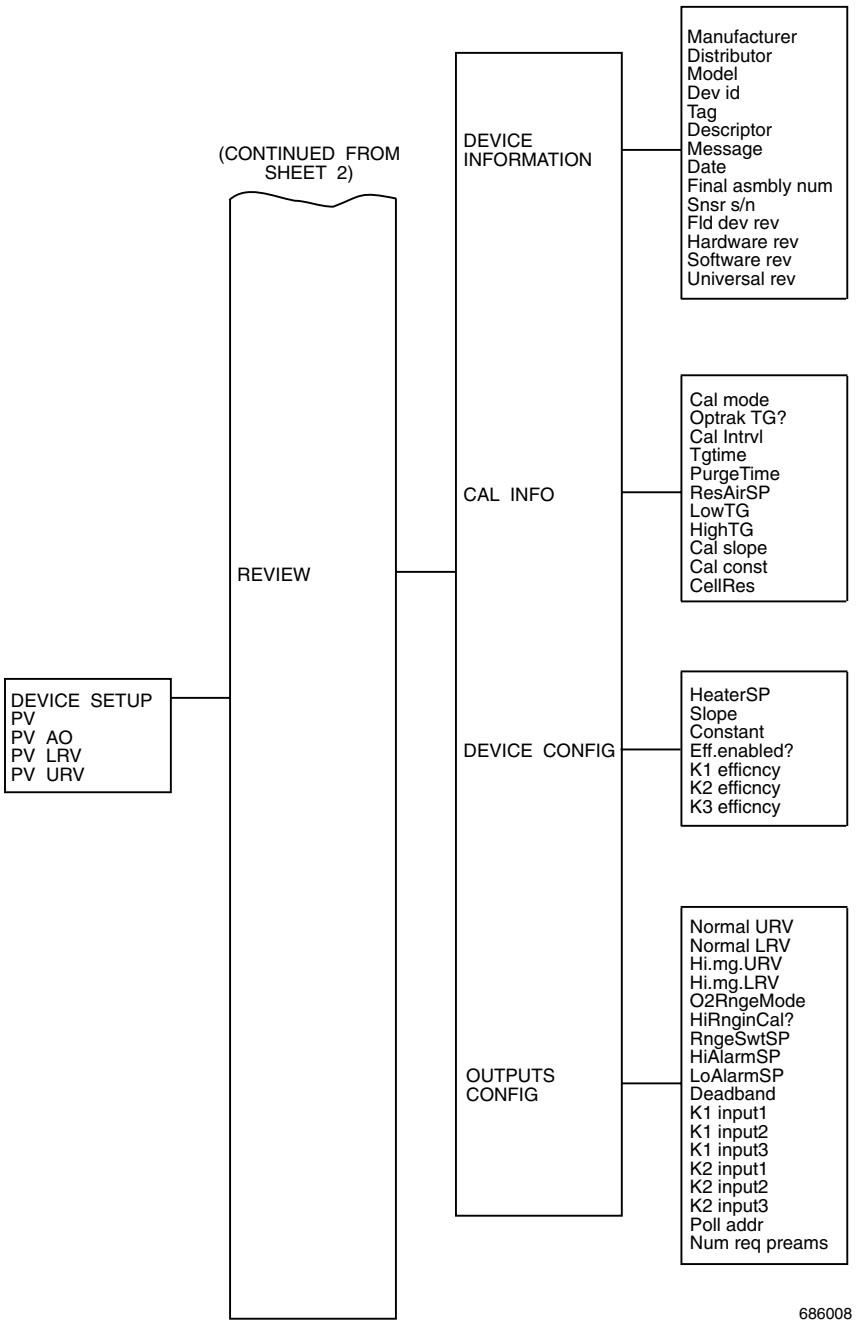

Figure J-4. Menu Tree for IFT 3000 Application (Sheet 3 of 3)

TROUBLESHOOTING

WARNING

Consult Safety Data Sheet 1M03296 before performing any work on the CENELEC approved IFT 3000.

WARNING

Install all protective equipment covers and safety ground leads after trouble-shooting. Failure to install covers and ground leads could result in serious injury or death.

J-8 OVERVIEW

If the HART Communicator fails to function properly, verify that the unit's battery pack and memory module are correctly assembled to the communicator. Check the communicator's model number. For IFT applications, HART Communicator model number 275D9E must be used. If the HART Communicator model number is correct, and if it is properly assembled, the troubleshooting flowchart, Figure J-5, may be useful to find and correct problems.

J-9 TROUBLESHOOTING FLOWCHART

Refer to Figure J-5.

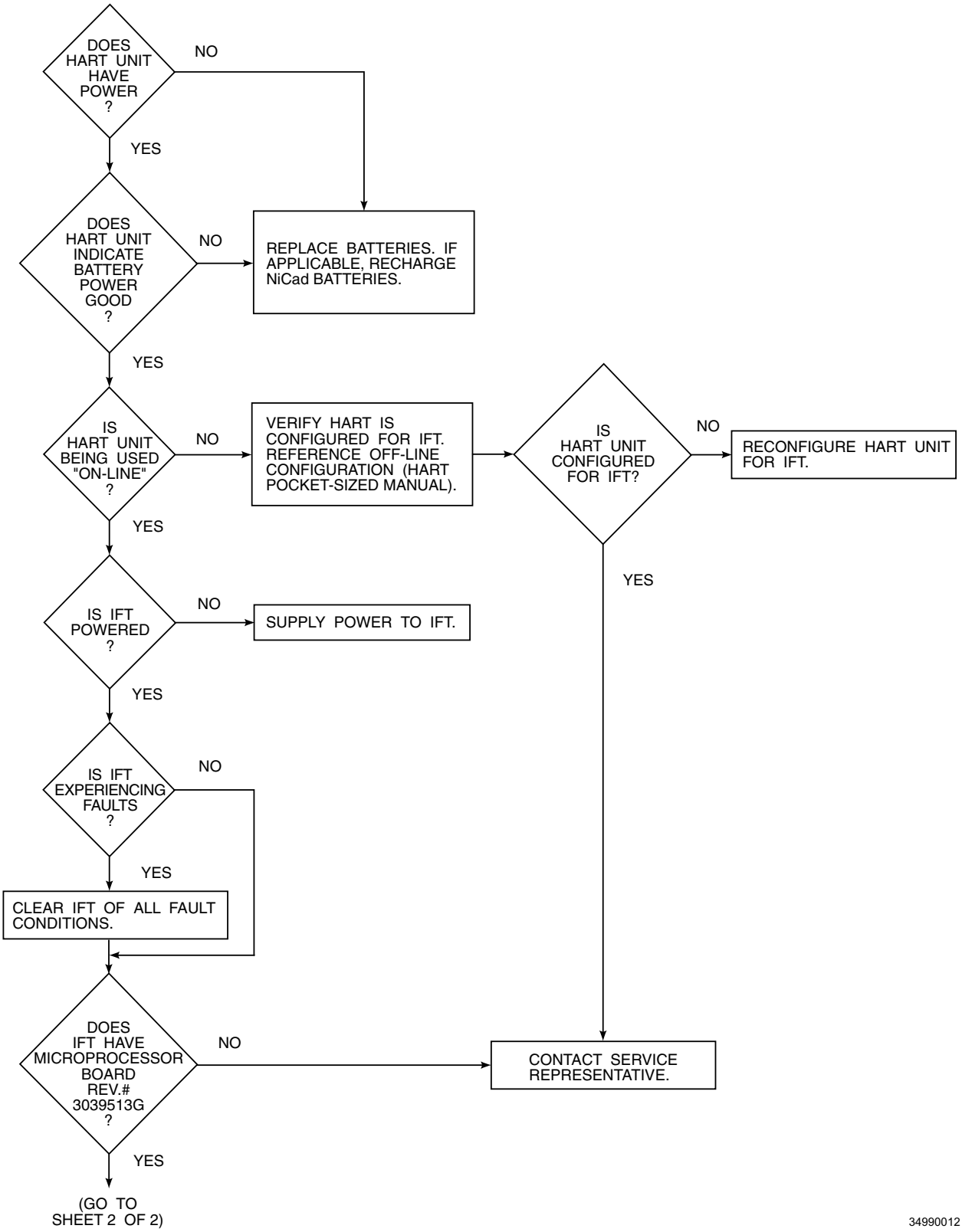

Figure J-5. Model Number 275D9E, Troubleshooting Flowchart (Sheet 1 of 2)

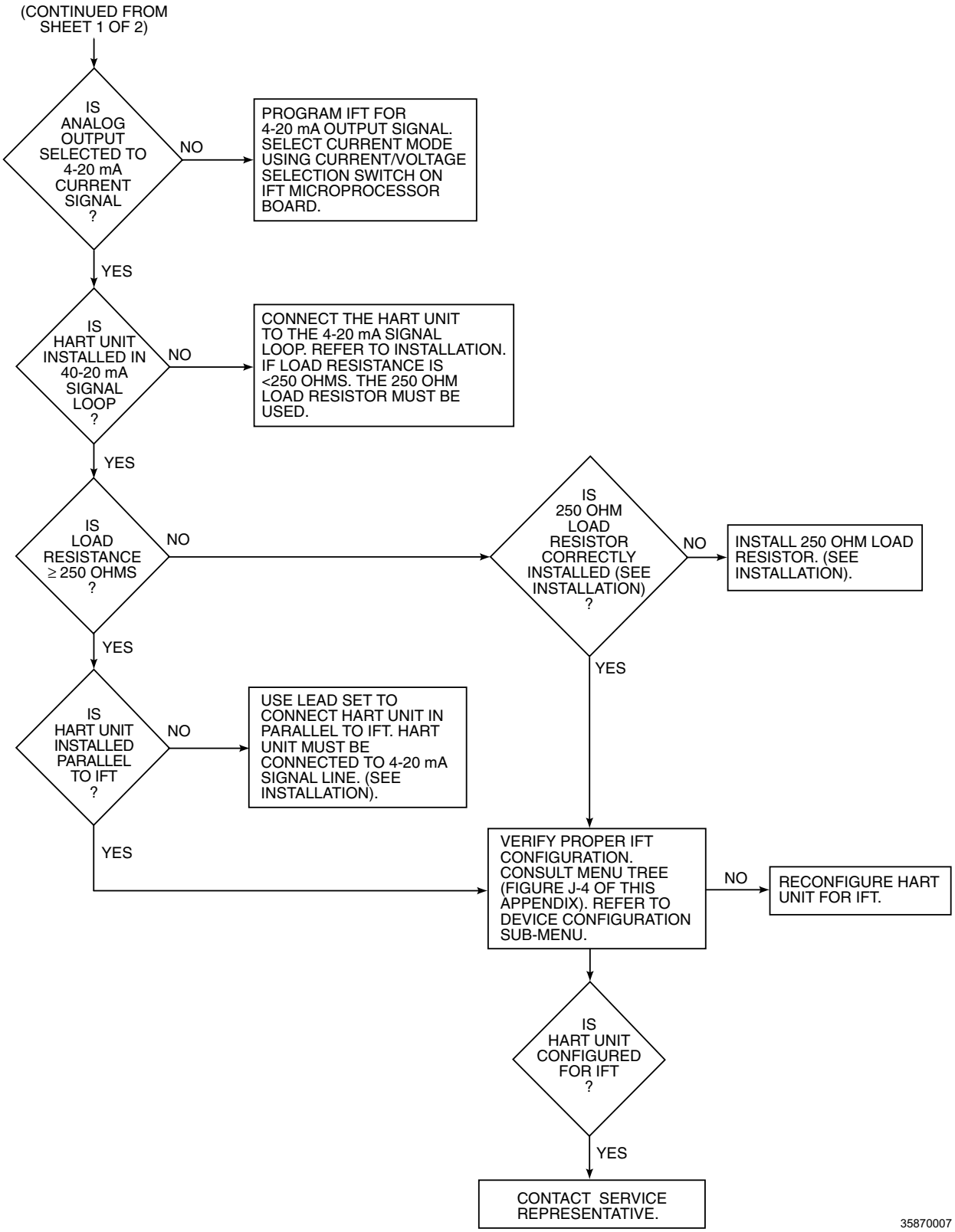

Figure J-5. Model Number 275D9E, Troubleshooting Flowchart (Sheet 2 of 2)

JX

SECTION 8
INDEX

This index is an alphabetized listing of parts, terms, and procedures having to do with the World Class 3000 Oxygen Analyzer with IFT 3000 Intelligent Field Transmitter. Every item listed in this index refers to a location in the manual by one or more page numbers.

S

V

Y

Z

SECTION 9
DRAWINGS AND SCHEMATICS

DEO 05867 14/12/93	1
DEO 05932 7-4-94	2
DEO 06435 17-5-95	3

THIS DRAWING AFFECTS CENELEC CERTIFICATION. NO REVISION ALLOWED WITHOUT CHECKING AND APPROVAL BY THE PRODUCT ENGINEER.

INTRODUCTION: THIS SAFETY DATA SHEET APPLIES TO INTELLIGENT FIELD TRANSMITTER (IFT3000), TYPE No. 1U05691. THE APPARATUS IS CERTIFIED EExd IIB T6.:
ISSeP CERTIFICATE No.
THIS APPARATUS HAS BEEN DESIGNED AND MANUFACTURED TO OPERATE SAFELY IN CERTAIN TYPES OF POTENTIALLY EXPLOSIVE ATMOSPHERES. IT IS ESSENTIAL THAT THE EQUIPMENT IS NOT TAMPERED WITH OR DAMAGED IN ANY WAY WHICH MIGHT LEAD TO A REDUCTION IN IT'S ABILITY TO OPERATE SAFELY IN SUCH POTENTIALLY EXPLOSIVE ATMOSPHERES. FOR YOUR OWN SAFETY AND THE SAFETY OF OTHERS PLEASE BRING ANY DAMAGE TO THE ATTENTION OF THE RESPONSIBLE AUTHORITY.

THIS APPARATUS HAS BEEN DESIGNED AND MANUFACTURED IN ACCORDANCE WITH EUROPEAN STANDARDS EN50014 & EN50018. INSTALLATION MAINTENANCE AND REPAIR MUST BE IN ACCORDANCE WITH THE OFFICIAL "CODES OF PRACTICE ON THE INSTALLATION AND MAINTENANCE OF ELECTRICAL APPARATUS IN POTENTIALLY EXPLOSIVE ATMOSPHERES" FOR THE COUNTRY OF INSTALLATION (EXAMPLE: BS5345 IN GREAT BRITAIN). ONLY APPROPRIATELY TRAINED PERSONNEL ARE AUTHORIZED TO PERFORM ANY WORK ON THIS EQUIPMENT. SUCH PERSONNEL IN ADDITION TO OPERATING TO THE ABOVE MENTIONED SAFETY STANDARDS, SHOULD TAKE NOTE OF THE FOLLOWING SAFETY ISSUES.

---

(1) FLAMEPROOF APPARATUS OR NON FLAMEPROOF APPARATUS:
THE ROSEMOUNT ENCODE SHEETS (PRODUCT ORDERING MATRIX) ALLOWS A CUSTOMER TO ORDER EITHER THE HAZARDOUS AREA (FLAMEPROOF) VERSION OF THE IFT3000 OR THE NON HAZARDOUS AREA VERSION. THE HAZARDOUS AREA VERSION HAS THE SYMBOL "EExd" ON THE APPARATUS NAMEPLATE. THE NON HAZARDOUS AREA VERSION DOES NOT. ENSURE THAT IF YOU HAVE RECEIVED THE NON HAZARDOUS AREA VERSION THAT YOU DO NOT INSTALL IT IN A POTENTIALLY EXPLOSIVE ENVIRONMENT.

(2) POWER DOWN PROCEDURE:

ISOLATION OF ELECTRICAL SUPPLY: THIS PIECE OF APPARATUS IS NOT ITSELF FITTED WITH A MEANS OF ELECTRICAL ISOLATION. CONSULT YOUR LOCAL CODES OF PRACTICE ON THE INSTALLATION AND MAINTENANCE OF ELECTRICAL APPARATUS IN POTENTIALLY EXPLOSIVE ATMOSPHERES (BS5345 IN BRITAIN) FOR INSTRUCTION ON THE ISOLATION OF ELECTRICAL SUPPLY TO THE APPARATUS. FURTHER MORE THERE MUST BE "EFFECTIVE MEASURES TO PREVENT THE RESTORATION OF SUPPLY TO THE APPARATUS WHILE THE RISK OF EXPOSING UNPROTECTED LIVE CONDUCTORS TO AN EXPLOSIVE ATMOSPHERE CONTINUES":BS5345 PART 1 1989 SECTION 18.

RESTORATION OF SUPPLY FOR ELECTRICAL TESTING: "WHERE, FOR PURPOSES OF ELECTRICAL TESTING, IT IS ESSENTIAL TO RESTORE THE SUPPLY BEFORE THE APPARATUS IS REASSEMBLED, THEN THIS WORK SHOULD BE UNDER A CONTROLLED PROCEDURE AND THE SPECIFIC LOCATION ASSESSED TO ENSURE THAT POTENTIALLY FLAMMABLE GAS OR VAPOUR IS ABSENT":BS5345 PART 1 1989 SECTION 23.

REMOVAL OF JUNCTION BOX COVER: DO NOT OPEN THE APPARATUS COVER WHILE THE APPARATUS IS ENERGIZED. WAIT 10 MINUTES AFTER DEENERGIZING BEFORE OPENING THE APPARATUS.

(3) WIRING OF THE APPARATUS: EACH APPARATUS MUST BE WIRED AS DETAILED IN THE APPLICABLE INSTRUCTION BULLETIN (USER MANUAL).

(4) INSTRUCTION BULLETINS (USER MANUAL): THE APPLICABLE INSTRUCTION BULLETIN IS: IB-106-300NFX: USED WITH IFT3000 ELECTRONICS.
THIS INSTRUCTION BULLETIN CONTAINS ESSENTIAL INFORMATION & MUST BE USED WHEN WORKING ON THE APPARATUS.

(5) CABLE GLANDS: HAWKE CABLE GLAND, TYPE ICG653 (BASEEFA CERTIFICATE: BAS No. EX 85B1258U) OR AN EQUIVALENT MUST BE USED. THIS GLAND IS A BARRIER (STOPPER) GLAND. A FEATURE OF THIS GLAND IS THAT A COMPOUND FILLED PACKING MATERIAL (PUTTY), FORMS A BARRIER BETWEEN THE INDIVIDUAL INSULATED CONDUCTORS OF THE CABLE. THIS BARRIER ACTS TO PREVENT ENTRY INTO THE CABLE OF THE PRODUCTS OF AN EXPLOSION WITHIN THE ENCLOSURE. THIS GLAND IS CERTIFIED Exd IIC.

DRFTM	J. Valley	17/5/95
CHKD	Ron O'Connor / J. Valley	17/5/95
ENGR	Ronan O'Connor	18/5/95
APPR		

ROSEMOUNT Measurement Control Analytical

TITLE SAFETY DATA SHEET FOR CENELEC APPROVED IFT3000

SIZE

DWG NO 1M03296

SCALE

SHEET 1 OF 2

34990001

DEO 05867 13/12/93	1
DEO 05932 7-4-94	2
DEO 06435 17-5-95	3

THIS DRAWING AFFECTS CENELEC CERTIFICATION.
NO REVISION ALLOWED WITHOUT CHECKING AND
APPROVAL BY THE PRODUCT ENGINEER.

DRFTM J. Whitely 12/5/
CHKD Tom O'Connor J. Whitely 1/95
ENGR Kevin Olsen 18/5/95
APPR

ROSEMOUNT Measurement Control Analytical

TITLE SAFETY DATA SHEET FOR CENELEC APPROVED IFT3000

SIZE
DWG NO 1M03296
SCALE
SHEET 2

(6) EXISTING WESTINGHOUSE/ROSEMOUNT SUPPLIED CABLE:
ON EARLIER INSTALLATIONS WESTINGHOUSE/ROSEMOUNT SUPPLIED A CABLE BETWEEN THE DIGITAL ELECTRONICS AND PROBE (MODEL 218).
THE GLANDS ON THIS CABLE - ALTHOUGH HAWKE GLANDS CERTIFIED Exd IIC WERE NOT OF THE HAWKE BARRIER (STOPPER) GLAND, TYPE ICG653 VARIETY. THESE GLANDS MUST NOT BE USED. ROSEMOUNT CAN SUPPLY A BARRIER GLAND KIT TO REPLACE SUCH GLANDS. THE KIT (PART No. 1U03066G07), COMPRISES OF TWO BARRIER GLANDS COMPLETE WITH PUTTY, CRIMPS AND AN INSTRUCTION SHEET. PLEASE NOTE THAT YOU SHOULD USE ONLY PUTTY WHICH IS PLASTIC & CAPABLE OF BEING MIXED. YOU SHOULD NOT USE CRYSTALISED OR HARD PUTTY.

(7) CABLE ANCHORAGE:
THIS APPARATUS DOES NOT INCLUDE ANY SPECIFIC MEANS FOR CABLE ANCHORAGE. THE CABLE GLANDS CHOSEN FOR THE MAINS, PROBE, AND SIGNAL CABLES MUST BE OF A TYPE WHICH SUPPLY CABLE ANCHORAGE. THE BARRIER (STOPPER) GLAND SUPPLIED BY ROSEMOUNT AS PART OF THE PROBE CABLE ASSEMBLY, WILL GIVE SUCH CABLE ANCHORAGE.

(8) UNUSED CABLE ENTRY PORTS: ALL CABLE ENTRY PORTS WHICH ARE UNUSED ARE TO BE CLOSED OFF WITH THREADED PLUGS CERTIFIED Exd IIC. THERE SHOULD BE A MINIMUM OF 5 THREADS ENGAGED AND THE THREADS SEALED WITH THREADLOCK (LOCKTITE 271 OR EQUIVALENT).

(9) NAMEPLATE (LABEL): ENSURE THAT NAMEPLATE IS AT ALL TIMES VISIBLE. AT INSTALLATION, ALLOWANCE MUST BE MADE FOR THIS.

(10) EARTHING OF THE APPARATUS: THE APPARATUS HAS BEEN FITTED WITH BOTH EXTERNAL AND INTERNAL EARTHING POINTS. ADEQUATE EARTH CONNECTIONS SHOULD BE MADE TO BOTH THESE POINTS.

(11) SHEET METALWORK PANELS:
THIS APPARATUS CONTAINS A NUMBER OF SHEET METALWORK PANELS FOR MOUNTING THE PRINTER CIRCUIT BOARDS. BECAUSE THESE PANELS ARE IN CLOSE PROXIMITY TO THE WALLS OF THE FLAMEPROOF ENCLOSURE, IT WAS NECESSARY TO PERFORATE THEM WITH HOLES AND SLOTS. THESE HOLES AND SLOTS PREVENT PRESSURE PILING BETWEEN THE PANELS AND THE WALLS & LID OF THE ENCLOSURE. DO NOT DO ANYTHING WHICH MIGHT OBSCURE THESE SLOTS & HOLES.

(12) LIFTING AND CARRYING:
THE IFT3000 IS A HEAVY PIECE OF APPARATUS. LIFTING AND CARRYING PROCEDURES SHOULD TAKE ACCOUNT OF THIS WEIGHT.

(13) CONNECTION TO HART OPTION:
HART IS A COMMUNICATIONS PROTOCOL WHICH ALLOWS REMOTE COMMUNICATION WITH THE IFT3000 VIA THE 4-20mA OUTPUT. BECAUSE, ON THE IFT3000, THE HART OPTION IS NOT PROTECTED BY ENERGY LIMITING BARRIERS, IT MUST NOT BE INTERFACED FROM WITHIN THE HAZARDOUS AREA. THE 4-20mA CABLES SHOULD BE ROUTED OUTSIDE THE HAZARDOUS AREA, AND THE CONNECTION MADE OUT THERE. NOTE THIS IS THE CASE EVEN WHEN USING THE INTRINSICALLY SAFE VERSION OF THE THE HANDHELD COMMUNICATOR. THE LIMITATION (ie, NO ENERGY LIMITING BARRIER) LIES IN THE IFT3000 NOT IN THE HANDHELD UNIT.

34990002

DEO 05554	17-2-93	1
DEO 05856	13-12-93	2
DEO 05933	7-4-94	3

THIS DRAWING AFFECTS CENELEC CERTIFICATION.
NO REVISION ALLOWED WITHOUT CHECKING AND
APPROVAL BY THE PRODUCT ENGINEER.

INTRODUCTION: THIS SAFETY DATA SHEET APPLIES TO BOTH, HEATER POWER SUPPLY 3000 (HPS3000), TYPE No. 1U05667 AND TO DIGITAL ELECTRONICS, TYPE No. 1U03083.
THESE APPARATUS ARE CERTIFIED EExd IIC T6.

ISSeP CERTIFICATE No. 92C.103.1037, AND INIEX CERTIFICATE No. 87.103.578.
THESE APPARATUS HAVE BEEN DESIGNED AND MANUFACTURED TO OPERATE SAFELY IN CERTAIN TYPES OF POTENTIALLY EXPLOSIVE ATMOSPHERES. IT IS ESSENTIAL THAT THE EQUIPMENT IS NOT TAMPERED WITH OR DAMAGED IN ANY WAY WHICH MIGHT LEAD TO A REDUCTION IN IT'S ABILITY TO OPERATE SAFELY IN SUCH POTENTIALLY EXPLOSIVE ATMOSPHERES. FOR YOUR OWN SAFETY AND THE SAFETY OF OTHERS PLEASE BRING ANY DAMAGE TO THE ATTENTION OF THE RESPONSIBLE AUTHORITY.

THESE APPARATUS HAVE BEEN DESIGNED AND MANUFACTURED IN ACCORDANCE WITH EUROPEAN STANDARDS EN50014 & EN50018. INSTALLATION MAINTENANCE AND REPAIR MUST BE IN ACCORDANCE WITH THE OFFICIAL "CODES OF PRACTICE ON THE INSTALLATION AND MAINTENANCE OF ELECTRICAL APPARATUS IN POTENTIALLY EXPLOSIVE ATMOSPHERES" FOR THE COUNTRY OF INSTALLATION (EXAMPLE: BS5345 IN GREAT BRITAIN). ONLY APPROPRIATELY TRAINED PERSONNEL ARE AUTHORIZED TO PERFORM ANY WORK ON THIS EQUIPMENT. SUCH PERSONNEL IN ADDITION TO OPERATING TO THE ABOVE MENTIONED SAFETY STANDARDS, SHOULD TAKE NOTE OF THE FOLLOWING SAFETY ISSUES.

(1) FLAMEPROOF APPARATUS OR NON FLAMEPROOF APPARATUS:

THE ROSEMOUNT ENCODE SHEETS (PRODUCT ORDERING MATRIX) ALLOWS A CUSTOMER TO ORDER EITHER THE HAZARDOUS AREA (FLAMEPROOF) VERSION OF THE APPARATUS OR THE NON HAZARDOUS AREA VERSION. THE HAZARDOUS AREA VERSION HAS THE SYMBOL "EExd" ON THE APPARATUS NAMEPLATE. THE NON HAZARDOUS AREA VERSION DOES NOT. ENSURE THAT IF YOU HAVE RECEIVED THE NON HAZARDOUS AREA VERSION THAT YOU DO NOT INSTALL IT IN A POTENTIALLY EXPLOSIVE ENVIRONMENT.

(2) POWER DOWN PROCEDURE:

ISOLATION OF ELECTRICAL SUPPLY: THIS PIECE OF APPARATUS IS NOT ITSELF FITTED WITH A MEANS OF ELECTRICAL ISOLATION. CONSULT YOUR LOCAL CODES OF PRACTICE ON THE INSTALLATION AND MAINTENANCE OF ELECTRICAL APPARATUS IN POTENTIALLY EXPLOSIVE ATMOSPHERES (BS5345 IN BRITAIN) FOR INSTRUCTION ON THE ISOLATION OF ELECTRICAL SUPPLY TO THE APPARATUS. FURTHER MORE THERE MUST BE "EFFECTIVE MEASURES TO PREVENT THE RESTORATION OF SUPPLY TO THE APPARATUS WHILE THE RISK OF EXPOSING UNPROTECTED LIVE CONDUCTORS TO AN EXPLOSIVE ATMOSPHERE CONTINUES":BS5345 PART 1 1989 SECTION 18.

RESTORATION OF SUPPLY FOR ELECTRICAL TESTING: "WHERE, FOR PURPOSES OF ELECTRICAL TESTING, IT IS ESSENTIAL TO RESTORE THE SUPPLY BEFORE THE APPARATUS IS REASSEMBLED, THEN THIS WORK SHOULD BE UNDER A CONTROLLED PROCEDURE AND THE SPECIFIC LOCATION ASSESSED TO ENSURE THAT POTENTIALLY FLAMMABLE GAS OR VAPOUR IS ABSENT":BS5345 PART 1 1989 SECTION 23.

REMOVAL OF JUNCTION BOX COVER: DO NOT REMOVE THE JUNCTION BOX COVER WHILE THE APPARATUS IS ENERGIZED. WAIT 10 MINUTES AFTER DEENERGIZING BEFORE OPENING THE APPARATUS.

(3) WIRING OF THF APPARATUS: EACH APPARATUS MUST BE WIRED AS DETAILED IN THE APPLICABLE INSTRUCTION BULLETIN (USER MANUAL).

(4) INSTRUCTION BULLETINS (USER MANUAL): THE APPLICABLE INSTRUCTION BULLETINS ARE:
IB-106-300NEX:"EXCHANGE PROBE" CONFIGURATION & "FULLY CENELEC" CONFIGURATION.
IB-106-300NFX: USED WITH IFT3000 ELECTRONICS.
IB-106-300NCX: USED WITH CRE3000 ELECTRONICS.
THESE INSTRUCTION BULLETINS CONTAIN ESSENTIAL INFORMATION & MUST BE USED WHEN WORKING ON THE APPARATUS.

(5) CABLE GLANDS: HAWKE CABLE GLAND, TYPE ICG653 (BASEEFA CERTIFICATE: BAS No. EX 85B1258U) OR AN EQUIVALENT MUST BE USED. THIS GLAND IS A BARRIER (STOPPER) GLAND. A FEATURE OF THIS GLAND IS THAT A COMPOUND FILLED PACKING MATERIAL (PUTTY), FORMS A BARRIER BETWEEN THE INDIVIDUAL INSULATED CONDUCTORS OF THE CABLE. THIS BARRIER ACTS TO PREVENT ENTRY INTO THE CABLE OF THE PRODUCTS OF AN EXPLOSION WITHIN THE ENCLOSURE. THIS GLAND IS CERTIFIED EExd IIC.

DRFTM	J Vallely	7/4/94
CHKD	Eoin O'Connor	7/4/94
ENGR	Eoin O'Connor	7/4/94
APPR		

ROSEMOUNT Measurement Control Analytical

TITLE SAFETY DATA SHEET FOR CENELEC APPROVED HPS3000 & CENELEC APPROVED DIG. ELECTRONICS

SIZE | DWG NO 1M03243

SCALE | SHEET 1 OF 2

34990003

DEO 05554 17-2-93	1
DEO 05856 13-12-93	2
DEO 05933 7-4-94	3

THIS DRAWING AFFECTS CENELEC CERTIFICATION.
NO REVISION ALLOWED WITHOUT CHECKING AND
APPROVAL BY THE PRODUCT ENGINEER.

(6) EXISTING WESTINGHOUSE/ROSEMOUNT SUPPLIED CABLE:
ON EARLIER INSTALLATIONS WESTINGHOUSE/ROSEMOUNT SUPPLIED A CABLE BETWEEN THE DIGITAL ELECTRONICS AND PROBE (MODEL 218).
THE GLANDS ON THIS CABLE - ALTHOUGH HAWKE GLANDS CERTIFIED Exd IIC WERE NOT OF THE HAWKE BARRIER (STOPPER) GLAND, TYPE ICG653 VARIETY. THESE GLANDS MUST NOT BE USED. ROSEMOUNT CAN SUPPLY A BARRIER GLAND KIT TO REPLACE SUCH GLANDS. THE KIT (PART No. 1U03066G07), COMPRISES OF TWO BARRIER GLANDS COMPLETE WITH PUTTY, CRIMPS AND AN INSTRUCTION SHEET. PLEASE NOTE THAT YOU SHOULD USE ONLY PUTTY WHICH IS PLASTIC & CAPABLE OF BEING MIXED. YOU SHOULD NOT USE CRYSTALIZED OR HARD PUTTY.

(7) CABLE ANCHORAGE:
NEITHER THE HPS3000 NOR THE DIGITAL ELECTRONICS INCLUDE ANY SPECIFIC MEANS FOR CABLE ANCHORAGE. THE CABLE GLANDS CHOSEN FOR THE MAINS, PROBE, AND SIGNAL CABLES MUST BE OF A TYPE WHICH SUPPLY CABLE ANCHORAGE. THE BARRIER (STOPPER) GLAND SUPPLIED BY ROSEMOUNT AS PART OF THE PROBE CABLE ASSEMBLY, WILL GIVE SUCH CABLE ANCHORAGE.

(8) UNUSED CABLE ENTRY PORTS: ALL CABLE ENTRY PORTS WHICH ARE UNUSED ARE TO BE CLOSED OFF WITH THREADED PLUGS CERTIFIED Exd IIC. THERE SHOULD BE A MINIMUM OF 5 THREADS ENGAGED AND THE THREADS SEALED WITH THREADLOCK (LOCKTITE 271 OR EQUIVALENT).

(9) NAMEPLATE (LABEL): ENSURE THAT NAMEPLATE IS AT ALL TIMES VISIBLE. AT INSTALLATION, ALLOWANCE MUST BE MADE FOR THIS.

(10) EARTHING OF THE APPARATUS: THE APPARATUS HAS BEEN FITTED WITH BOTH EXTERNAL AND INTERNAL EARTHING POINTS. ADEQUATE EARTH CONNECTIONS SHOULD BE MADE TO BOTH THESE POINTS.

DRFTM J Vallely 7/4/94	ROSEMOUNT Measurement Control Analytical	
CHKD Eamon O'Connor 7/4/94	TITLE SAFETY DATA SHEET FOR CENELEC APPROVED HPS3000 & CENELEC APPROVED DIG. ELECTRONICS	
ENGR Eamon O'Connor 7/4/94	SIZE	DWG NO 1M03243
APPR	SCALE	SHEET 2

34990004

DEO 05553 16-2-93	1
DEO 05934 4-2-94	2

THIS DRAWING AFFECTS CENELEC CERTIFICATION. NO REVISION ALLOWED WITHOUT CHECKING AND APPROVAL BY THE PRODUCT ENGINEER.

INTRODUCTION: THIS SAFETY DATA SHEET APPLIES TO WC3000 INSITU OXYGEN ANALYZER (PROBE),TYPE No. 1U05680. THIS OXYGEN ANALYZER IS CERTIFIED EExd IIB 370 (T1): ISSeP CERTIFICATE No. 93C.103.1067.
THIS PIECE OF EQUIPMENT HAS BEEN DESIGNED AND MANUFACTURED TO OPERATE SAFELY IN CERTAIN TYPES OF POTENTIALLY EXPLOSIVE ATMOSPHERES. IT IS ESSENTIAL THAT THE EQUIPMENT IS NOT TAMPERED WITH OR DAMAGED IN ANY WAY WHICH MIGHT LEAD TO A REDUCTION IN IT'S ABILITY TO OPERATE SAFELY IN SUCH POTENTIALLY EXPLOSIVE ATMOSPHERES. FOR YOUR OWN SAFETY AND THE SAFETY OF OTHERS PLEASE BRING ANY DAMAGE TO THE ATTENTION OF THE RESPONSIBLE AUTHORITY.

THIS PIECE OF EQUIPMENT HAS BEEN DESIGNED AND MANUFACTURED IN ACCORDANCE WITH EUROPEAN STANDARDS EN50014 & EN50018. INSTALLATION MAINTENANCE AND REPAIR MUST BE IN ACCORDANCE WITH THE OFFICIAL "CODES OF PRACTICE ON THE INSTALLATION AND MAINTENANCE OF ELECTRICAL APPARATUS IN POTENTIALLY EXPLOSIVE ATMOSPHERES'' FOR THE COUNTRY OF INSTALLATION (EXAMPLE: BS5345 IN GREAT BRITAIN). ONLY APPROPRIATELY TRAINED PERSONNEL ARE AUTHORIZED TO PERFORM ANY WORK ON THIS EQUIPMENT. SUCH PERSONNEL IN ADDITION TO OPERATING TO THE ABOVE MENTIONED SAFETY STANDARDS, SHOULD TAKE NOTE OF THE FOLLOWING SAFETY ISSUES.

NOTE: THROUGHOUT THIS DATA SHEET, CONTINUOUS REFERENCE WILL BE MADE TO FIGURE 1.

(1) POWER DOWN PROCEDURE:

ISOLATION OF ELECTRICAL SUPPLY: THIS PIECE OF APPARATUS IS NOT ITSELF FITTED WITH A MEANS OF ELECTRICAL ISOLATION. CONSULT YOUR LOCAL CODES OF PRACTICE ON THE INSTALLATION AND MAINTENANCE OF ELECTRICAL APPARATUS IN POTENTIALLY EXPLOSIVE ATMOSPHERES (BS5345 IN BRITAIN) FOR INSTRUCTION ON THE ISOLATION OF ELECTRICAL SUPPLY TO THE APPARATUS. FURTHER MORE THERE MUST BE "EFFECTIVE MEASURES TO PREVENT THE RESTORATION OF SUPPLY TO THE APPARATUS WHILE THE RISK OF EXPOSING UNPROTECTED LIVE CONDUCTORS TO AN EXPLOSIVE ATMOSPHERE CONTINUES":BS5345 PART 1 1989 SECTION 18.

RESTORATION OF SUPPLY FOR ELECTRICAL TESTING: "WHERE, FOR PURPOSES OF ELECTRICAL TESTING, IT IS ESSENTIAL TO RESTORE THE SUPPLY BEFORE THE APPARATUS IS REASSEMBLED, THEN THIS WORK SHOULD BE UNDER A CONTROLLED PROCEDURE AND THE SPECIFIC LOCATION ASSESSED TO ENSURE THAT POTENTIALLY FLAMMABLE GAS OR VAPOUR IS ABSENT":BS5345 PART 1 1989 SECTION 23.

REMOVAL OF JUNCTION BOX COVER: DO NOT REMOVE THE JUNCTION BOX COVER (ITEM 2) WHILE THE APPARATUS IS ENERGIZED. DO NOT REMOVE THE JUNCTION BOX COVER WHEN A POTENTIALLY EXPLOSIVE ATMOSPHERE IS PRESENT. REMEMBER (ALTHOUGH THE UNIT HAS BEEN POWERED DOWN AND THE PROBE HEATER HAS BEEN ALLOWED TO COOL DOWN), THE TEMPERATURE ON THE INTERIOR OF THE PROBE TUBE (ITEM 1) WILL BE SIMILAR TO THE TEMPERATURE OF THE EXHAUST GAS. IF THERE IS A POTENTIALLY EXPLOSIVE ATMOSPHERE IN THE REGION OF THE JUNCTION BOX (ITEM 3), THIS GAS WILL, ON THE REMOVAL OF THE JUNCTION BOX COVER BE EXPOSED TO THE HOT SURFACE OF THE TUBE INTERIOR (ITEM 1).

(2) THREADED JOINTS: THE JOINT BETWEEN THE JUNCTION BOX (ITEM 3) AND THE JUNCTION BOX LID (ITEM 2) IS A THREADED JOINT. SO ALSO IS THE JOINT BETWEEN THE PROBE END FLANGE (ITEM 4) AND THE FLAME ARRESTOR HUB (ITEM 5). BOTH THESE JOINTS ARE SECURED BY SET SCREWS (ITEMS 6 & 7). BEFORE REMOVING THE JUNCTION BOX COVER (ITEM 2) OR THE FLAME ARRESTOR HUB (ITEM 5), FULLY REMOVE THE SET-SCREWS (ITEMS 6 & 7) FROM THEIR TAPPED HOLES. FAILURE TO DO THIS COULD RESULT IN DAMAGE TO THE THREADS OF THE JUNCTION BOX (ITEM 3) AND THE PROBE END FLANGE (ITEM 4) BY THE SETSCREWS BEING DRAWN OVER THE THREADS. REMEMBER WHEN REFITTING THE JUNCTION BOX LID AND THE FLAME ARRESTOR HUB TO LOCK IN PLACE WITH THE SETSCREWS.
THE MATERIAL OF THE JUNCTION BOX AND THE JUNCTION BOX LID IS ALUMINUM ALLOY. SPECIAL CARE SHOULD BE TAKEN TO AVOID DAMAGE TO THE THREADS.
NOTE THAT ROSEMOUNT SUPPLIES ALLEN KEYS FOR REMOVAL & REPLACEMENT OF THE SETSCREWS.

DRFTN	ROSEMOUNT Measurement Control Analytical		
CHKD	TITLE SAFETY DATA SHEET FOR CENELEC APPROVED WC3000 PROBE		
ENGR			
APPR	SIZE	DWG NO 1M03226	
	SCALE	SHEET 1 OF 6	

34990005

DEO 05553 16-2-93	1
DEO 05934 4-2-94	2

THIS DRAWING AFFECTS CENELEC CERTIFICATION.
NO REVISION ALLOWED WITHOUT CHECKING AND
APPROVAL BY THE PRODUCT ENGINEER.

(3) CORROSION AND ABRASION:

● PROBE TUBE (ITEM 1): TO PROVIDE RESISTANCE AGAINST THE EFFECTS OF CORROSION AND ABRASION, THE PROBE TUBE HAS BEEN MANUFACTURED FROM 4.75mm WALL, 316 SERIES STAINLESS STEEL FOR THE MAJORITY OF APPLICATIONS THE RESISTANCE AFFORDED BY THIS PROBE TUBE AGAINST CORROSION AND ABRASION IS MORE THAN ADEQUATE. FOR APPLICATIONS IN WHICH THE EFFECTS OF CORROSION OR ABRASION ARE SIGNIFICANT, ROSEMOUNT CAN SUPPLY AN ABRASIVE SHIELD.

● FLAME ARRESTOR HUB (ITEM 5): THE FLAME ARRESTOR HUB HAS BEEN MANUFACTURED FROM 316 SERIES STAINLESS STEEL AT ITS THINNEST SECTION (BETWEEN THE O/D OF THE HUB AND THE MAXIMUM MAJOR DIAMETER OF THE M70 X 2 X 6H THREAD: SEE FIGURE 2). THE MINIMUM MATERIAL THICKNESS IS 2.75mm. FOR THE MAJORITY OF APPLICATIONS THE PROTECTION AFFORDED BY THIS ARRANGEMENT AGAINST THE EFFECTS OF CORROSION AND ABRASION IS MORE THAN ADEQUATE. FOR APPLICATIONS IN WHICH THE EFFECTS OF CORROSION OR ABRASION ARE SIGNIFICANT, ROSEMOUNT CAN SUPPLY AN ABRASIVE SHIELD.

DRFTN	J.J. 2/5/94	ROSEMOUNT Measurement Control Analytical	
CHKD	7-6-94	TITLE SAFETY DATA SHEET FOR CENELEC APPROVED WC3000 PROBE	
ENGR	7/14/94		
APPR		SIZE	DWG NO 1M03226
		SCALE	SHEET 2

3490006

DEO	05553	1
	16-2-93	
DEO	05934	2
	4-2-94	

THIS DRAWING AFFECTS CENELEC CERTIFICATION.
NO REVISION ALLOWED WITHOUT CHECKING AND
APPROVAL BY THE PRODUCT ENGINEER.

(4) BREATHING DEVICES: EACH OF THE THREE BULKHEAD UNION FITTINGS (ITEM 8) HAS BEEN FITTED WITH A CAPILLARY ARRAY, (BREATHING DEVICE): SEE FIGURE 3. WHEN FITTING TUBING, (0.25 INCH O/D), TO THE REFERENCE AIR AND CALIBRATION GAS PORTS, TAKE CARE NOT TO DAMAGE THE BREATHING DEVICES. THE VENT PORT SHOULD BE LEFT CLEAR OF OBSTRUCTIONS.

(5) WIRING DIAGRAM: THE PROBE SHOULD BE WIRED AS SHOWN IN FIGURE 4.

(6) CUSTOMER REPAIRS: THE FOLLOWING REPAIRS ARE THE ONLY REPAIRS WHICH THE CUSTOMER IS ALLOWED TO MAKE:

- REPLACEMENT OF ZIRCONIUM CELL (ITEM 9) - CELL REPLACEMENT KIT -.
- REPLACEMENT OF STRUT ASSEMBLY (ITEM 10). THE RESISTANCE OF THE REPLACEMENT HEATER MUST BE 11 OHMS OR GREATER
- REPLACEMENT OF CONTACT AND THERMOCOUPLE ASSEMBLY (ITEM 11).
- REPLACEMENT OF FLAME ARRESTOR HUB ASSEMBLY (ITEM 5).
- REPLACEMENT OF VEE DEFLECTOR ASSEMBLY (ITEM 12).
- REPLACEMENT OF CERAMIC DIFFUSION ELEMENT (ITEM 13) - DIFFUSION ELEMENT REPLACEMENT KIT - . TAKE CARE NOT TO DAMAGE THE FLAME ARRESTOR (ITEM 18) ITSELF OR THE FLAME ARRESTOR HUB.

WIRING DIAGRAM

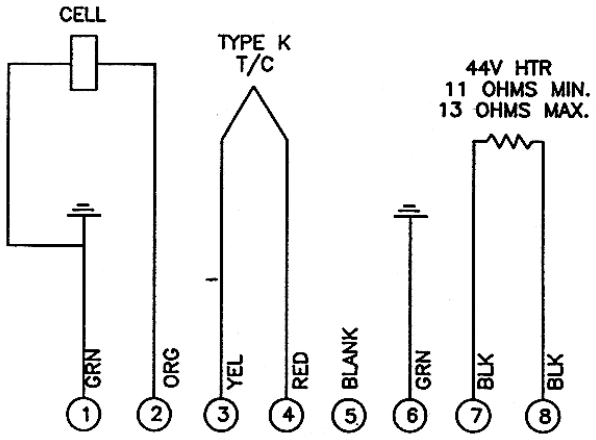

FIGURE 4

DRFTM		
CHKD		
ENGR		
APPR		

ROSEMOUNT Measurement Control Analytical

TITLE SAFETY DATA SHEET FOR CENELEC APPROVED WC3000 PROBE

SIZE | DWG NO 1M03226

SCALE | SHEET 3

3490007

DEO 05553 16-2-93	1
DEO 05934 4-2-94	2

THIS DRAWING AFFECTS CENELEC CERTIFICATION. NO REVISION ALLOWED WITHOUT CHECKING AND APPROVAL BY THE PRODUCT ENGINEER.

(7) CABLE ENTRY: CABLE ENTRY TO THIS APPARATUS IS VIA THE 1/2" NPT CABLE ENTRY PORT PROVIDED. THE CABLE ENTRY MUST MAINTAIN THE FLAMEPROOF PROPERTIES OF THE ENCLOSURE. ROSEMOUNT CAN SUPPLY A CABLE WHICH IS TERMINATED WITH A BARRIER (STOPPER) GLAND. A FEATURE OF THIS GLAND IS THAT A COMPOUND FILLED PACKING MATERIAL (PUTTY), FORMS A BARRIER BETWEEN THE INDIVIDUAL INSULATED CONDUCTORS OF THE CABLE. THIS BARRIER ACTS TO PREVENT ENTRY INTO THE CABLE OF THE PRODUCTS OF AN EXPLOSION WITHIN THE ENCLOSURE. THE GLAND IS CERTIFIED Exd IIC.

WARNING: ON EARLIER VERSIONS OF THE ABOVE CABLE SUPPLIED BY WESTINGHOUSE/ROSEMOUNT, THE GLANDS, ALTHOUGH CERTIFIED Exd IIC, WERE NOT OF THE BARRIER GLAND TYPE. THIS GLAND SHOULD NOT BE USED WITH THE WC3000 INSITU OXYGEN ANALYZER. ROSEMOUNT CAN SUPPLY A BARRIER GLAND KIT TO REPLACE SUCH GLANDS. THE KIT (P/N 1U03066G07), COMPRISES OF TWO BARRIER GLANDS COMPLETE WITH PUTTY, CRIMPS AND AN INSTRUCTION SHEET. PLEASE NOTE THAT YOU SHOULD USE ONLY PUTTY WHICH IS PLASTIC AND CAPABLE OF BEING MIXED. YOU SHOULD NOT USE CRYSTALIZED OR HARD PUTTY.

(8) CABLE ANCHORAGE: THE PROBE JUNCTION BOX DOES NOT INCLUDE ANY SPECIFIC MEANS FOR CABLE ANCHORAGE. THE CABLE GLAND CHOSEN MUST BE ONE WHICH PROVIDES CABLE ANCHORAGE. THE BARRIER (STOPPER) GLAND SUPPLIED BY ROSEMOUNT AS PART OF THE PROBE CABLE ASSEMBLY, WILL PROVIDE CABLE ANCHORAGE.

(9) INSTRUCTION BULLETINS (USER MANUALS): DEPENDING ON THE ELECTRONICS CONTROL UNIT USED, THE APPLICABLE INSTRUCTION BULLETINS ARE AS FOLLOWS:

IB-106-300NEX: USED IN THE “EXCHANGE PROBE” CONFIGURATION AND IN THE “FULLY CENELEC CERTIFIED” CONFIGURATION

IB-106-300NFX: USED WITH IFT3000 ELECTRONICS.

IB-106-300NCX: USED WITH CRE3000 ELECTRONICS.

THESE INSTRUCTION BULLETINS CONTAIN ESSENTIAL INFORMATION AND MUST BE USED WHEN WORKING ON THE APPARATUS.

(10) NAMEPLATE (LABEL): ENSURE THAT NAMEPLATE (ITEM 15) IS AT ALL TIMES VISIBLE. AT INSTALLATION, ALLOWANCE MUST BE MADE FOR THIS.

(11) EARTHING OF THE APPARATUS: THE APPARATUS HAS BEEN FITTED WITH BOTH EXTERNAL (ITEM 16) AND INTERNAL (ITEM 17) EARTHING POINTS. ADEQUATE EARTH CONNECTIONS SHOULD BE MADE TO BOTH THESE POINTS.

(12) MATCHING OF JUNCTION BOX LID WITH JUNCTION BOX: THE JUNCTION LID AND THE JUNCTION BOX ARE A MATCHED PAIR. WHEN FULLY SCREWED ON, THE SETSCREW THREADED HOLE ON THE LID LINES UP WITH AN UNDERCUT AT THE BOTTOM OF THE JUNCTION BOX. THE SETSCREW ENGAGES INTO THIS UNDERCUT. IF YOU HAVE A NUMBER OF PROBES, THEN TAKE CARE TO KEEP THE LID AND PROBE MATCHED.

(13) LIFTING & CARRYING: BOTH THE PROBE AND ABRASIVE SHIELD ARE HEAVY PIECES OF EQUIPMENT LIFTING AND CARRYING PROCEDURES SHOULD TAKE ACCOUNT OF THIS WEIGHT.

DRFTR J. Valley 7/4/94
CHKD 7/4/94
BNCR 7/4/94
APPR

ROSEMOUNT Measurement Control Analytical

TITLE SAFETY DATA SHEET FOR CENELEC APPROVED WC3000 PROBE

SIZE
DWG NO 1M03226
SCALE
SHEET 4

3490008

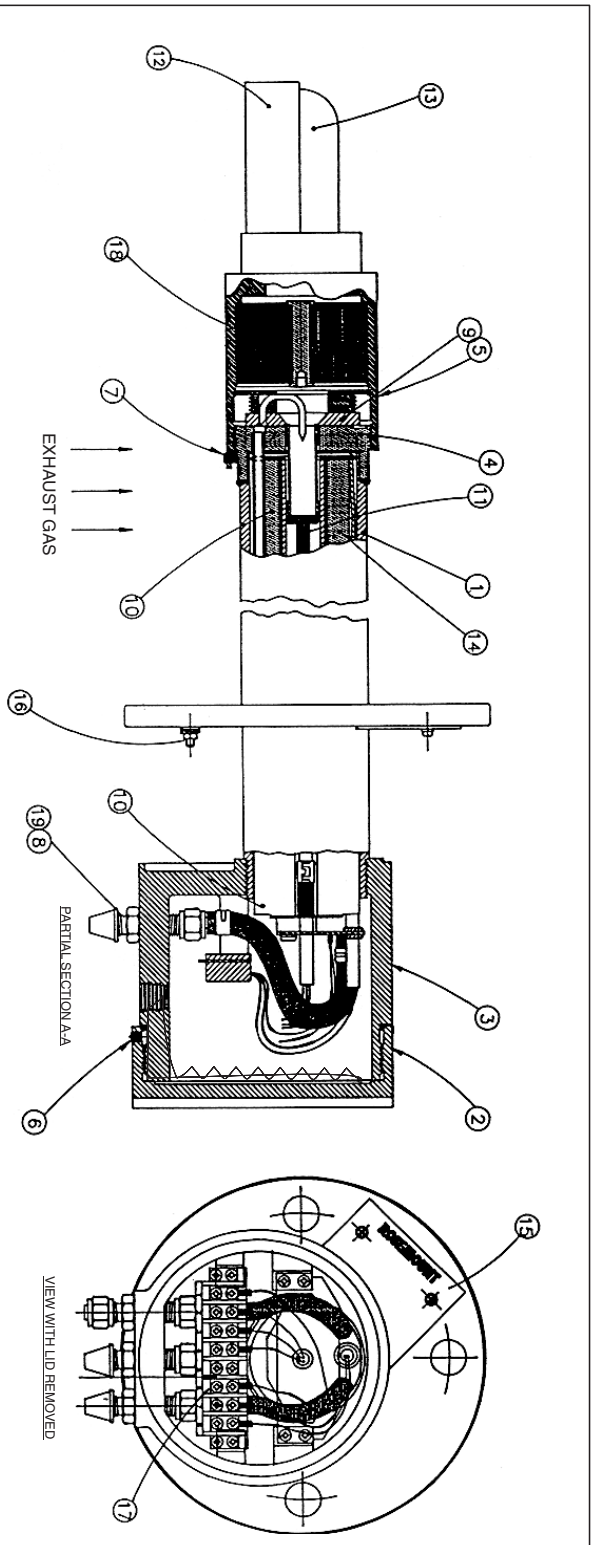

FIGURE 1

ITEM	DESCRIPTION
1	PROBE TUBE
2	JUNCTION BOX COVER
3	JUNCTION BOX
4	PROBE END FLANGE
5	FLAME ARRESTOR HUB ASSEMBLY
6	JUNCTION BOX SET SCREW
7	FLAME ARRESTOR HUB SET SCREW
8	BULKHEAD UNION FITTING
9	ZIRCONIUM CELL
10	STRUT ASSY.
11	CONTACT & THERMOCOUPLE ASSY.
12	VEE DEFLECTOR ASSY.
13	CERAMIC DIFFUSER ELEMENT
14	44 VOLT PROBE HEATER
15	ISSEP NAMEPLATE (LABEL)
16	INTERNAL EARTH (TERMINAL 6)
17	EXTERNAL EARTH
18	FLAME ARRESTOR (BREATHING DEVICE)
19	CAPILLARY ARRAY (BREATHING DEVICE)

1	DEO 05553 16-2-93
2	DEO 05934 4-2-94

THIS DRAWING AFFECTS CENELEC CERTIFICATION.
NO REVISION ALLOWED WITHOUT CHECKING AND
APPROVAL BY THE PRODUCT ENGINEER.

DREW V. Valkich 7/4/94
CHKD Rosemary O'Connor 7/4/94
ENGR Rosemary O'Connor 7/4/94
APPR

ROSEMOUNT Measurement Control Analytical

TITLE SAFETY DATA SHEET FOR CENELEC APPROVED WC3000 PROBE

SIZE | DWG NO 1M03226

SCALE | SHEET 5

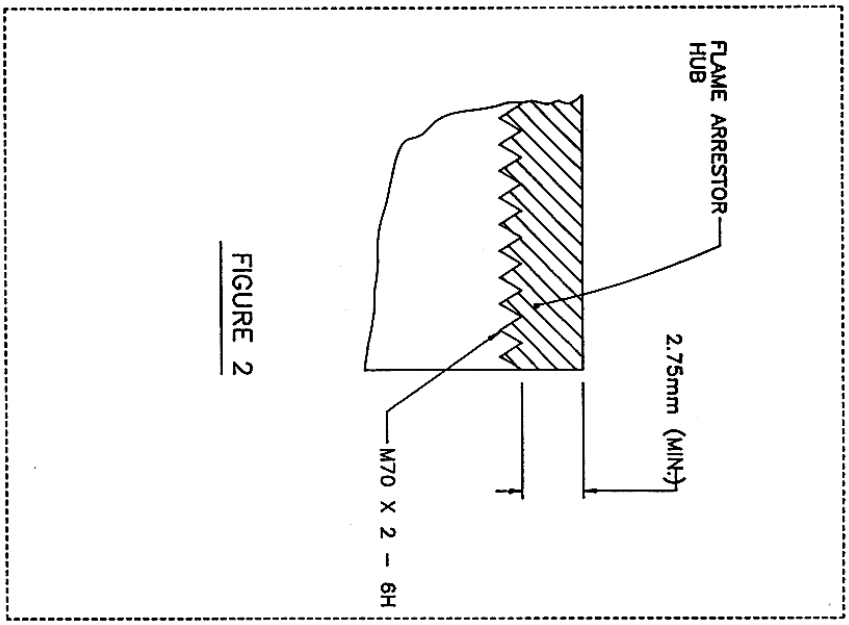

FIGURE 2

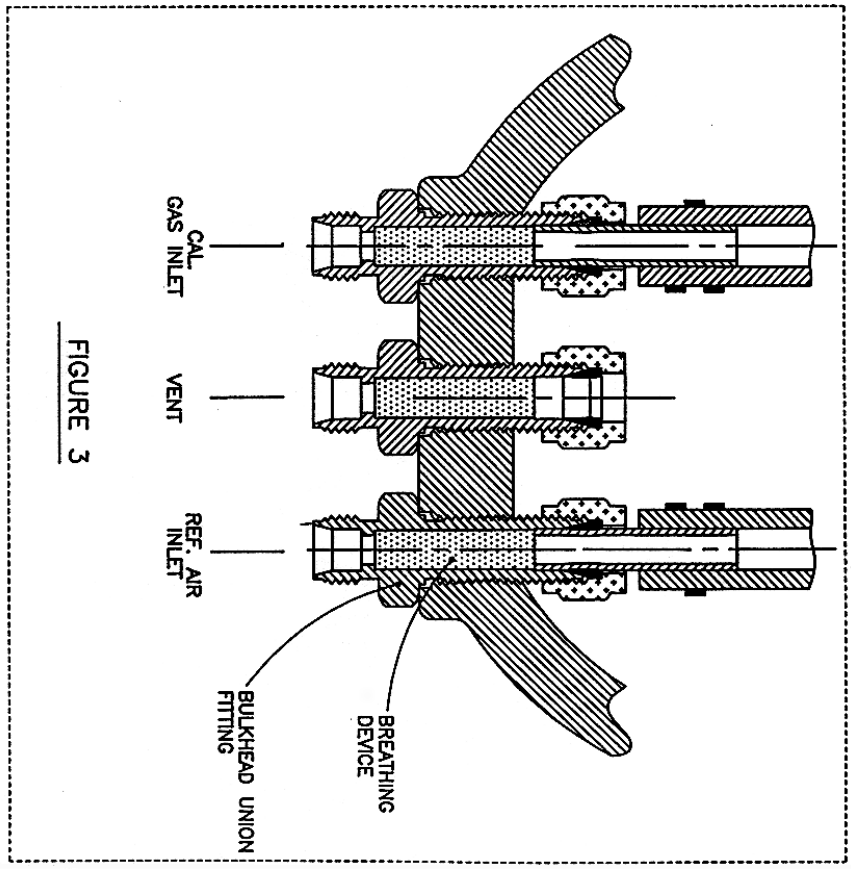

FIGURE 3

DEO 05553 16-2-93	1	
DEO 05934 4-2-94	2	

THIS DRAWING AFFECTS CENELEC CERTIFICATION.
NO REVISION ALLOWED WITHOUT CHECKING AND
APPROVAL BY THE PRODUCT ENGINEER.

DREW J. Valkich 7/4/94
CHKD 7/4/94
ENGR 7/4/94
APPR

ROSEMOUNT Measurement Control Analytical

TITLE SAFETY DATA SHEET FOR CENELEC APPROVED WC3000 PROBE

SIZE
DWG NO 1M03226
SCALE
SHEET 6

34900010

WARRANTY

Goods and part(s) (excluding consumables) manufactured by Seller are warranted to be free from defects in workmanship and material under normal use and service for a period of twelve (12) months from the date of shipment by Seller. Consumables, glass electrodes, membranes, liquid junctions, electrolyte, o-rings, etc., are warranted to be free from defects in workmanship and material under normal use and service for a period of ninety (90) days from date of shipment by Seller. Goods, part(s) and consumables proven by Seller to be defective in workmanship and/or material shall be replaced or repaired, free of charge, F.O.B. Seller's factory provided that the goods, part(s) or consumables are returned to Seller's designated factory, transportation charges prepaid, within the twelve (12) month period of warranty in the case of goods and part(s), and in the case of consumables, within the ninety (90) day period of warranty. This warranty shall be in effect for replacement or repaired goods, part(s) and the remaining portion of the ninety (90) day warranty in the case of consumables. A defect in goods, part(s) and consumables of the commercial unit shall not operate to condemn such commercial unit when such goods, part(s) and consumables are capable of being renewed, repaired or replaced.

The Seller shall not be liable to the Buyer, or to any other person, for the loss or damage directly or indirectly, arising from the use of the equipment or goods, from breach of any warranty, or from any other cause. All other warranties, expressed or implied are hereby excluded.

IN CONSIDERATION OF THE HEREIN STATED PURCHASE PRICE OF THE GOODS, SELLER GRANTS ONLY THE ABOVE STATED EXPRESS WARRANTY. NO OTHER WARRANTIES ARE GRANTED INCLUDING, BUT NOT LIMITED TO, EXPRESS AND IMPLIED WARRANTIES OR MERCHANTABILITY AND FITNESS FOR A PARTICULAR PURPOSE.

Limitations of Remedy. SELLER SHALL NOT BE LIABLE FOR DAMAGES CAUSED BY DELAY IN PERFORMANCE. THE SOLE AND EXCLUSIVE REMEDY FOR BREACH OF WARRANTY SHALL BE LIMITED TO REPAIR OR REPLACEMENT UNDER THE STANDARD WARRANTY CLAUSE. IN NO CASE, REGARDLESS OF THE FORM OF THE CAUSE OF ACTION, SHALL SELLER'S LIABILITY EXCEED THE PRICE TO BUYER OF THE SPECIFIC GOODS MANUFACTURED BY SELLER GIVING RISE TO THE CAUSE OF ACTION. BUYER AGREES THAT IN NO EVENT SHALL SELLER'S LIABILITY EXTEND TO INCLUDE INCIDENTAL OR CONSEQUENTIAL DAMAGES. CONSEQUENTIAL DAMAGES SHALL INCLUDE, BUT ARE NOT LIMITED TO, LOSS OF ANTICIPATED PROFITS, LOSS OF USE, LOSS OF REVENUE, COST OF CAPITAL AND DAMAGE OR LOSS OF OTHER PROPERTY OR EQUIPMENT. IN NO EVENT SHALL SELLER BE OBLIGATED TO INDEMNIFY BUYER IN ANY MANNER NOR SHALL SELLER BE LIABLE FOR PROPERTY DAMAGE AND/OR THIRD PARTY CLAIMS COVERED BY UMBRELLA INSURANCE AND/OR INDEMNITY COVERAGE PROVIDED TO BUYER, ITS ASSIGNS, AND EACH SUCCESSOR INTEREST TO THE GOODS PROVIDED HEREUNDER.

Force Majeure. Seller shall not be liable for failure to perform due to labor strikes or acts beyond Seller's direct control.

Instruction Manual
106-300NFX Rev 4.2
January 2002

World Class 3000

World Class 3000 Probe	HPS 3000
Part No. _____ Serial No. _____ Order No. _____	Part No. _____ Serial No. _____ Order No. _____
IFT 3000	**MPS 3000**
Part No. _____ Serial No. _____ Order No. _____	Part No. _____ Serial No. _____ Order No. _____

Emerson Process Management

Rosemount Analytical Inc.
Process Analytic Division
1201 N. Main St.
Orrville, OH 44667-0901
T (330) 682-9010
F (330) 684-4434
E gas.csc@emersonprocess.com

Fisher-Rosemount GmbH & Co.
Industriestrasse 1
63594 Hasselroth
Germany
T 49-6055-884 0
F 49-6055-884209

ASIA - PACIFIC
Fisher-Rosemount
Singapore Private Ltd.
1 Pandan Crescent
Singapore 128461
Republic of Singapore
T 65-777-8211
F 65-777-0947

EUROPE, MIDDLE EAST, AFRICA
Fisher-Rosemount Ltd.
Heath Place
Bognor Regis
West Sussex PO22 9SH
England
T 44-1243-863121
F 44-1243-845354

LATIN AMERICA
Fisher - Rosemount
Av. das Americas
3333 sala 1004
Rio de Janeiro, RJ
Brazil 22631-003
T 55-21-2431-1882

http://www.processanalytic.com

EMERSON
Process Management