ORIGINALFORMAT A2

ISSUE	MODIF. ORDER NO.	WEEK	ISSUE	MODIF. ORDER NO.	WEEK	ISSUE	MODIF. ORDER NO.	WEEK
1	SME–5112	0535	2	SME–5633	0711			

Product Discontinued

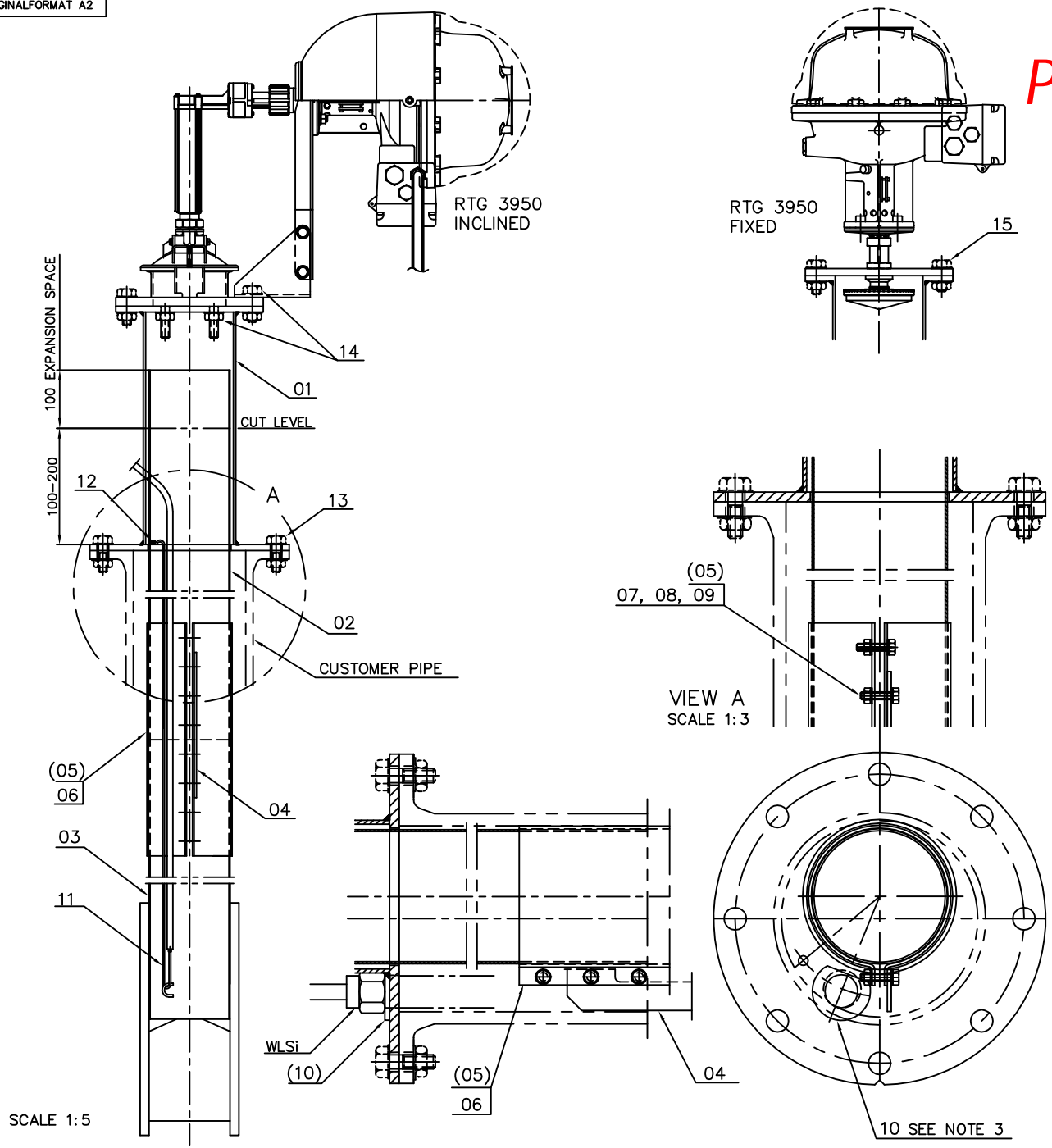

(3) HOLE TO FIT WLSi: USE WASHER 34, POS 10 UNDER MOUNTING NUT

(2) RTG 3950 FIXED VERSION: USE M20 OR 3/4" SIZE SCREW, NUT AND WASHER

(1) RTG 3950 INCLINED VERSION DELIVERY ENCLOSE M20 NUT AND WASHER FOR FLANGE WELDED STUD BARS (4PCS). IN THE REST OF THE BOLT HOLES (4PCS) USE M20 OR 3/4" SIZE BOLT, NUT AND WASHER.

* =TANK HEIGHT DEPENDING VARIABLE

POS	PART DESCRIPTION	SUPPLIER	QTY
15	BOLTING: SEE NOTE 2	CUSTOMER	8
14	BOLTING: SEE NOTE 1	CUSTOMER	4
13	BOLTING ACC.TO FLANGE STD	CUSTOMER	–
12	WIRE LOCK 2mm	CUSTOMER	1
11	WIRE, STEEL Ø3mm L= *	CUSTOMER	1
10	WASHER 34	RTR	1
09	WASHER	RTR	*
08	NUT	RTR	*
07	SCREW	RTR	*
06	COUPLING PIPE	RTR	*
(05)	COUPLING KIT	RTR	*
04	BRACKET PIPE	RTR	*
03	PIPE BOTTOM	RTR	1
02	PIPE EXTENSION	RTR	*
01	ADAPTER	RTR	1

9150076–518

ISSUED BY	WEEK	PRODUCT CODE	MATERIAL
GU–TKA	0428	REX	SEE PARTS LIST
APPROVED BY: GU–HF	WEEK: 0429	DOC. TYPE: 2	FILE: ACAD
TITLE: PIPE INSERT 5"/8"			

ALL DIMENSIONS ARE IN MILLIMETRES.
TOLERANCES, UNLESS OTHERWISE STATED:
FOR MACHINING: ISO 2768 mK
FOR CASTING: ISO 8062 CT10
FOR WELDING: SS–EN ISO 13920 A, E

FINISH, UNLESS OTHERWISE STATED: 6.3

DWG NO. 9150076–518 | ISSUE 2 | SHEET 1/1

ROSEMOUNT | 1 ST ANGLE | SCALE 1:1

THE COPYRIGHT/OWNERSHIP OF THIS DOCUMENT IS AND WILL REMAIN OURS. THE DOCUMENT MUST NOT BE USED WITHOUT OUR AUTHORIZATION OR BROUGHT TO THE KNOWLEDGE OF A THIRD PARTY. CONTRAVENTION WILL BE PROSECUTED. ROSEMOUNT TANK RADAR AB, SWEDEN.

A2.DWG, 061024.