FOR REFERENCE ONLY - DRAWING NOT TO SCALE

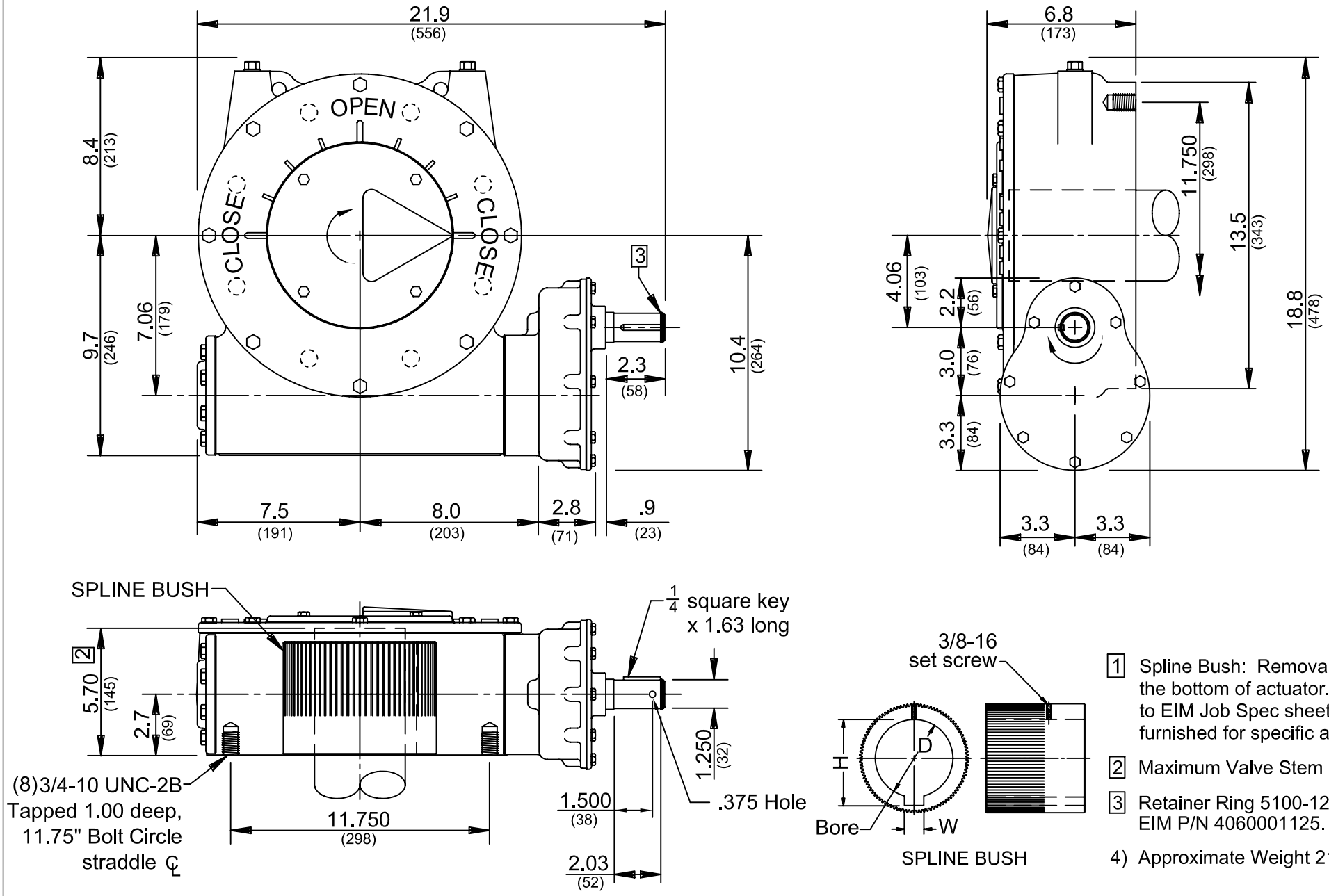

1 Spline Bush: Removable from the bottom of actuator. Refer to EIM Job Spec sheet for Bushing furnished for specific application.

2 Maximum Valve Stem Length

3 Retainer Ring 5100-125, EIM P/N 4060001125.

4) Approximate Weight 218 lbs.

INCHES (MILLIMETERS) .XXX ± .005" .XX ± .020" .X APPROX.

Special Note: Industry standards for manual actuators generally require Clockwise (CW) rotation of handwheel to close valve with Clockwise (CW) rotation of valve shaft. EIM Model WO51-A has CW rotation of actuator input shaft for CW rotation of valve input shaft.

REV	DATE	ERO	BY
A	11/4/96	10522	CML/

EIM CONTROLS
EIM COMPANY, INC.
13840 PIKE ROAD
MISSOURI CITY, TX 77489

WO51-A 11.75"

OUTLINE NO.: 72378-A REV A