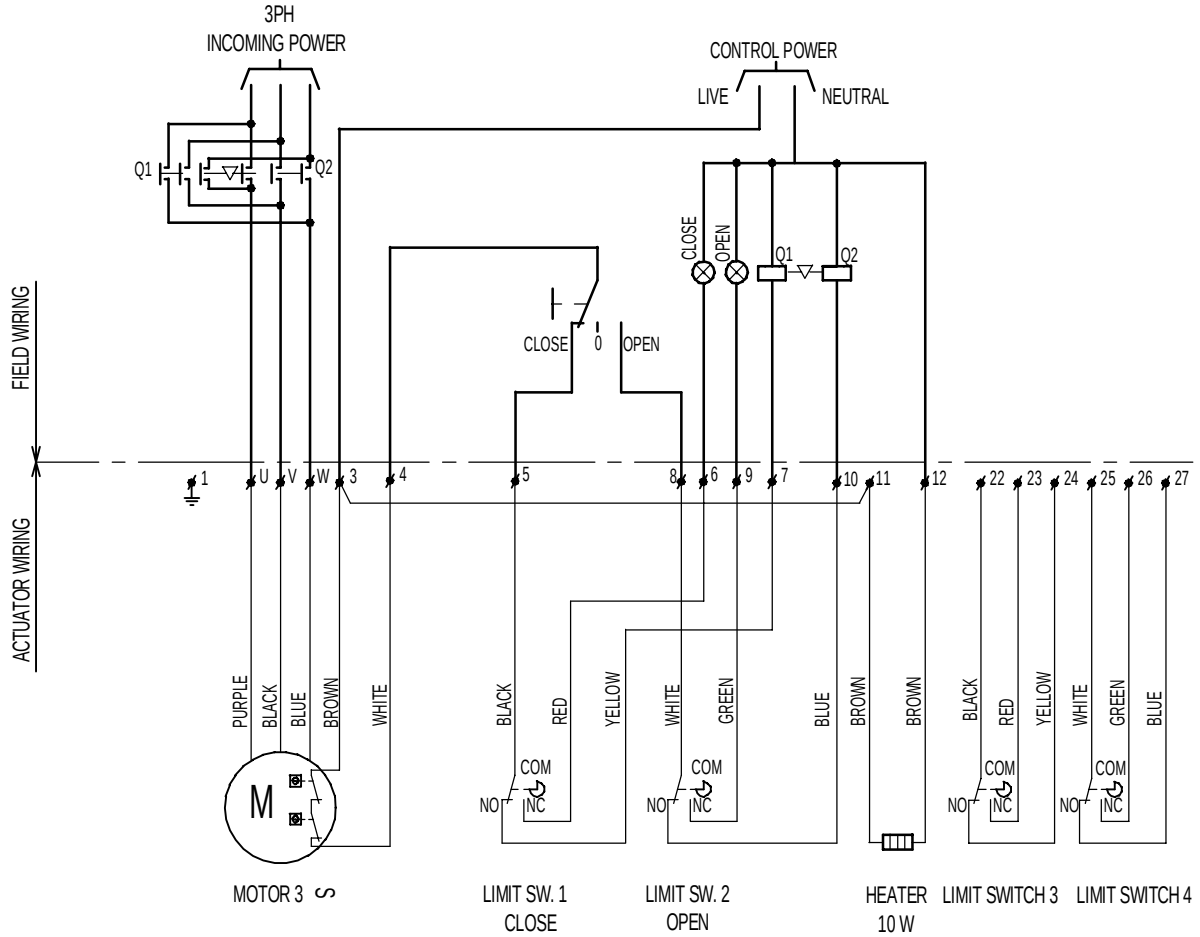

IMPORTANT
Each actuator must be powered through its own individual switch or relay contacts to avoid cross feed between two or more actuators.

LIMIT SWITCHES SHOWN IN MID STROKE

- UNLESS OTHERWISE SPECIFIED DIMENSIONS ARE IN MILLIMETERS.
- REMOVE ALL BURRS AND SHARP EDGES.

TOLERANCE LIMITS UNLESS OTHERWISE SPECIFIED: X. = ± 0.5, X.X = ± 0.25, X.XX = ± 0.1, ANGULAR = ± 1/2°

EL-O-MATIC INTERNATIONAL LOCATION HENGELO (O) THE NETHERLANDS		Format: A3	Drn.: AB	Scale: -	Date: 05/10/2000
Material: -	Title: Wiring diagram basic Motor 3PH EL55 WP/XP			ENOC nr.: H-0786 / Date: 03/07/2001	Par.: RS
				State: Released	
Treatment: -		Drw.nr.: 990.40.023 page 1 of 2			Rev.: B

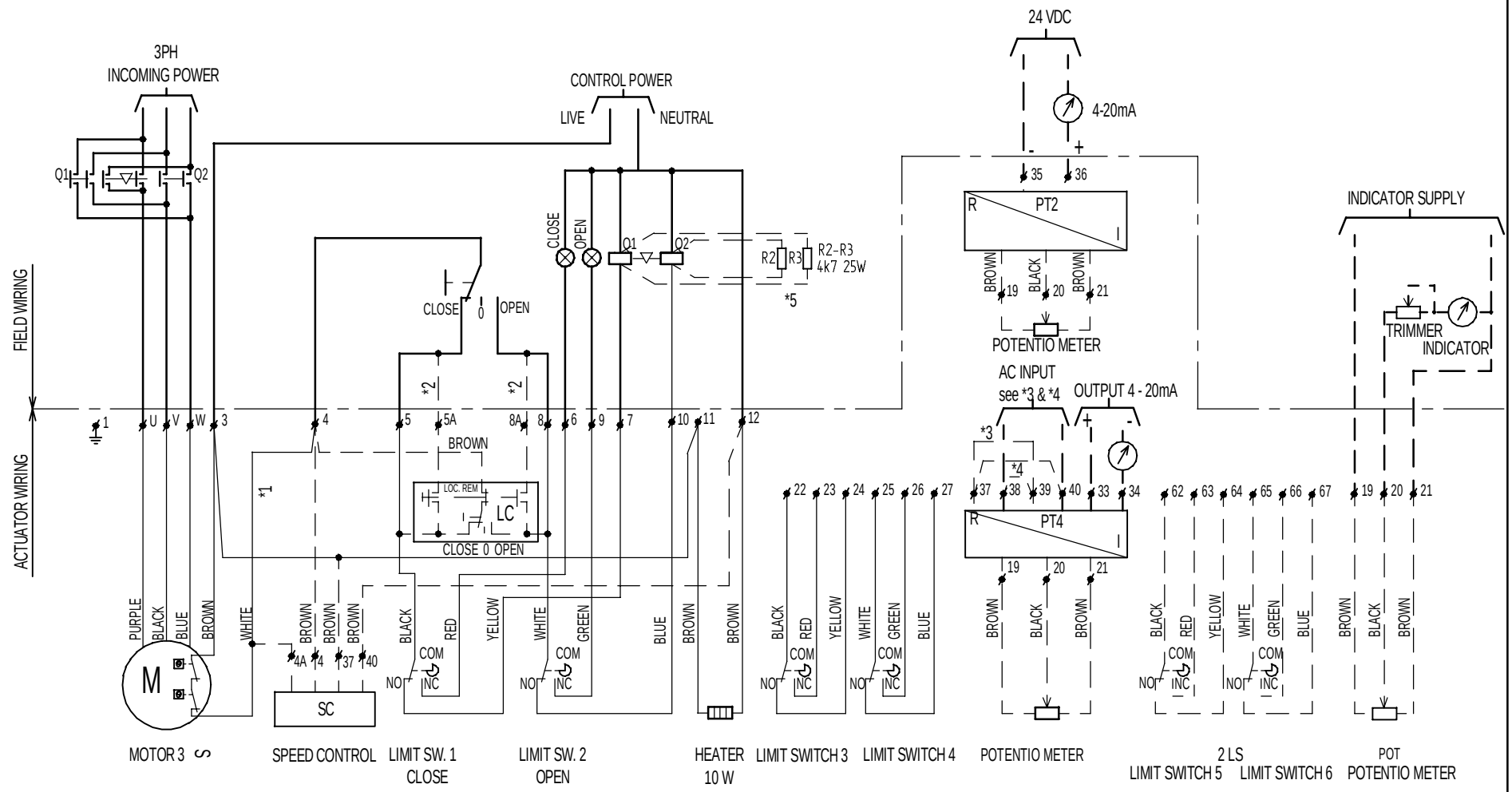

LOCAL CONTROL EX.
IN EXPLOSION PROOF EXECUTION
BOTH LOCAL/REMOTE AND
CLOSE/STOP/OPEN SWITCHES
ARE COMBINED INTO ONE SWITCH

*1 NO WIRE BY SPEED CONTROL SC
*2 CLOSE TO 5A OPEN TO 8A BY LOCAL CONTROL LC
*3 LINK PT4 FOR 220V NR 37 & 39
*4 LINK PT4 FOR 110V NR 37 & 40/38 & 39
*5 RESISTORS ONLY IN COMBINATION WITH SPEEDCONTROL

LIMIT SWITCHES SHOWN IN MID STROKE

KIT OPTIONS, LC_POT_2LS_PT2_PT4_SC, ONLY ON ORDER
KIT OPTIONS SHOWN IN DOTTED LINES

IMPORTANT
Each actuator must be powered through its own individual switch or relay contacts to avoid cross feed between two or more actuators.

- UNLESS OTHERWISE SPECIFIED DIMENSIONS ARE IN MILLIMETERS.
- REMOVE ALL BURRS AND SHARP EDGES.

TOLERANCE LIMITS UNLESS OTHERWISE SPECIFIED: X. = ± 0.5, X.X = ± 0.25, X.XX = ± 0.1, ANGULAR = ± 1/2°

EL-O-MATIC INTERNATIONAL LOCATION HENGELO (O) THE NETHERLANDS		Format: A3	Drn.: AB	Scale: -	Date: 05/10/2000
Material: -	Title: Wiring diagram options Motor 3PH EL55 WP/XP			ENDC nr.: H-0786 / Date: 03/07/2001	Par.: RS
				State: Released	
Treatment: -		Drw.nr.: 990.40.023 page 2 of 2			Rev.: B