APPLIANCE/HVAC PROBE SERIES

NTC Thermistor Probes (36JB)

Applications

- Boiler heating systems
- Fast response applications
- Storage water heaters
- Appliances

Terminal Specifications

0.25” x 0.032” (6.35mm x 0.8mm) or 0.11” x 0.020” (2.8mm x 0.5mm)
Tin-plated brass

Operating Temperature Range

-40° to 180°C (limited exposure to 220°C max)

Thermal Time Constant

3 seconds typical
(25° air to 85°C hot plate)

Values Available

R-T Curve	R25°C	R80°C	R100°C
1	10,000	1256	690
9	10,000	1668	950
15	12,000	1708	952

R-T Curve Information

Curve	Beta	Value
1	25/85	3977±1.5%
9	25/85	3435±1.5%
15	25/85	3740±1.5%

Clip and cup radius sizes

13mm, 15mm, 18mm and 22mm pipe diameters standard
(other sizes optional)

Construction

Case PPS plastic, black and brown color standard (other colors optional)
Cap is aluminum, stainless steel or brass

Insulation Strength

1500VDC/1 second minimum rating

R-T Formula

$1/T = a + b(\ln R) + c(\ln R)^3$

$T = °K + °C + 273.15$

Values for Curve 1

$a = 1.068143559 \times 10^{-3}$

$b = 2.449279583 \times 10^{-4}$

$c = 3.840058397 \times 10^{-8}$

Values for Curve 9

$a = 1.120953374 \times 10^{-3}$

$b = 2.08616283 \times 10^{-4}$

$c = 3.988602001 \times 10^{-7}$

Values for Curve 15

$a = 9.973534012 \times 10^{-4}$

$b = 2.389380822 \times 10^{-4}$

$c = 1.356419659 \times 10^{-7}$

No Mount

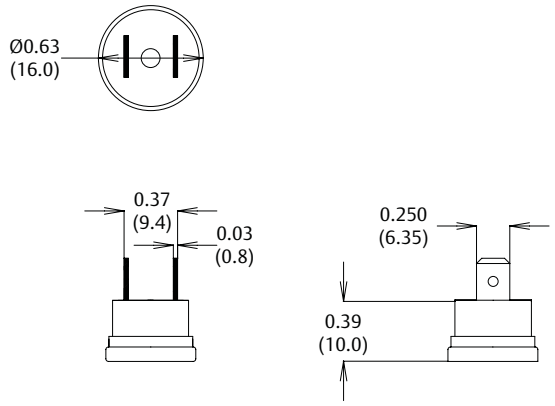

Tube Mount

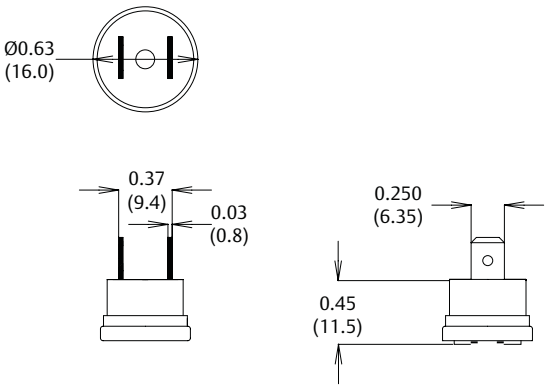

Airstream Mount

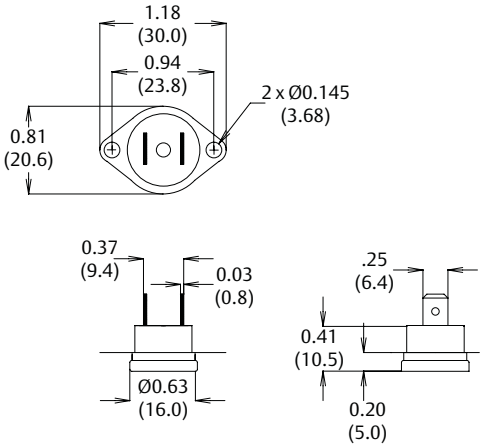

Stud Mount

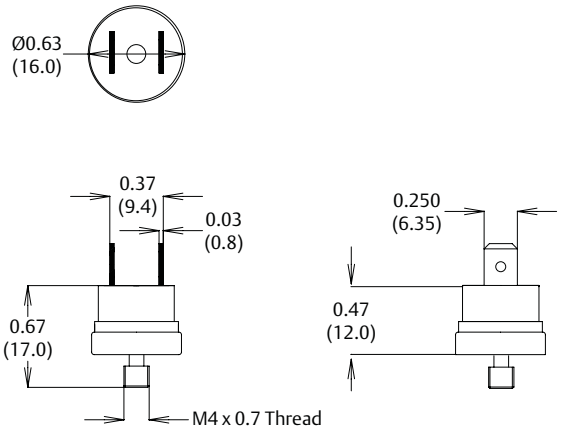

Surface Mount

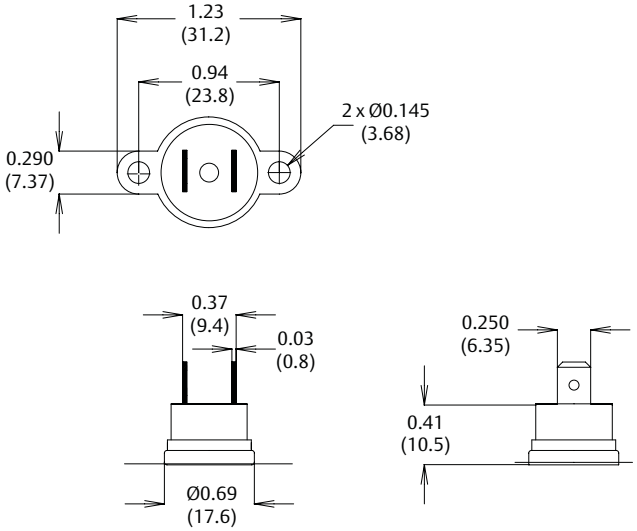

Dimensions are shown in inches and (millimeters).

Resistance vs. Temperature

To find the resistance value of a part at any given temperature, multiply the resistance at 25°C by the multiplier value below.

Temp. °C	Curve 1	Curve 9	Curve 15
-20	9.7060	7.0030	8.2350
-15	7.2940	5.4890	6.3280
-10	5.5319	4.3350	4.9020
-5	4.2324	3.4480	3.8260
0	3.2654	2.7620	3.0080
5	2.5396	2.2270	2.3830
10	1.9903	1.8070	1.8990
15	1.5714	1.4750	1.5240
20	1.2493	1.2110	1.2310
25	1.0000	1.0000	1.0000
30	0.8056	0.8302	0.8171
35	0.6530	0.6928	0.6713
40	0.5327	0.5810	0.5544
45	0.4370	0.4897	0.4603
50	0.3603	0.4145	0.3841
55	0.2986	0.3523	0.3219
60	0.2488	0.3011	0.2711
65	0.2083	0.2582	0.2293
70	0.1752	0.2223	0.1948
75	0.1480	0.1921	0.1662
80	0.1255	0.1668	0.1423
85	0.1070	0.1451	0.1223
90	0.0915	0.1268	0.1055
95	0.0787	0.1112	0.09133
100	0.0680	0.09500	0.07935
105	0.0592	0.08626	0.06917
110	0.0517	0.07634	0.06048
115	0.0450	0.06776	0.05305
120	0.0390	0.06032	0.04668
125	0.0340	0.05384	0.04119
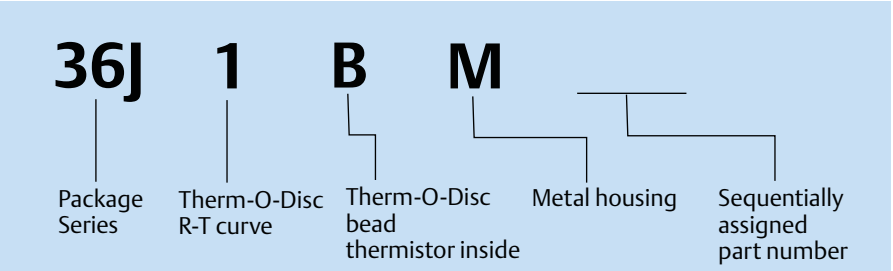
Product Numbering System