June 2016

# H200 Series Relief Valves

W1929_1

***Figure 1.*** *External View of H200 Series Relief Valve*

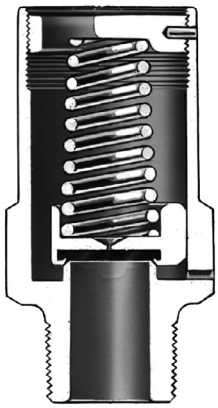

W0120_1

***Figure 2.*** *Sectional View of H200 Series Relief Valve*

## Introduction

The H200 Series Pop™ relief valves, Figures 1 and 2, are self-operated relief valves with preset and pinned spring retainers. The inlet pressure registers directly on a spring-opposed poppet assembly which includes a Nitrile (NBR) disk. When the inlet gas pressure increases above the spring setting, the poppet and disk assembly is pushed away from the orifice. Springs are available that provide any relief pressure setting from 25 to 300 psig / 1.7 to 20.7 bar.

With this simple operation and wide spring setting selection, the H200 Series Pop relief valves may be used where venting to atmosphere is acceptable, where the process gas is compatible with the Nitrile (NBR) disk, where its relief capacity is adequate, and where some pressure relieving tolerance is acceptable. Common applications include use on pneumatic control lines of air drills, jackhammers and other similar equipment, and on farm tap installations. The H200 Series is comprised of the Types H202 and H203 relief valves with the difference being in the inlet connection size.

## Features

- **Space-Saving Construction -** Small relief valve size allows installation where space is limited.
- **Economical -** Low initial cost, easy installation and high capacity per dollar invested reduces total cost of having relief valve capabilities in your system.
- **Durable -** Brass body construction and stainless steel spring reduces susceptibility to corrosion damage and the preset, pinned spring retainer prevents relief valve setpoint tampering.

## Installation

This relief valve may be installed in any position but must be oriented so that gas discharged from the valve does not create a fire, toxic or explosion hazard. The relief valve should be protected from material and conditions that could clog the outlet side of the valve and affect the venting of gas.

A typical installation is shown in Figure 3. A Type P145 raincap is recommended for use with any H200 Series relief valve. Dimensions are shown in Figure 4.

The relief valve and installation should be checked for compliance with all applicable codes.

D100165X012

## Specifications

**Available Configurations and End Connections**
**Type H202:** 3/4 NPT connection
**Type H203:** 1 NPT connection

**Maximum Allowable Relief (Inlet) Pressure**[1]
400 psig / 27.6 bar

**Relief Pressure Ranges**[1]
See Tables 1 and 2

**Flow Capacity**
See Table 2

**Representative Wide-Open Sizing Coefficient**
**$C_g$:** 405

**Construction Materials**
**Body, Poppet and Spring Retainer:** Brass
**Disk:** Nitrile (NBR)
**Spring:** 302 Stainless steel

**Temperature Capabilities**[1]
-20 to 160°F / -29 to 71°C

**Approximate Weight**
0.5 lbs / 0.2 kg

**Option**
Type P145 raincap

1. The pressure/temperature limits in this Bulletin or any applicable code limitations should not be exceeded.

***Table 1.*** *Relief Pressure Spring Ranges*

| RELIEF PRESSURE SETTINGS | | SPRING PART NUMBER | SPRING COLOR | RELIEF SETTING TOLERANCE | |
|---|---|---|---|---|---|
| psig | bar | | | psig | bar |
| 25 to 30<br>31 to 55 | 1.7 to 2.1<br>2.1 to 3.8 | 1H485637022<br>1J152137022 | Pink<br>White | ±5 | ±0.34 |
| 56 to 70<br>65 to 95<br>90 to 130 | 3.9 to 4.8<br>4.5 to 6.5<br>6.2 to 9.0 | 1P391137022<br>T1049037022<br>1F791337022 | Blue<br>Plain<br>Purple | ±8 | ±0.55 |
| 131 to 160<br>161 to 190<br>191 to 235<br>236 to 300 | 9.0 to 11.0<br>11.1 to 13.1<br>13.2 to 16.2<br>16.3 to 20.7 | 1F7912T0012<br>T12699T0012<br>1F790937022<br>1E954637052 | Yellow<br>Green<br>Brown<br>Plain | ±15 | ±1.03 |

***Table 2.*** *Relief Set Pressures and Capacities*

| RELIEF SET PRESSURE[2] | | SET PRESSURE PLUS BUILD-UP | | FLOW CAPACITY[1] | |
|---|---|---|---|---|---|
| psig | bar | psig | bar | SCFH | $Nm^3/h$ |
| 25<br>50<br>75<br>100<br>125 | 1.7<br>3.4<br>5.2<br>6.9<br>8.6 | 50<br>75<br>100<br>120<br>150 | 3.4<br>5.2<br>6.9<br>8.3<br>10.3 | 34,200<br>47,400<br>60,000<br>69,600<br>83,400 | 916<br>1270<br>1608<br>1865<br>2235 |
| 150<br>175<br>200<br>225<br>250 | 10.3<br>12.1<br>13.8<br>15.5<br>17.2 | 180<br>210<br>240<br>270<br>300 | 12.4<br>14.5<br>16.5<br>18.6<br>20.7 | 100,500<br>117,600<br>132,000<br>150,000<br>165,000 | 2693<br>3152<br>3538<br>4020<br>4422 |
| 275<br>300 | 19.0<br>20.7 | 330<br>360 | 22.7<br>24.8 | 180,000<br>195,000 | 4824<br>5226 |

1. This is the initial leak point, the point at which the relief valve begins to discharge.
2. 0.6 Specific Gravity Gas. To convert to equivalent capacities of other gases, multiply the table values by 0.775 for air or 0.789 for nitrogen. Multiply the flow obtained by 0.0268 to convert to ($Nm^3/h$) at 0°C and 1.01 bar.

## Ordering Information

When ordering an H200 Series relief valve, specify the type number and the relief pressure setting required.

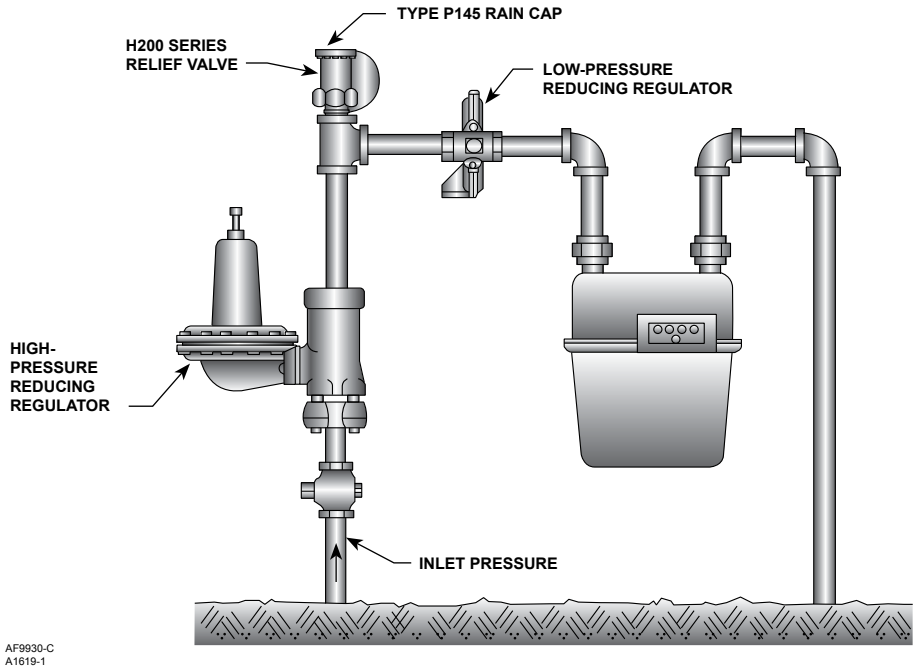


***Figure 3.*** *Typical Farm Tap Installation*

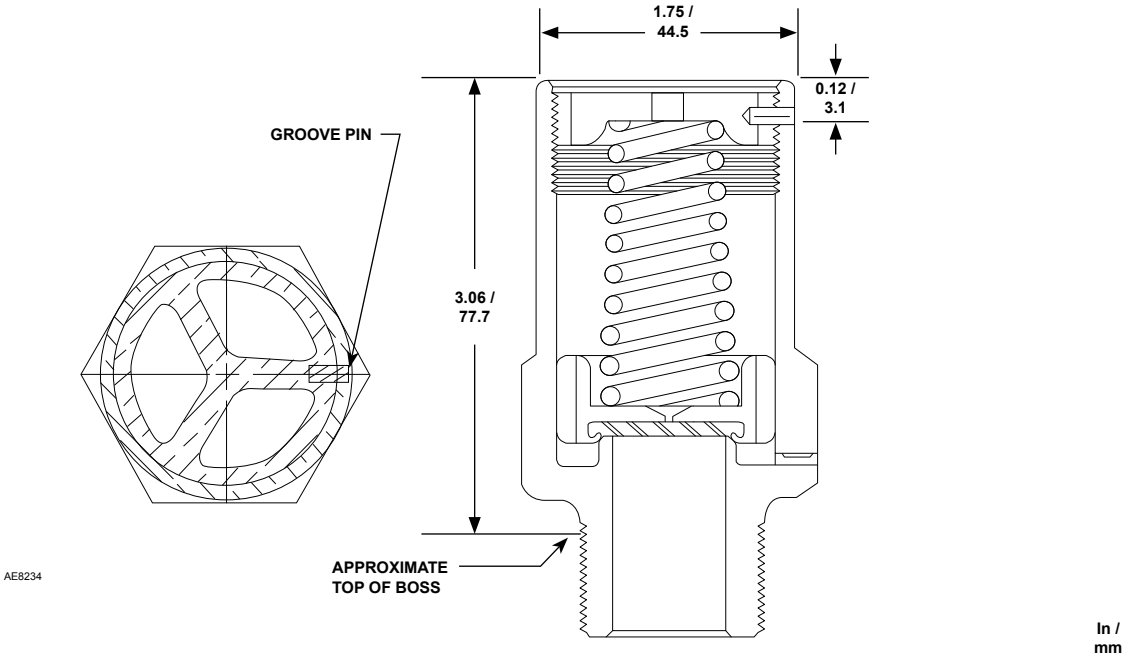


***Figure 4.*** *Dimensions*

**Industrial Regulators**

**Emerson Process Management**
**Regulator Technologies, Inc.**

USA - Headquarters
McKinney, Texas 75070 USA
Tel: +1 800 558 5853
Outside U.S. +1 972 548 3574

Asia-Pacific
Shanghai 201206, China
Tel: +86 21 2892 9000

Europe
Bologna 40013, Italy
Tel: +39 051 419 0611

Middle East and Africa
Dubai, United Arab Emirates
Tel: +971 4811 8100

**Natural Gas Technologies**

**Emerson Process Management**
**Regulator Technologies, Inc.**

USA - Headquarters
McKinney, Texas 75070 USA
Tel: +1 800 558 5853
Outside U.S. +1 972 548 3574

Asia-Pacific
Singapore 128461, Singapore
Tel: +65 6770 8337

Europe
Bologna 40013, Italy
Tel: +39 051 419 0611
Chartres 28008, France
Tel: +33 2 37 33 47 00

Middle East and Africa
Dubai, United Arab Emirates
Tel: +971 4811 8100

**TESCOM**

**Emerson Process Management**
**Tescom Corporation**

USA - Headquarters
Elk River, Minnesota 55330-2445, USA
Tels: +1 763 241 3238
+1 800 447 1250

Europe
Selmsdorf 23923, Germany
Tel: +49 38823 31 287

Asia-Pacific
Shanghai 201206, China
Tel: +86 21 2892 9499

For further information visit www.fisherregulators.com

The Emerson logo is a trademark and service mark of Emerson Electric Co. All other marks are the property of their prospective owners. Fisher is a mark owned by Fisher Controls International LLC, a business of Emerson Process Management.

*The contents of this publication are presented for informational purposes only, and while every effort has been made to ensure their accuracy, they are not to be construed as warranties or guarantees, express or implied, regarding the products or services described herein or their use or applicability. We reserve the right to modify or improve the designs or specifications of such products at any time without notice.*

Emerson Process Management Regulator Technologies, Inc. does not assume responsibility for the selection, use or maintenance of any product. Responsibility for proper selection, use and maintenance of any Emerson Process Management Regulator Technologies, Inc. product remains solely with the purchaser.

©Emerson Process Management Regulator Technologies, Inc., 1979, 2016; All Rights Reserved

EMERSON™
Process Management