Baumann™ 84000 Sanitary Control Valves

The Baumann 84000 sanitary control valves are designed to satisfy the stringent demands of the pharmaceutical and biotechnology industries. These valves are in compliance with 3A Sanitary Standards Inc. requirements. Incorporating reliable class III diaphragm technology, the 84000 valves can handle temperatures up to 160°C (320°F). The uniquely shaped diaphragm, unlike plug style sanitary valves, results in low shear forces in the flow stream, minimizing possible damage to delicate bio-media or altering the consistency of end product.

W9838

84000 Inline Sanitary Valve with Baumann 32 Actuator

W9839

84000 Angle Sanitary Valve with Baumann 32 Actuator and FIELDVUE DVC2000 Digital Valve Controller

W9840

84000 Angle Sanitary Valve with Baumann 54 Actuator and FIELDVUE Digital Valve Controller

Features

- Electropolished internal surfaces
- USP 24 Class VI PTFE, EPDM backed diaphragm
- Designed for Clean-in-Place (CIP) and Sanitize-in-Place (SIP) service
- Self-draining in preferred mounting mode
- Compact size, see figure 9 and tables 5 to 6
- Stainless steel spring case and yoke available
- Fisher™ FIELDVUE™ digital valve controller available for remote calibration and diagnostics

Figure 1. Baumann 84000 NPS 1 Angle Valve Body Sub-Assembly

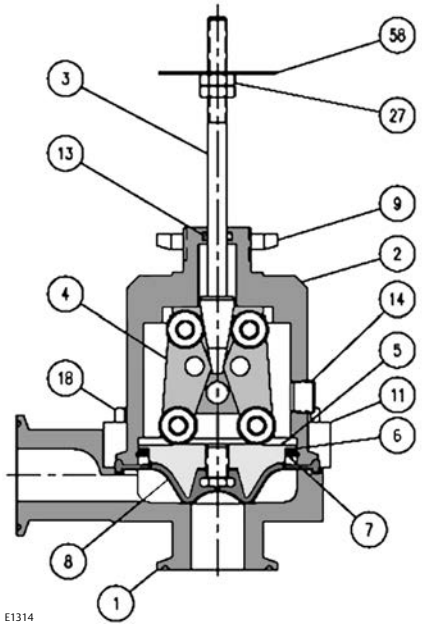

Figure 2. Baumann 84000 NPS 1 Inline Valve Body Sub-Assembly

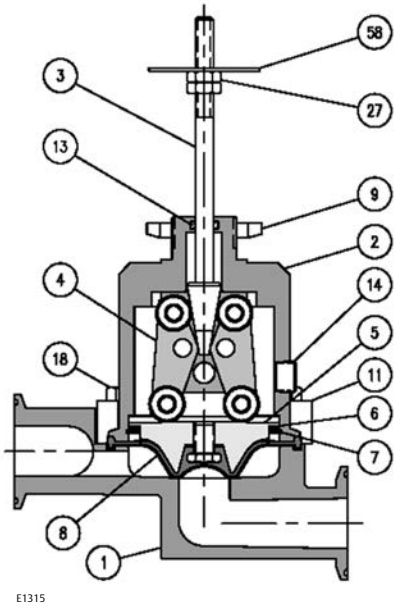

Table 1. Materials of Construction for NPS 1 Angle and Inline Valves

Key Number	Description	Material
1	Valve Body	ASME SA-479 S31603 stainless steel, annealed
2	Bonnet	ASME SA-479 S30400 Annealed
3	Piston Stem Sub-assembly	Stainless Steel
4	Drive Mechanism Sub-assembly	Multiple (predominantly stainless steel)
5	Compressor	S30300 or S30400 stainless steel
6	Wave Spring	S17700 stainless steel
7	Retaining Ring	S30200 stainless steel
8	Diaphragm, Closure Member	PTFE (FDA 21 CFR 177.1550 & USP CL VI compliant) face with Aramid fabric reinforced EPDM (FDA 21 CFR 177.2600 & USP CL VI compliant) backing and S30400 stainless steel insert
9	Drive Nut, Actuator Yoke	S30400 stainless steel
11	Bonnet Flange	ASTM A240 S30400 stainless steel
13	O-Ring, Stem	FKM fluorocarbon
14	Tell Tale Port	S31600 stainless steel
18	Hex Head Cap Screw	Grade B8, Class 1
27	Locknuts	S30400 stainless steel
58	Travel Indicator	S30400 stainless steel

Figure 3. Baumann 84000 NPS 1-1/2 and 2 Angle Valve Body Sub-Assembly

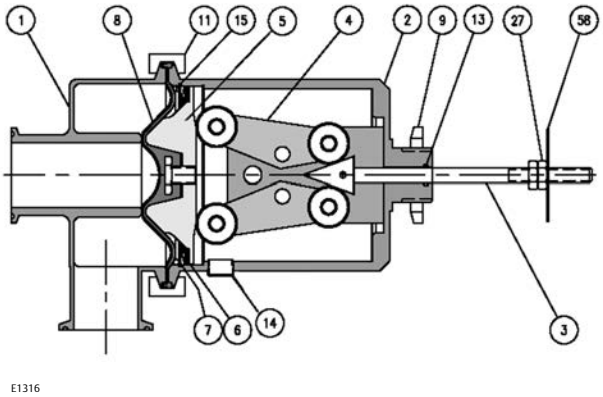

Figure 4. Baumann 84000 Linkage Mechanism

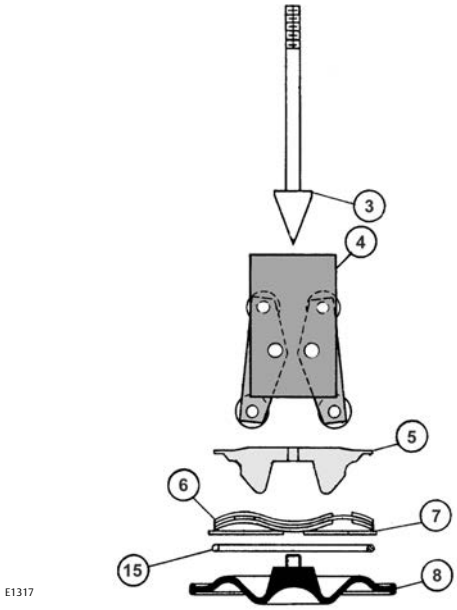

Table 2. Materials of Construction for NPS 1-1/2 and 2 Angle Valves

Key Number	Description	Material
1	Valve Body	ASME SA-479 S31603 stainless steel, annealed
2	Bonnet	ASME SA-479 S30400 Annealed
3	Piston Stem Sub-assembly	Stainless Steel
4	Drive Mechanism Sub-assembly	Multiple (predominantly stainless steel)
5	Compressor	S30300 or S30400 stainless steel
6	Wave Spring	S17700 stainless steel
7	Retaining Ring	S30200 stainless steel
8	Diaphragm, Closure Member	PTFE face with Aramid fabric reinforced EPDM backing and S30400 stainless steel insert. Diaphragm assembly conforms to FDA 21CFR 177.1550 and USP24 Class VI standards.
9	Drive Nut, Actuator Yoke	S30400 stainless steel
11	Clamp	S30400 stainless steel
13	O-Ring, Stem	FKM fluorocarbon
14	Tell Tale Port	S31600 stainless steel
15	O-Ring	EPDM, conforming to FDA 21CFR 177.1550
27	Locknuts	S30400 stainless steel
58	Travel Indicator	S30400 stainless steel

Table 3. Cv Values at Percent Plug Opening(1)

VALVE SIZE	FLOW DIRECTION(2)	ACTUATOR TRAVEL	Cv VERSUS PERCENT OF ACTUATOR TRAVEL OPEN
NPS		Inches	100
1 Angle & Inline	A to B or B to A	0.50	2.00
		0.50	4.00
		0.75	8.00
1-1/2 Angle	A to B	0.50	21.7
		0.75	29.6
	B to A	0.50	17.1
		0.75	24.2
2 Angle	A to B	0.50	29.4
		0.75	42.6
	B to A	0.50	23.5
		0.75	32.5

1. See Fisher Catalog 12 for a full range of flow and sizing information.
2. Flow A to B is recommended for low discharge pressure. Low discharge pressure being defined as near or below atmospheric pressure.

Table 4. Technical Specifications

VALVE SIZE			NPS 1 Angle & Inline			NPS 1-1/2 Angle		NPS 2 Angle	
RATED	Installed with flow from Port A to B	Cv	2	4	8	22	30	29	43
		Kv	1.72	3.44	6.88	18.92	25.8	24.94	36.98
	Installed with flow from Port B to A	Cv	2	4	8	17	24	24	32
		Kv	1.72	3.44	6.88	14.62	20.64	20.64	27.52
TRAVEL		mm	12.7	12.7	19.05	12.7	19.05	12.7	19.05
		inches	0.50	0.50	0.75	0.50	0.75	0.50	0.75
BONNET			Bolted			Clamped			
ACTUATOR TYPE			32 or 54			54			
RANGEABILITY			100:1						
CHARACTERISTIC			Modified Equal Percentage						
SEAT LEAKAGE			ASME/FCI 70-2, Class VI						
MAXIMUM OPERATING PRESSURE			10.34 bar (150 Psi)						
MAXIMUM OPERATING TEMPERATURE			160°C (320°F)						
INTERNAL BODY FINISH (WETTED INTERIOR)			< 30 Ra Microinch / 0.76 Ra Micron (standard) < 20 Ra Microinch / 0.51 Ra Micron (optional - or as required)						
END CONNECTIONS			Sanitary (optional welded ends)						

Figure 5. Preferred Flow Directions for Self-Draining

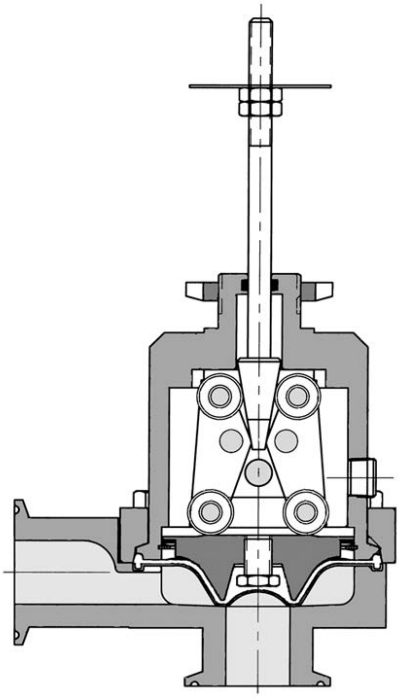

NPS 1 ANGLE VALVE BODY POSITIONED FOR FORWARD FLOW SELF DRAINING FROM PORT A TO B

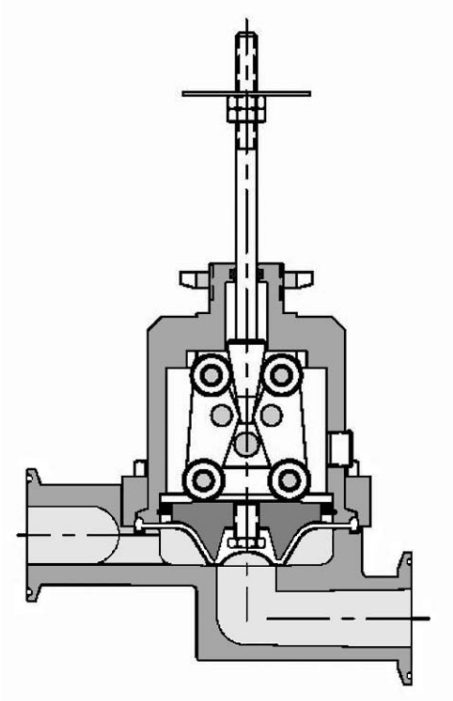

NPS 1 INLINE VALVE BODY POSITIONED FOR FORWARD FLOW SELF DRAINING FROM PORT A TO B

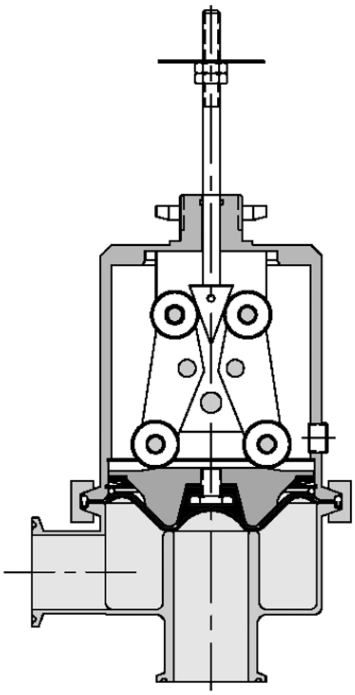

NPS 1-1/2 AND 2 ANGLE VALVE BODY (RECOMMENDED FOR PROCESSES WHERE ATMOSPHERIC OR SLIGHT VACUUM IS PRESENT DOWNSTREAM OF PORT B) [PORTS A AND B MUST BE DRAINED SEPARATELY]

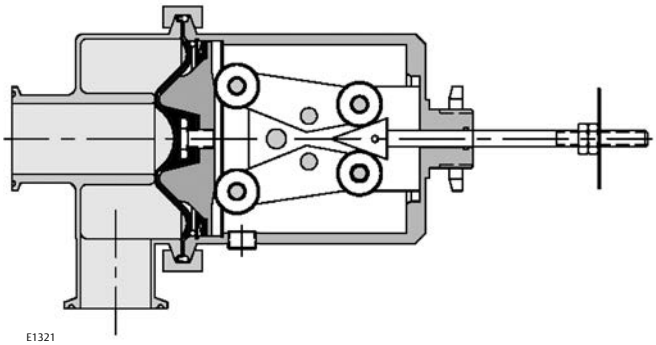

NPS 1-1/2 AND 2 ANGLE VALVE BODY POSITIONED FOR SELF DRAINING FROM PORT B TO A

Figure 6. NPS 1 Angle and Inline Valve Body Orientations

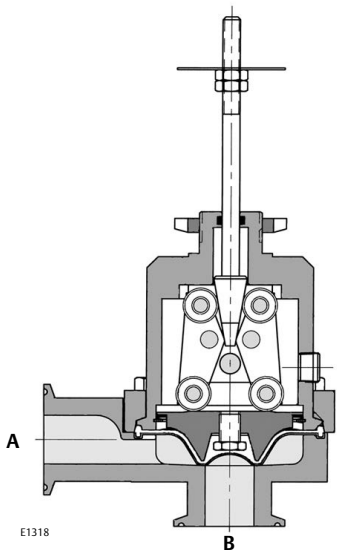

NPS 1 ANGLE VALVE BODY POSITIONED FOR FORWARD FLOW SELF DRAINING FROM PORT A TO B

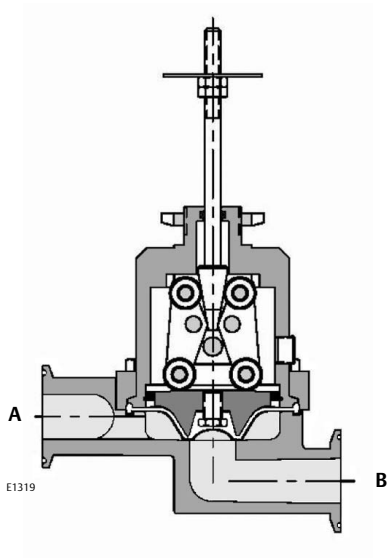

NPS 1 INLINE VALVE BODY POSITIONED FOR FORWARD FLOW SELF DRAINING FROM PORT A TO B

Figure 7. NPS 1-1/2 and 2 Angle Valve Body

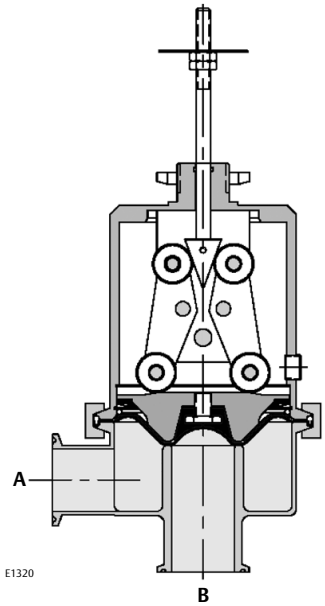

RECOMMENDED FOR PROCESSES WHERE ATMOSPHERIC OR SLIGHT VACUUM IS PRESENT DOWNSTREAM OF PORT B. (PORTS A AND B MUST BE DRAINED SEPARATELY)

Figure 8. NPS 1-1/2 and 2 Angle Valve Body Positioned for Self Draining from Port B to A

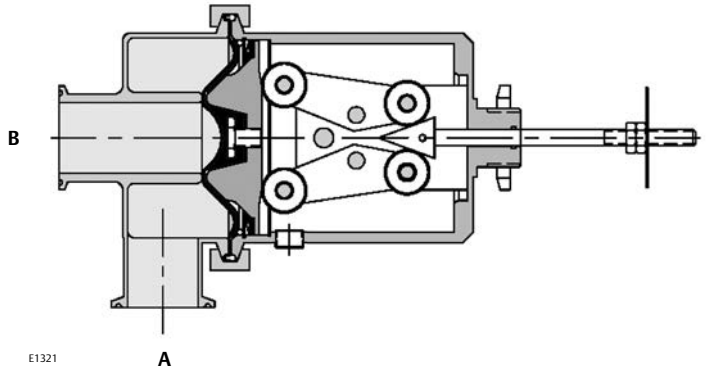

Table 5. Valve Assembly

VALVE SIZE		84000 ANGLE ASSEMBLY		84000 IN-LINE ASSEMBLY	
DN	NPS	kgs	lbs	kgs	lbs
25	1	4.06	9.0	4.31	9.5
40	1-1/2	5.22	11.5	N/A	
50	2	5.22	11.5	N/A	

Figure 9. Dimensional Drawing for Baumann 84000 NPS 1-1/2 and 2 Angle Valve with FIELDVUE Digital Valve Controller

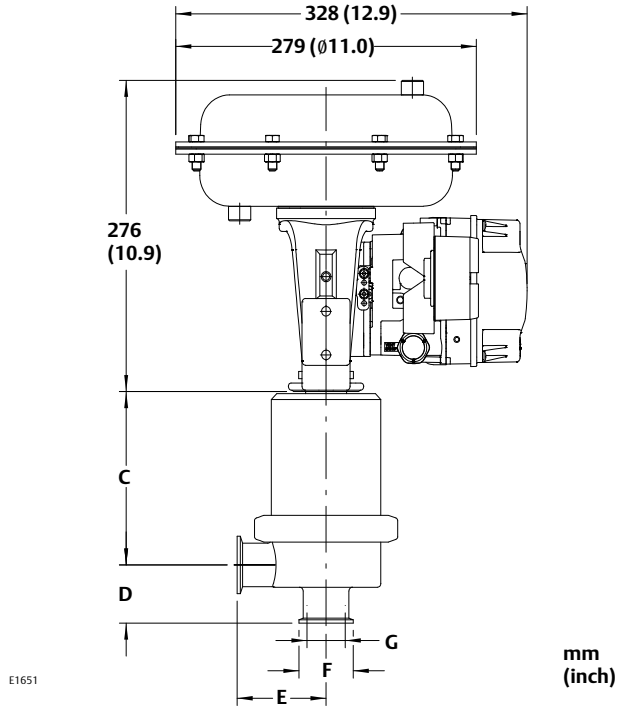

Note: Actuator removal requires 115mm (4.5 inches) vertical clearance.

Figure 10. Dimensional Drawings for Baumann 84000 NPS 1 Angle and Inline Valves

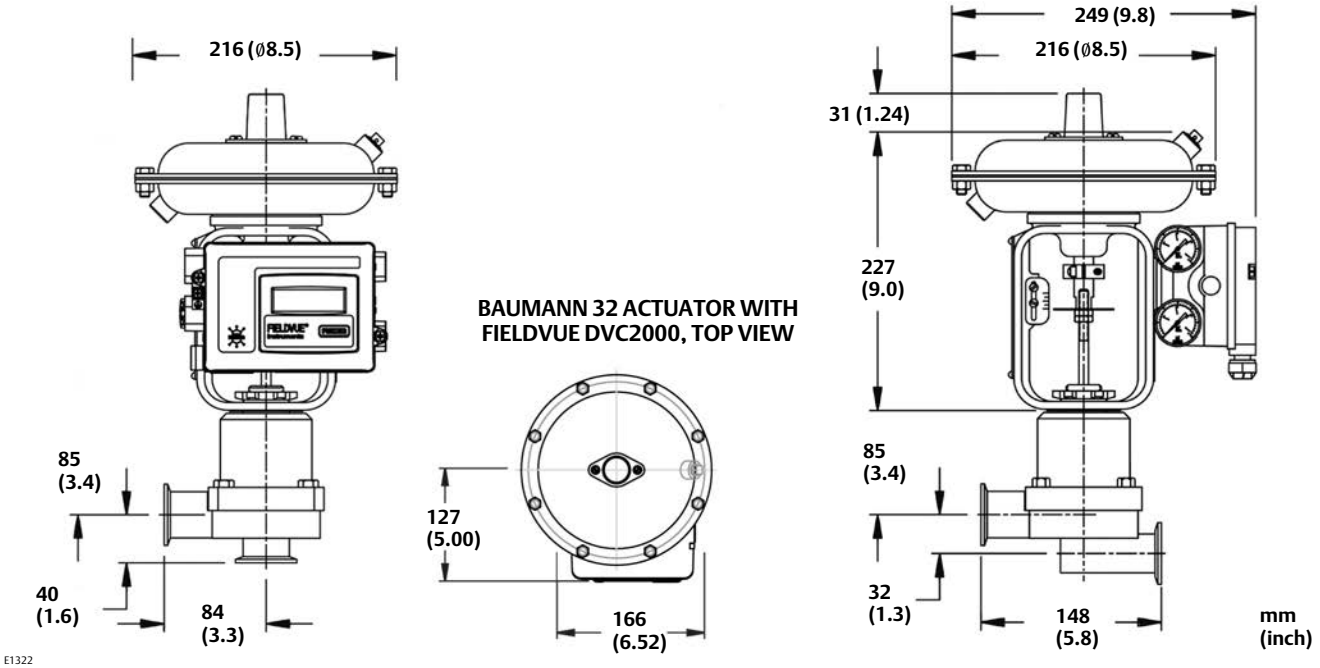

84000 ANGLE VALVE BODY WITH BAUMANN 32 ACTUATOR ATC/FO ACTION, DUAL STOP AND FIELDVUE DVC2000 DIGITAL VALVE CONTROLLER

84000 INLINE VALVE BODY WITH BAUMANN 32 ACTUATOR ATC/FC ACTION, DUAL STOP AND 3660/3661 POSITIONER

Table 6. Valve Assembly and Actuator Weights

VALVE SIZE		C		D		E		F		G	
DN	NPS	mm	inch	mm	inch	mm	inch	mm	inch	mm	inch
40	1-1/2	152.4	6.0	50.8	2.00	82.55	3.25	50.39	1.984	34.44	1.356
50	2	160	6.3	50.8	2.00	88.9	3.50	63.9	2.516	47.63	1.875

Neither Emerson, Emerson Automation Solutions, nor any of their affiliated entities assumes responsibility for the selection, use or maintenance of any product. Responsibility for proper selection, use, and maintenance of any product remains solely with the purchaser and end user.

Baumann, Fisher, and FIELDVUE are marks owned by one of the companies in the Emerson Automation Solutions business unit of Emerson Electric Co. Emerson Automation Solutions, Emerson, and the Emerson logo are trademarks and service marks of Emerson Electric Co. All other marks are the property of their respective owners.

The contents of this publication are presented for informational purposes only, and while every effort has been made to ensure their accuracy, they are not to be construed as warranties or guarantees, express or implied, regarding the products or services described herein or their use or applicability. All sales are governed by our terms and conditions, which are available upon request. We reserve the right to modify or improve the designs or specifications of such products at any time without notice.

Emerson Automation Solutions
Marshalltown, Iowa 50158 USA
Sorocaba, 18087 Brazil
Cernay, 68700 France
Dubai, United Arab Emirates
Singapore 128461 Singapore

www.Fisher.com

© 2009, 2016 Fisher Controls International LLC. All rights reserved.