Fisher™ NotchFlo™ DST Control Valve

Fisher NotchFlo DST control valves offer excellent control of liquid services with high pressure drops and entrained particulate. The dirty service anti-cavitation trims (figure 1) feature multi-stage protection against damaging effects of cavitation and erosive solids. Fisher NotchFlo DST offers trim selections for CL600 3-stage, CL900/1500 4-stage, and CL2500 6-stage.

W9050

Fisher NotchFlo DST Control Valve

Features

- Long Trim Life—NotchFlo DST control valves feature a protected seat design whereby the shutoff function is separate from the throttling areas of the trim.
- Class V Shutoff—Use of hardened metal seats provides tight shutoff to minimize seat erosion.
- High Pressure Drops—Rugged cage guiding of the plug, combined with a staged pressure drop, enables the NotchFlo DST control valve to be effective in a wide range of allowable high pressure drop applications. It can be operated by either spring and diaphragm or piston actuators, depending on plug design (balanced or unbalanced) and application requirements.
- Sour Service Capability—Materials are available for applications handling sour fluids. All references in this document are for NACE MR0175-2002 unless otherwise noted. Contact your Emerson Process Management sales office for information on NACE MR0175/ISO 15156 and NACE MR0103.
- Availability—NotchFlo DST control valves are available in both globe and angle valve body designs.

Specifications

Available Valves

CL600 3-Stage: Level C only
CL900 and CL1500 ≤ NPS 4 4-Stage: Levels A, B, and C
CL1500 ≥ NPS 6 4-Stage and CL2500 6-Stage: Level C only

Valve Sizes and End Connection Styles

CL600 3-Stage: See table 1
CL900 and CL1500 4-Stage: See table 2
CL2500 6-Stage: See table 3

Shutoff Classification per ANSI/FCI 70-2 and IEC 60534-4

Class V: 0.0005 mL/min/psid/in of water at service pressure drop]

Maximum Inlet Pressures and Temperatures(1)

Consistent with applicable CL600, CL900, CL1500, and CL2500 pressure/temperature ratings according to ASME B16.34 unless limited by individual temperature limits shown in tables 6, 7, 8, 9, or 10

Maximum Pressure Drop(1)

See table 4

Construction Materials

Valve Body and Bonnet, Plug, Seat Ring, and Cage: See tables 6, 7, and 8
Other Parts: See table 9

Temperature Capabilities(1)

3-Stage, 4-Stage, and 6-Stage: See tables 6, 7, 8, 9, and 10

Valve Body/Trim Combinations: See tables 6, 7, and 8

Bolting for Sour Applications: See table 10 (CL600 -- 3-Stage only). For all other valve pressure ratings, contact your Emerson Process Management sales office

All Other Parts: See table 9

Flow Coefficients

See Fisher Catalog 12

Flow Characteristic

Linear

Flow Direction

Flow up

Port Diameter, Travel, Stem, Yoke Boss Diameters, Unbalance Area

See tables 22, 23, and 24

Minimum Seating Force

Use Class V seat load requirements (refer to Fisher Catalog 14 or contact your Emerson Process Management sales office)

Noise Level

Use Fisher liquid noise prediction methods available in the Fisher sizing program

Bonnet Style

Plain Bonnet: See figures 2, 3, 4, and 6

Packing Arrangements

Standard Material: Single PTFE V-ring
Optional Material: Double PTFE V-ring, single graphite ribbon filament, and ENVIRO-SEAL packing systems. See bulletin 59.1:061, ENVIRO-SEAL and HIGH-SEAL Packing System for Sliding-Stem Valves (Live-Loaded), D101633X012

Approximate Weights

See table 11

Dimensions

Globe Valve CL600, CL900, and CL1500: See tables 12, 13, 14, and 15
Angle Valve CL600: See table 16
Angle Valve CL900 and CL1500 ≤ NPS 4: See tables 17 and 18
Angle Valve CL1500 ≥ NPS 6 and CL2500: See table 21

1. The pressure/temperature limits in this bulletin and any applicable standard or code limitation for valve should not be exceeded.

Contents

Features 1
Specifications 2
Principle of Operation 4
Characteristics 4
Trim Selection Guidelines 6
Valve Sizing Guidelines 22
Ordering Information 22

Figure 1. NotchFlo DST 4-Stage Trim

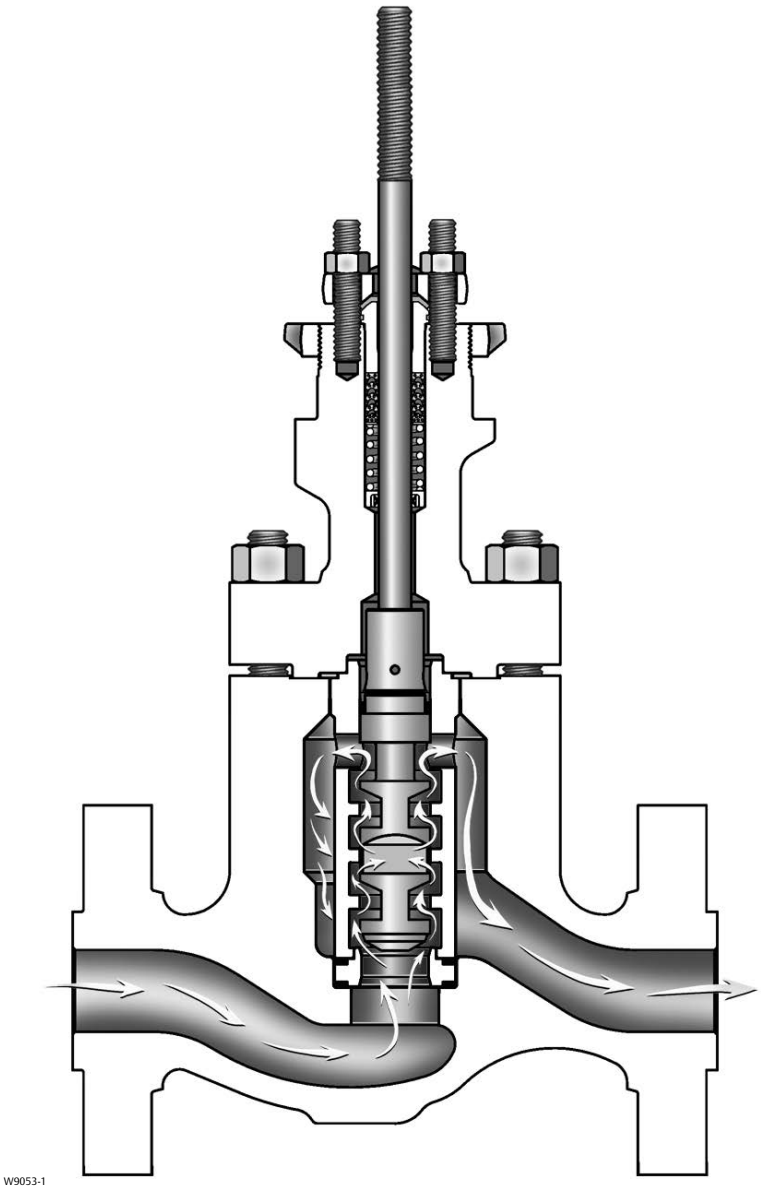

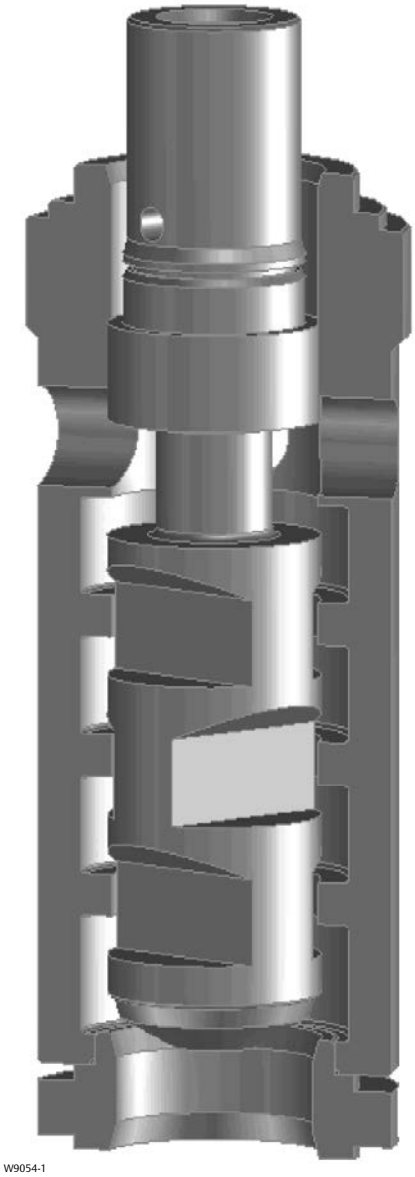

Principle of Operation

NotchFlo DST control valves utilize a high resistance, multi-stage, axial flow path (or passage) where fluid flow is parallel to the axis of the plug and cage (see figure 1).

Pressure reduction occurs throughout the length of the plug; thus individual stages aren't exposed to the full pressure differential. Therefore, trim life is enhanced.

NotchFlo DST trim utilizes a series of notched flow restrictions and expansions to control the pressure drop of the fluid. The amount of pressure drop per stage is controlled to prevent cavitation problems and minimize erosion issues on a properly sized valve.

Flow passage configuration provided by the multi-stage plug and cage design make CL600 3-stage, CL900 and CL1500 4-stage, and CL2500 6-stage valves well-suited for applications involving fluids with entrained particles. This is a potentially serious problem for other anti-cavitation valve designs which are subject to clogged flow passages.

Design of the trim allows for high rangeability.

Characteristics

The NotchFlo DST control valve has a linear flow characteristic.

To maximize seat life, the trim is designed not to have significant flow for the first 15% of travel.

The multi-stage clearance flow design helps prevent high pressure drops in the seating area during throttling at low capacity. This design feature extends the shutoff capability significantly, while enhancing throttling control capability at low travels.

Table 1. CL300 and CL600 3-Stage Available Constructions

VALVE STYLE	VALVE BODY MATERIAL	VALVE SIZE, NPS	END CONNECTION STYLE(1)			
			Screwed	RF or RTJ Flanged	Butt Weld	Socket Weld
Globe	WCC, LCC(2), WC9, CF8M, CF8C	1 and 2	X	X	X	X
		3, 4, 6, and 8	- - -	X	X	- - -
Angle	SA-105, F22, F316, and F347	1 and 2	X	X	X	X
		3, 4, 6, and 8	- - -	X	X	- - -

X = Available Construction.
1. End connection style abbreviations: RF - Raised Face, RTJ - Ring Type Joint.
2. LCC available with RF and RTJ flanged constructions only. Contact your Emerson Process Management sales office for other end connections.

Table 2. CL900 and CL1500, 4-Stage Available Constructions

VALVE STYLE	VALVE BODY MATERIAL	VALVE SIZE, NPS	END CONNECTION STYLE(1)		
			RF or RTJ Flanged	Butt Weld	Socket Weld
Globe	WCC, LCC(2), WC9, CF8M, CF8C	1, 1-1/2, and 2	X	X	X
		3 and 4	X	X	---
Angle	WCC, WC9, CF8M, CF8C	1, 1-1/2, and 2	X	X	X
		3, 4, 6, and 8	X	X	---
	SA-105, F22, F316, and F347	1, 1-1/2, and 2	X	X	X
		3, 4, 6, and 8	X	X	---

X = Available Construction.
1. End connection style abbreviations: RF - Raised Face, RTJ - Ring Type Joint.
2. LCC available with RF and RTJ flanged constructions only. Contact your Emerson Process Management sales office for other end connections.

Table 3. CL2500 6-Stage Available Constructions

VALVE STYLE	VALVE BODY MATERIAL	VALVE SIZE, NPS	VALVE BODY MATERIAL AND END CONNECTION STYLE(1)		
			RF or RTJ Flanged	Butt Weld	Socket Weld
Angle	SA-105, F22, F316, and F347	1	X	X	X
		2, 3, 4, and 6	X	X	- - -

X = Available Construction
1. End connection style abbreviations: RF = Raised Face, RTJ = Ring Type Joint

Table 4. Application Guidelines for NotchFlo DST Trim

VALVE PRESSURE RATING	TRIM TYPE	VALVE SIZE, NPS	$K_C = 1$		$K_C = 0.8$	
			bar	psid	bar	psid
CL600	3-Stage, Level C	All	<103	<1500	N/A	N/A
CL900 and CL1500	4-Stage, Level A	All	<128	<1850	128 - 160	1850 - 2325
	4-Stage, Level B		<130	<1890	130 - 163	1890 - 2360
	4-Stage, Level C		<179	<2600	179 - 224	2600 - 3250
CL2500	6-Stage, Level C	All	<289	<4200	289 - 362	4200 - 5250

Table 5. Typical Applications

POWER/COGENERATION	Boiler feed pump recirculation
	Desuperheater spray water control
	Feedwater start-up regulators
	Condensate pump recirculation
	Superheater bypass
OIL AND GAS PRODUCTION	Water injection pump recirculation
	Produced/waste water injection well control
	Separator letdown
	Chemical injection pump bypass
NATURAL GAS PROCESSING	Contactor (rich amine) letdown
	Rich and lean amine pump spillback
REFINING	Contactor letdown
	Rich and lean amine pump spillback
	Pump spillback/recirculation
	Various high pressure and low pressure separator letdown

Trim Selection Guidelines

Refer to the following descriptions and tables 6, 7, and 8 as guidelines for the selection of appropriate trims.

- **Trim 277--** Trim 277 is the standard trim for carbon steel and alloy steel valve bodies and recommended for general and severe service applications up to 316°C (600°F). See tables 6, 7, and 8 for operating temperature ranges per valve size. Typical applications for Trim 277 include services in boiler feedwater, water, non-sour hydrocarbons, and other non-sour liquids.

- **Trim 279--** Trim 279 should be used for sour liquid service in carbon steel, alloy steel, and stainless steel valve bodies. Trim 279 complies with the metallurgical requirements of NACE MR0175-2002. Trim 279 can be used up to 316°C (600°F). See tables 6, 7, and 8 for operating temperature ranges per valve size.

- **Trim 282--** Trim 282 should be used in stainless steel valve bodies only. Trim 282 complies with the metallurgical requirements of NACE MR0175-2002 and can be used up to 316°C (600°F). See table 6, 7, or 8 for operating temperature ranges per valve size.

- **Trim 283--** Trim 283 should be used in stainless steel valve bodies only. Trim 283 complies with the metallurgical requirements of NACE MR0175-2002 and can be used up to 316°C (600°F). See tables 6, 7, and 8 for operating temperature ranges per valve size.

- **Trim 284--** Trim 284 should be used in duplex stainless steel valve bodies only. Trim 284 can be used up to 316°C (600°F). See tables 6, 7, and 8 for operating temperature ranges.

- **Trim 285--** Trim 285 is the standard trim for stainless steel valve bodies and is optional for use in carbon steel and alloy steel valve bodies. This trim is recommended for general and severe service applications up to 316°C (600°F). Trim 285 can be used in sour or moderately corrosive services and complies with the metallurgical requirements of NACE MR0175-2002. See tables 6, 7, and 8 for operating temperature ranges per valve size.

- **Trim 286--** Trim 286 is available for use in severe service applications, including high pressure separators. Trim 286 can be used in highly corrosive services and complies with the metallurgical requirements of NACE MR0103.

Table 6. CL600 3-Stage Metal Trim Material Combinations and Valve Body/Trim Temperature Capabilities[1]

TRIM DESIGNATION	VALVE PLUG	VALVE PLUG STEM	CAGE	SEAT RING	VALVE BODY MATERIAL	VALVE SIZE	OPERATING TEMPERATURE	
						NPS	°C	°F
277	S44004	S20910	S17400 H900 (NPS 1-4) S17400 H1075 (NPS 6-8)	S44004	SA105, WCC, F22 WC9, LCC	1, 2, 3, 4, 6, and 8	-29 to 316	-20 to 600
					CF8M, S31600	1	-29 to 149	-20 to 300
						2	-29 to 121	-20 to 250
						3 and 4	-29 to 93	-20 to 200
279[2]	R30006 or R30016	S20910	R30006 or R30016	R30006 or R30016	S31600, CF8M, S34700, CF8C	1	-29 to 260	-20 to 500
						2	-29 to 204	-20 to 400
						3 and 4	-29 to 177	-20 to 350
					SA105, WCC, LF2 LCC	1 and 2	-29 to 316	-20 to 600
						3	-29 to 232	-20 to 450
						4	-29 to 204	-20 to 400
					CD3MN (Duplex SST)	1, 2, 3, and 4	-29 to 316	-20 to 600
282[2]	R30016 (NPS 1) S31600/ CoCr-A (NPS 2-8)	S20910	S20910	S31600/ CoCr-A	S31600, CF8M	1, 2, 3, 4, and 6	-29 to 316	-20 to 600
						8	-29 to 232	-20 to 450
283[2]	R30016 (NPS 1) S34700/ CoCr-A (NPS 2-8)	S20910	S20910	S34700/ CoCr-A	S34700, CF8C	1, 2, 3, 4, and 6	-29 to 316	-20 to 600
						8	-29 to 232	-20 to 450
284	R30016 (NPS 1) S31803/ CoCr-A (NPS 2-8)	S20910	S32760	S31803/ CoCr-A	CD3MN (Duplex SST)	1, 2, 3, 4, 6, and 8	-29 to 316	-20 to 600
285	S20910 Annealed	S20910	S17400 H1150 Double HT	S31600/ CoCr-A	SA105, WCC, LF2, LCC	1, 2, 3, 4, 6, and 8	-29 to 316	-20 to 600
					S31600, CF8M	1	-29 to 204	-20 to 400
						2	-29 to 177	-20 to 350
						3 and 4	-29 to 121	-20 to 250
						6	-29 to 177	-20 to 350
						8	-29 to 121	-20 to 250
286	N07718	S20910	S32550	S31600/ CoCr-A or S32550	SA105, WCC, F22, WC9, LCC	All	(3)	(3)

1. For metal trim parts only.
2. Contact your Emerson Process Management sales office for information on NACE MR0175/ISO 15156 and NACE MR0103.
3. Contact your Emerson Process Management sales office for operating temperature ranges.

Table 7. CL900/CL1500 4-Stage Metal Trim Material Combinations and Temperature Capabilities[1]

TRIM DESIGNATION	VALVE PLUG	VALVE PLUG STEM	CAGE	SEAT RING	VALVE BODY MATERIAL	VALVE SIZE	OPERATING TEMPERATURE	
						NPS	°C	°F
277	S44004	S20910	S17400 H900 (NPS 1-4) S17400 H1075 (NPS 6-8)	S44004	SA105, WCC, F22 WC9, LCC	1, 1-1/2, 2, 3, 6, and 8	-29 to 316	-20 to 600
						4	-29 to 288	-20 to 550
					CF8M, S31600	1	-29 to 177	-20 to 350
						1-1/2	-29 to 149	-20 to 300
						2	-29 to 121	-20 to 250
						3 and 4	-29 to 93	-20 to 200
279[2]	R30006 or R30016	S20910	R30006 or R30016	R30006 or R30016	S31600, CF8M	1	-29 to 268	-20 to 550
						1-1/2	-29 to 232	-20 to 450
						2	-29 to 204	-20 to 400
						3	-29 to 177	-20 to 350
						4	-29 to 121	-20 to 250
					SA105, WCC, LF2 LCC	1, 1-1/2, and 2	-29 to 316	-20 to 600
						3	-29 to 204	-20 to 400
						4	-29 to 93	-20 to 200
					CD3MN (Duplex SST)	1, 1-1/2, 2, 3, and 4	-29 to 316	-20 to 600
282[2]	R30016 (NPS 1) S31600/ CoCr-A (NPS 1-1/2 to 8)	S20910	S20910	S31600/ CoCr-A	S31600, CF8M	1, 1-1/2, 2, and 3	-29 to 316	-20 to 600
						4	-29 to 93	-20 to 200
						6 and 8	-46 to 316	-50 to 600
283[2]	R30016 (NPS 1) S34700/ CoCr-A (NPS 1-1/2 to 8)	S20910	S20910	S34700/ CoCr-A	S34700, CF8C	1, 1-1/2, 2, and 3	-29 to 316	-20 to 600
						4	-29 to 93	-20 to 200
						6 and 8	-46 to 316	-50 to 600
284	R30016 (NPS 1) S31803/ CoCr-A (NPS 1-1/2 to 8)	S20910	S32760	S31803/ CoCr-A	CD3MN (Duplex SST)	1, 1-1/2, 2, and 3	-29 to 316	-20 to 600
						4	-29 to 204	-20 to 400
						6 and 8	-29 to 316	-20 to 600
285	S20910 Annealed	S20910	S17400 H1150 Double HT	S31600/ CoCr-A	SA105, WCC, LF2, LCC	1, 1-1/2, 2, 3, 4, 6, and 8	-29 to 316	-20 to 600
					S31600, CF8M	1	-29 to 232	-20 to 450
						1-1/2	-29 to 205	-20 to 400
						2	-29 to 177	-20 to 350
						3	-29 to 121	-20 to 250
						4	-29 to 93	-20 to 200
						6	-29 to 149	-20 to 300
						8	-29 to 121	-20 to 250
286	N07718	S20910	S32550	S31600/ CoCr-A or S32550	SA105, WCC, F22, WC9, LCC	All	(3)	(3)

1. For metal trim parts only.
2. Contact your Emerson Process Management sales office for information on NACE MR0175/ISO 15156 and NACE MR0103.
3. Contact your Emerson Process Management sales office for operating temperature ranges.

Table 8. CL2500 6-Stage Metal Trim Material Combinations and Temperature Capabilities(1)

TRIM DESIGNATION	VALVE PLUG	VALVE PLUG STEM	CAGE	SEAT RING	VALVE BODY MATERIAL	VALVE SIZE	OPERATING TEMPERATURE	
						NPS	°C	°F
277	S44004	S20910	S17400 H1075	S44004	SA105, WCC F22, WC9, LCC	1, 2, 3, 4, and 6	-29 to 316	-20 to 600
					S31600	1	-29 to 149	-20 to 300
						2	-29 to 121	-20 to 250
						3 and 4	-29 to 93	-20 to 200
279(2)	R30006 or R30016	S20910	R30006 or R30016	R30006 or R30016	S31600, CF8M, S34700, CF8C	1	-29 to 204	-20 to 400
						2	-29 to 288	-20 to 550
						3 and 4	-29 to 177	-20 to 350
					SA105, WCC, LF2 LCC	1 and 2	-29 to 316	-20 to 600
						3	-29 to 260	-20 to 500
						4	-29 to 232	-20 to 450
					CD3MN (Duplex SST)	1, 2, 3, and 4	-29 to 316	-20 to 600
282(2)	R30016 (NPS 1) S31600/ CoCr-A (NPS 2-8)	S20910	S20910	S31600/ CoCr-A	S31600, CF8M	1, 2, 3, 4, and 6	-29 to 316	-20 to 600
283(2)	R30016 (NPS 1) S34700/ CoCr-A (NPS 2-8)	S20910	S20910	S34700/ CoCr-A	S34700, CF8C	1, 2, 3, 4, and 6	-29 to 316	-20 to 600
284	R30016 (NPS 1) S31803/ CoCr-A (NPS 2-8),	S20910	S32760	S31803/ CoCr-A	CD3MN (Duplex SST)	1, 2, 3, 4, and 6	-29 to 316	-20 to 600
285	S20910 Annealed	S20910	S17400 H1150 Double HT	S31600/ CoCr-A	SA105, WCC, LF2, LCC	1, 2, 3, 4, and 6	-29 to 316	-20 to 600
					S31600, CF8M	1	-29 to 163	-20 to 325
						2	-29 to 210	-20 to 410
						3	-29 to 135	-20 to 275
						4 and 6	-29 to 149	-20 to 300
286	N07718	S20910	S32550	S31600/ CoCr-A or S32550	SA105, WCC, F22, WC9, LCC	All	(3)	(3)

1. For metal trim parts only.
2. Contact your Emerson Process Management sales office for information on NACE MR0175/ISO 15156 and NACE MR0103.
3. Contact your Emerson Process Management sales office for operating temperature ranges.

Table 9. Construction Materials and Temperature Capabilities for Parts Other than Valve Body and Trim

PART		MATERIAL	TEMPERATURE CAPABILITIES	
			°C	°F
Valve plug stem		S20910 S31600	- - -(4)	- - -(4)
Spring-loaded valve plug seal(6)	Backup ring	S41600 S31600 (NACE) S41000 S34700 (NACE) S31803	-29 to (4)	-20 to (4)
	Retaining ring	18-8 N07750 (NACE)	- - -(4)	- - -(4)
	Seal ring	Modified PTFE w/ R30003 Spring (standard) UHMWPE(5) with N10276 Spring	-73 to 316(3) -73 to 93	-100 to 600(3) -100 to 200
	Anti-extrusion rings	PEEK (PolyEtherEtherKetone)	- - -(4)	- - -(4)
Bonnet gasket (CL600)		Graphite/S31600	- - -(4)	- - -(4)
Bonnet gasket (CL900, CL1500, and CL2500)		N06600/Graphite	- - -(4)	- - -(4)
Seat ring gasket		N06600/Graphite	- - -(4)	- - -(4)
Cage gasket		N06600/Graphite	- - -(4)	- - -(4)
Valve Body-to-bonnet bolting(1) See table 10 for NACE bolting materials and temperature limits.	Studs Nuts	Steel SA193-B7 (all valve body materials) Steel SA194-2H (all valve body materials)	-29 to (4) (WCC, WC9, SA105, F22) -48 to (4) (LCC, CF8M, S31600, and S34700) -29 to 316 (CD3MN [Duplex SST])	-20 to (4) (WCC, WC9, SA105, F22) -55 to (4) (LCC, CF8M, S31600, and S34700) -20 to 600 (CD3MN [Duplex SST])
	Studs Nuts	Steel SA193-B7M for sour service Steel SA194-2HM for sour service	-29 to (4) (WCC and SA105) -46 to (4) (LCC)	-20 to (4) (WCC and SA105) -50 to (4) (LCC)
	Studs Nuts	S31600 SA193-B8M (strain hardened) (CF8M and S31600 valve body mat'ls) S31600 SA194-8M (CF8M and S31600 valve body mat'ls)	(CF8M and S31600)- - -(4)	(CF8M and S31600)- - -(4)
	Studs Nuts	S20910 (SA479-XM-19)(2) (CF8M and S31600 valve body mat'ls) Steel SA194-7	(CF8M and S31600)- - -(4)	(CF8M and S31600)- - -(4)
Packing		PTFE V-ring	-40 to 232	-40 to 450
		Graphite ribbon filament (oxidizing service to 700°F)	- - -(4)	- - -(4)
		Graphite ULF (non-environmental service)	- - -(4)	- - -(4)
Packing follower, spring, or lantern ring		S31600 S34700 S31803	- - -(4)	- - -(4)
Packing box ring		S31600	- - -(4)	- - -(4)
Packing flange, studs, or nuts		S31600	- - -(4)	- - -(4)

1. Valve body materials with which these bolting materials may be used are shown in parentheses.
2. This stud material is not listed in ASME B16.34.
3. With PEEK anti-extrusion rings in non-oxidizing service. Maximum operating temperature limited to 260°C (500°F) in oxidizing service.
4. These materials are not limiting factors.
5. Ultra high molecular weight polyethylene
6. Not required for NPS 1 or 1-1/2 CL900 and CL1500 4-stage valves.

Table 10. CL600 3-Stage Bolting Materials and Temperature Limits for Bolting Compliance with NACE MR0175-2002, NACE MR0175/ISO 15156, and NACE MR0103

VALVE BODY MATERIAL		BOLTING MATERIAL	TEMPERATURE CAPABILITIES	
			°C	°F
Non-exposed bolting (Standard)				
WCC, CF8M (316 SST), and CD3MN (Duplex SST)	Studs	Steel SA-193-B7	-48[2] to 427 (WCC and CF8M) -29 to 316 (CD3MN [Duplex SST])	-55[2] to 800 (WCC and CF8M) -20 to 600 (CD3MN [Duplex SST])
	Nuts	Steel SA-194-2H		
Exposed bolting (Optional) May require derating of valve[1] when these body-to-bonnet bolting materials are used				
WCC, CF8M (316 SST), and CD3MN (Duplex SST)	Studs	Steel SA-193-B7M	-48[2] to 427 (WCC and CF8M) -29 to 316 (CD3MN [Duplex SST])	-55[2] to 800 (WCC and CF8M) -20 to 600 (CD3MN [Duplex SST])
	Nuts	Steel SA-194-2HM		

1. Derating may be required for valves rated at CL600. Contact your Emerson Process Management sales office for assistance in determining the derating of valves when these body-to-bonnet bolting materials are used. Derating is not required for CL900 and CL1500 valves.
2. -29°C (-20°F) with WCC valve body material.

Table 11. Approximate Weights (Valve and Bonnet Assemblies)

VALVE DESIGN	VALVE SIZE, NPS	PRESSURE RATING	KILOGRAMS		POUNDS	
			Flanged	Socket Weld(1), Butt Weld, Screwed(2)	Flanged	Socket Weld(1), Butt Weld, Screwed(2)
3-Stage Globe Valves	1	CL600	20	15	45	35
	2		40	30	90	70
	3		70	50	155	110
	4		120	80	265	175
	6		275	230	610	510
	8		510	445	1130	980
4-Stage Globe Valves	1	CL900 and CL1500	58	42	128	93
	1-1/2		75	48	165	106
	2		95	85	210	185
	3		185	140	405	310
	4		340	280	750	620
3-Stage Angle Valves	1	CL600	20	---	44	---
	2		42	---	93	---
	3		86	---	190	---
	4		140	---	315	---
	6		300	---	660	---
	8		605	---	1340	---
4-Stage Angle Valves	1	CL900 and CL1500	50	40	110	90
	1-1/2		55	45	120	95
	2		95	95	210	210
	3		185	---	405	---
	4		285	---	625	---
	6		560	---	1230	---
	8		1260	---	2770	---
4-Stage Cast Angle Valves	1	CL900 and CL1500	40	32	88	71
	1-1/2		43	35	95	77
	2		75	57	165	126
	3		148	118	326	260
	4		243	200	536	441
	6		523	443	1153	977
	8		1062	920	2342	2029
6-Stage Angle Valves	1	CL2500	64	67	140	148
	2		180	170	405	375
	3		500	473	1110	1043
	4		465	433	1025	955
	6		1060	1030	2330	2271

1. SWE available on NPS 1, 1-1/2, and 2 only.
2. Screwed end available on NPS 1 and 2 CL600 only.

Figure 2. Typical CL300 and CL600 3-Stage NotchFlo DST Valve Dimensions (also see tables 12 and 13)

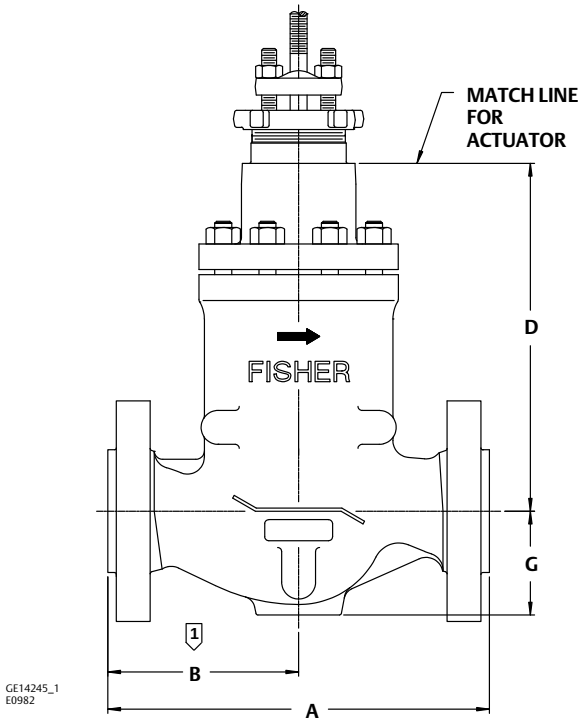

NOTES:
1 $B = \frac{A}{2}$

Table 12. CL300 and CL600 3-Stage Globe Valve Dimensions with Plain Bonnet

VALVE SIZE, NPS	A(1)							
	CL300				CL600			
	Scrd or SWE	BWE	RF	RTJ	Scrd or SWE	BWE	RF	RTJ
	mm							
1	---	---	197	---	209.6	209.6	209.6	209.6
2	---	---	267	---	285.8	285.8	285.8	289.1
3	---	---	318	---	---	336.6	336.6	339.9
4	---	---	368	---	---	393.7	393.7	396.7
6	---	---	473	489	---	508	508	511
8	---	---	568	584	---	609.6	609.6	612.6
	Inches							
1	---	---	7.75	---	8.25	8.25	8.25	8.25
2	---	---	10.50	---	11.25	11.25	11.25	11.38
3	---	---	12.50	---	---	13.25	13.25	13.38
4	---	---	14.50	---	---	15.50	15.50	15.62
6	---	---	18.62	19.25	---	20	20	20.12
8	---	---	22.38	23.00	---	24	24	24.12

1. RF: raised-face flanges, RTJ: ring-type-joint flanges, BWE: buttwelding ends, SWE: socketweld ends; Scrd: screwed

Table 13. CL300 and CL600 3-Stage Globe Valve Dimensions with Plain Bonnet

VALVE SIZE, NPS	YOKE BOSS DIAMETER	D	G
	mm		
1	71	220.7	60.5
2	71	260.4	77.7
	90	257.3	77.7
3	90	318.5	96.8
4	90	329.4	128.5
	127	375.4	128.5
6	90	515.6	138.1
	127	549.3	138.1
8	90	653	189.6
	127	697.6	189.6
	Inches		
1	2-13/16	8.69	2.38
2	2-13/16	10.25	3.06
	3-9/16	10.13	3.06
3	3-9/16	12.54	3.81
4	3-9/16	12.97	5.06
	5	14.78	5.06
6	3-9/16	20.3	5.44
	5	21.63	5.44
8	3-9/16	25.71	7.46
	5	27.46	7.46

Figure 3. Typical CL900 and CL1500 ≤ NPS 4, 4-Stage NotchFlo DST Globe Valve Dimensions (also see tables 14 and 15)

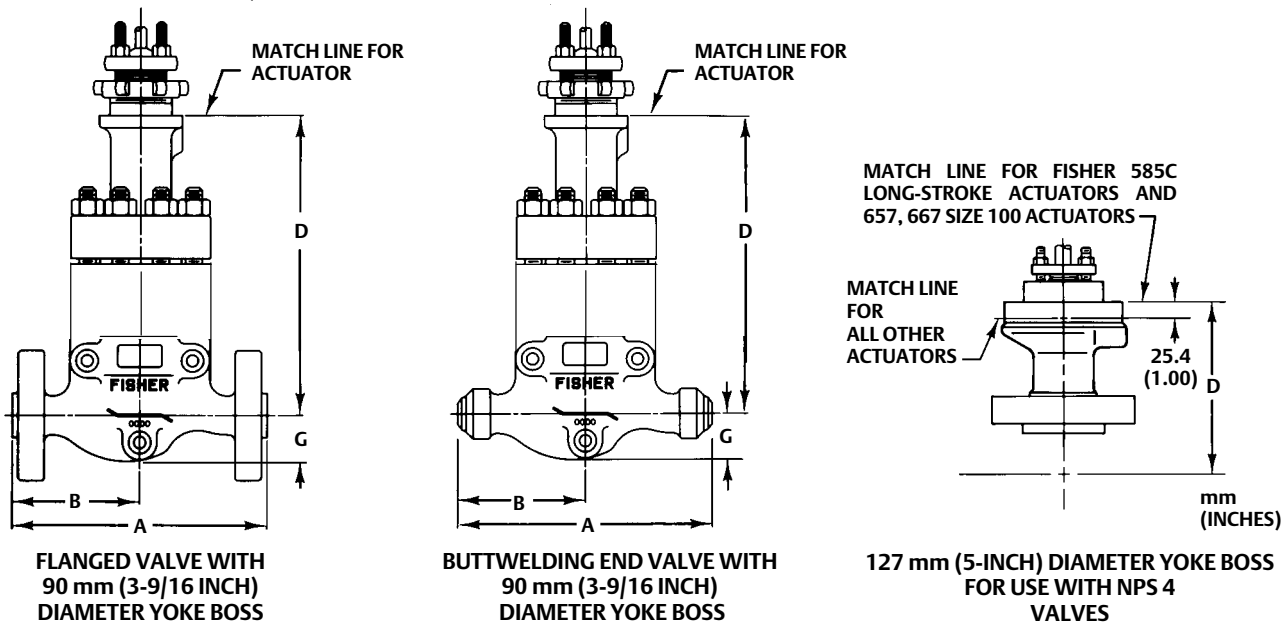

Figure 4. Typical CL300 3-Stage, CL600 3-Stage, CL900 4-Stage, and CL1500 4-Stage NotchFlo DST Angle Valve Dimensions (also see tables 16, 17 and 18)

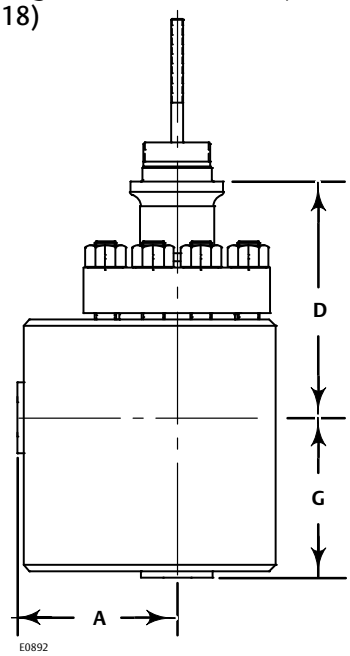

Figure 5. Typical CL1500 4-Stage NotchFlo DST Cast Angle Valve Dimensions (also see tables 19 and 20)

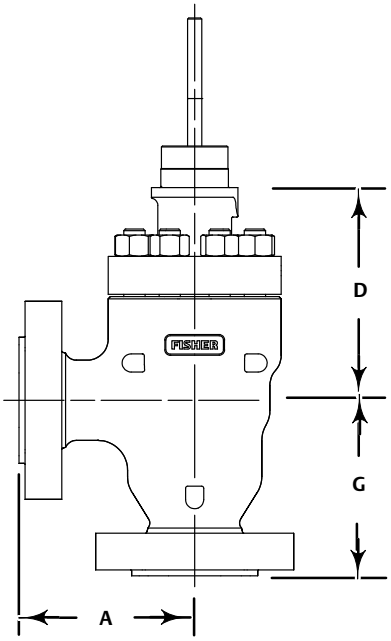

Table 14. CL900 and CL1500 ≤ NPS 4, 4-Stage Globe Valve Dimensions with Plain Bonnet

VALVE SIZE, NPS	A(1)					
	CL900		CL1500			
	RF	RTJ	BWE	SWE	RF	RTJ
	mm					
1	292	292	---	292	292	292
1-1/2	298	298	---	292	298	298
2	375	378	375	375	375	378
3	442	445	460	---	460	464
4	511	514	530	---	530	533
	Inches					
1	11.5	11.5	---	11.5	11.5	11.5
1-1/2	11.75	11.75	---	11.5	11.75	11.75
2	14.75	14.88	14.75	14.75	14.75	14.88
3	17.38	17.50	18.12	---	18.12	18.25
4	20.12	20.25	20.88	---	20.88	21.00
VALVE SIZE, NPS	B					
	CL900		CL1500			
	RF	RTJ	BWE	SWE	RF	RTJ
	mm					
1	148	148	---	148	148	148
1-1/2	151	151	---	148	151	151
2	187	189	187	187	187	189
3	221	222	230	---	230	232
4	229	230	238	---	238	240
	Inches					
1	5.81	5.81	---	5.81	5.81	5.81
1-1/2	5.93	5.93	---	5.81	5.93	5.93
2	7.38	7.44	7.38	7.38	7.38	7.44
3	8.69	8.75	9.06	---	9.06	9.12
4	9.00	9.06	9.38	---	9.38	9.44

1. RF: raised-face flanges, RTJ: ring-type-joint flanges, BWE: buttwelding ends, SWE: socketweld ends

Table 15. CL900 and CL1500 ≤ NPS 4, 4-Stage Globe Valve Dimensions

VALVE SIZE, NPS	D			G
	Plain Bonnet			
	71 mm (2-13/16 Inch) Yoke Boss	90 mm (3-9/16 Inch) Yoke Boss	127 mm (5-Inch) Yoke Boss	
	mm			
1	305	---	---	59
1-1/2	294	---	---	75
2	---	333	---	77
3	---	412	---	121
4	---	427	495	175
	Inches			
1	12.01	---	---	2.32
1-1/2	11.57	---	---	2.94
2	---	13.12	---	3.06
3	---	16.24	---	4.75
4	---	16.79	19.48	6.88

Table 16. CL300 and CL600 3-Stage Angle Valve Dimensions with Plain Bonnet

VALVE SIZE, NPS	A(1)		YOKE BOSS DIAMETER	D	G(1)	
	RF	RTJ			RF	RTJ
	mm					
1	76	76	71	165.3	88	88
2	96	96	71	185.3	123	123
			90	182.1	123	123
3	118	118	90	224.1	149	149
4	151	151	90	232.1	174	174
			127	278.2	174	174
6(2)	177	177	90	335.6	235.5	235.5
			127	369.3	235.5	235.5
8(2)	221	221	90	306	418	418
			127	350.5	418	418
	Inches					
1	2.99	2.99	2-13/16	6.51	3.46	3.46
2	3.78	3.78	2-13/16	7.3	4.84	4.84
			3-9/16	7.17	4.84	4.84
3	4.64	4.64	3-9/16	8.82	5.87	5.87
4	5.94	5.94	3-9/16	9.14	6.85	6.85
			5	10.95	6.85	6.85
6(2)	6.97	6.97	3-9/16	13.21	9.27	9.27
			5	15.54	9.27	9.27
8(2)	8.7	8.7	3-9/16	12.05	16.46	16.46
			5	13.8	16.46	16.46

1. RF: Raised-face flanges, RTJ: Ring-type-joint flanges.
2. NPS 6 and 8 are only available in CL1500.

Table 17. CL900 and CL1500, 4-Stage Angle Valve Dimensions with Plain Bonnet

VALVE SIZE, NPS	A(1)		
	CL900 - CL1500		
	RF	RTJ	SWE
	mm		
1	115	115	74
1-1/2	140	140	74
2	99	100	102
3	120	122	- - -
4	140	142	- - -
6	184	187	- - -
8	260	263	- - -
	Inches		
1	4.50	4.50	2.88
1-1/2	5.50	5.50	2.88
2	3.88	3.94	4.00
3	4.75	4.81	- - -
4	5.50	5.56	- - -
6	7.25	7.35	- - -
8	10.24	10.33	- - -

1. RF: raised-face flanges, RTJ: ring-type-joint flanges, SWE: socketweld ends

Table 18. CL900 and CL1500, 4-Stage Angle Valve Dimensions

VALVE SIZE, NPS	YOKE BOSS DIAMETER	D	G
		Plain Bonnet	
	mm		
1	71	260	70 (FLG) or 64 (SWE)
1-1/2	71	274	83 (FLG) or 70 (SWE)
2	90	251	153
3	90	294	197
4	90	319	223
	127	387	223
6	127	497	290
8	127	613	403
	Inches		
1	2-13/16	10.25	2.75 (FLG) or 2.50 (SWE)
1-1/2	2-13/16	10.75	3.25 (FLG) or 2.75 (SWE)
2	3-9/16	9.87	6.00
3	3-9/16	11.56	7.75
4	3-9/16	12.54	8.75
	5	15.23	8.75
6	5	19.57	11.4
8	5	24.14	15.85

Table 19. CL1500, 4-Stage Cast Angle Valve Dimensions with Plain Bonnet

VALVE SIZE, NPS	A(1)			
	CL900 - CL1500			
	RF	RTJ	BWE	SWE
	mm			
1	142	142	142	142
1-1/2	152	152	152	152
2	184	184	184	184
3	235	235	235	---
4	273	273	273	---
6	353	353	353	---
8	416	416	416	---
	Inches			
1	5.59	5.59	5.59	5.59
1-1/2	5.98	5.98	5.98	5.98
2	7.24	7.24	7.24	7.24
3	9.25	9.25	9.25	---
4	10.75	10.75	10.75	---
6	13.9	13.9	13.9	---
8	16.38	16.38	16.38	---

1. RF: raised-face flanges, RTJ: ring-type-joint flanges, SWE: socketweld ends

Table 20. CL1500, 4-Stage Cast Angle Valve Dimensions

VALVE SIZE, NPS	YOKE BOSS DIAMETER	D	G			
		Plain Bonnet	RF	RTJ	BWE	SWE
	mm					
1	71	247	142	142	142	142
1-1/2	71	260	152	152	152	152
2	90	237	184	184	184	184
3	90	285	235	235	235	---
4	90	339	273	273	273	---
	127	407				
6	127	464	353	353	353	---
8	127	665	416	416	416	---
	Inches					
1	2-13/16	9.72	5.59	5.59	5.59	5.59
1-1/2	2-13/16	10.24	5.98	5.98	5.98	5.98
2	3-9/16	9.33	7.24	7.24	7.24	7.24
3	3-9/16	11.22	9.25	9.25	9.25	---
4	3-9/16	13.35	10.75	10.75	10.75	---
	5	16.02				
6	5	18.27	13.9	13.9	13.9	---
8	5	26.18	16.38	16.38	16.38	---

Figure 6. Typical CL2500 6-Stage NotchFlo DST Angle Valve Dimensions (also see table 21)

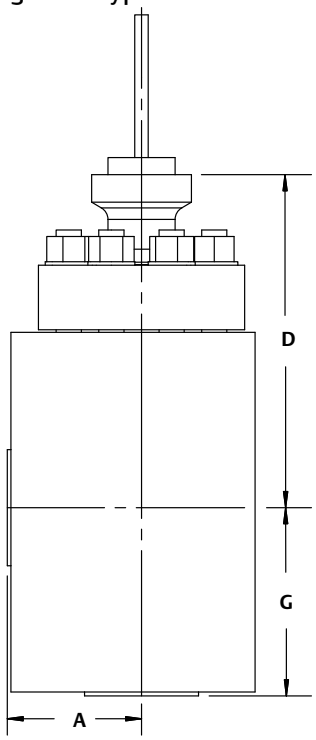

Table 21. CL2500 6-Stage Angle Valve Dimensions with Plain Bonnet

VALVE SIZE, NPS	A(1)				YOKE BOSS DIAMETER	D	G(1)			
	RF	RTJ	BWE	SWE		Plain Bonnet	RF	RTJ	BWE	SWE
	mm									
1	114	114	---	114	90	280.6	104	104	---	104
2	169	169	169	---	90	347.6	173	173	173	---
3	222	222	222	---	127	563.2 (FLG) 578.2 (BWE)	237	237	237	---
4	190	193	194	---	127	470.3	250	253	254	---
6	254	257	259	---	127	554.1 (FLG) 594.1 (BWE)	350	353	355	---
	Inches									
1	4.49	4.49	---	4.49	3-9/16	11.05	4.09	4.09	---	4.09
2	6.65	6.65	6.65	---	3-9/16	13.69	6.81	6.81	6.81	---
3	8.74	8.74	8.74	---	5	22.17 (FLG) 22.76 (BWE)	9.33	9.33	9.33	---
4	7.48	7.58	7.64	---	5	20.83	9.84	9.94	10	---
6	10.00	10.10	10.2	---	5	21.82 (FLG) 23.39 (BWE)	13.78	13.88	13.98	---

1. RF: Raised-face flanges, RTJ: Ring-type-joint flanges

Table 22. CL600 3-Stage Port Diameter, Travel, Stem, Yoke Boss Diameter, and Unbalance Area

VALVE SIZE, NPS	PORT DIAMETER	TRAVEL	STEM DIAMETER	YOKE BOSS DIAMETER	UNBALANCE AREA
	mm				cm^2
1	25.4	9.5	12.7	71	0.1(2)
2	38.1	9.5	12.7	71	0.3(2)
			19.1(1)	90(1)	
3	55.6	15.9	19.1	90	0.5(2)
4	73.2	19.1	19.1	90	0.4(2)
			25.4(1)	127(1)	
6	111.1	19.1	19.1	90	0.5(2)
			25.4(1)	127(1)	
8	136.5	25.4	19.1	90	0.6(2)
			25.4(1)	127(1)	
	Inch				$Inch^2$
1	1.0	0.375	1/2	2-13/16	0.02(2)
2	1.5	0.375	1/2	2-13/16	0.05(2)
			3/4(1)	3-9/16(1)	
3	2.19	0.625	3/4	3-9/16	0.07(2)
4	2.88	0.75	3/4	3-9/16	0.06(2)
			1(1)	5(1)	
6	4.38	0.75	3/4	3-9/16	0.08(2)
			1(1)	5(1)	
8	5.38	1	3/4	3-9/16	0.09(2)
			1(1)	5(1)	

1. Optional.
2. Balanced trim, PTTC (pressure tends to close).

Table 23. CL900 and CL1500, 4-Stage Port Diameter, Travel, Stem, Yoke Boss Diameter, and Unbalance Area

VALVE SIZE, NPS	PORT DIAMETER	TRAVEL	STEM DIAMETER	YOKE BOSS DIAMETER	UNBALANCE AREA
	mm				cm^2
1	17.8	6.4	12.7	71	2.5(1)
1-1/2	25.4	6.4	12.7	71	5.1(1)
2	38.1	9.5	19.1	90	0.3(2)
3	55.6	15.9	19.1	90	0.5(2)
4	73.2	19.1	19.1	90	0.4(2)
			25.4 (optional)	127 (optional)	
6	111.1	25.4	25.4	127	0.6(2)
8	136.5	31.8	31.8	127	0.6(2)
	Inch				$Inch^2$
1	0.7	0.25	1/2	2-13/16	0.39(1)
1-1/2	1.0	0.25	1/2	2-13/16	0.79(1)
2	1.5	0.375	3/4	3-9/16	0.05(2)
3	2.19	0.625	3/4	3-9/16	0.07(2)
4	2.88	0.75	3/4	3-9/16	0.06(2)
			1 (optional)	5 (optional)	
6	4.38	1	1	5	0.09(2)
8	5.38	1.25	1-1/4	5	0.1(2)

1. Unbalanced trim, PTTO (pressure tends to open).
2. Balanced trim, PTTC (pressure tends to close).

Table 24. CL2500 6-Stage Port Diameter, Travel, Stem, Yoke Boss Diameter, and Unbalance Area

VALVE SIZE, NPS	PORT DIAMETER	TRAVEL	STEM DIAMETER	YOKE BOSS DIAMETER	UNBALANCE AREA
	mm				cm^2
1	17.8	6.4	19.1	90	2.5(1)
2	38.1	9.5	19.1	90	0.3(2)
3	55.6	15.9	25.4	127	0.5(2)
4	73.2	19.1	25.4	127	0.4(2)
6	111.1	25.4	25.4	127	0.6(2)
	Inch				$Inch^2$
1	0.7	0.25	3/4	3-9/16	0.39(1)
2	1.5	0.375	3/4	3-9/16	0.05(2)
3	2.19	0.625	1	5	0.07(2)
4	2.88	0.75	1	5	0.06(2)
6	4.38	1	1	5	0.09(2)

1. Unbalanced trim, PTTO (pressure tends to open).
2. Balanced trim, PTTC (pressure tends to close).

Valve Sizing Guidelines

Standard ISA equations, sizing procedures from Catalog 12, or Fisher Specification Manager can be used to size NotchFlo DST control valves.

Noise calculations are best performed by using Fisher Specification Manager. The serial stage configuration of the NotchFlo DST design reduces valve trim noise significantly.

Selection of the correct trim can be made by determining the K_C value from table 4.

Ensure that the correct K_C value for the appropriate valve size, trim type, and pressure drop are selected.

Ordering Information

When ordering, specify:

Application Information

1. Process liquid—State particle size and type of entrained impurities, if any.
2. Specific gravity of liquid
3. Temperature and vapor pressure of liquid
4. Critical pressure
5. Range of flowing inlet pressures
6. Pressure drops
   a. Range of flowing pressure drops
   b. Maximum at shutoff
7. Flow rates
   a. Minimum controlled flow
   b. Normal flow
   c. Maximum flow
8. Required C_V
9. Line size and schedule

Valve Body Information

To determine what information is needed for ordering the valve body and trim, refer to the Specifications section. Review the description at the right of each specification or in the referenced tables, figures, and bulletins, and indicate the desired choice wherever a selection is to be made.

Neither Emerson, Emerson Process Management, nor any of their affiliated entities assumes responsibility for the selection, use or maintenance of any product. Responsibility for proper selection, use, and maintenance of any product remains solely with the purchaser and end user.

Fisher and NotchFlo are marks owned by one of the companies in the Emerson Process Management business unit of Emerson Electric Co. Emerson Process Management, Emerson, and the Emerson logo are trademarks and service marks of Emerson Electric Co. All other marks are the property of their respective owners.

The contents of this publication are presented for informational purposes only, and while every effort has been made to ensure their accuracy, they are not to be construed as warranties or guarantees, express or implied, regarding the products or services described herein or their use or applicability. All sales are governed by our terms and conditions, which are available upon request. We reserve the right to modify or improve the designs or specifications of such products at any time without notice.

Emerson Process Management
Marshalltown, Iowa 50158 USA
Sorocaba, 18087 Brazil
Cernay, 68700 France
Dubai, United Arab Emirates
Singapore 128461 Singapore

www.Fisher.com

© 2003, 2015 Fisher Controls International LLC. All rights reserved.