# Type MR108

## Introduction

This installation guide provides instructions for installation, startup and adjustment. To receive a copy of the instruction manual, contact your local Sales Office or view a copy at www.fisherregulators.com. For further information refer to Type MR108 Instruction Manual, Form 5875, D103247X012.

## P.E.D. Category

This product may be used as a pressure accessory with pressure equipment in the following Pressure Equipment Directive 97/23/EC categories. It may also be used outside of the Pressure Equipment Directive using sound engineering practice (SEP) per table below.

| PRODUCT SIZE | CATEGORY |
|---|---|
| DN 25 / NPS 1 | SEP |
| DN 50 / NPS 2 | II |
| DN 80 / NPS 3 | II |
| DN 100 / NPS 4 | II |

## Specifications

**Available Constructions**

**Type MR108 with low-pressure actuator:**
Direct-operated large multi-purpose backpressure regulator with 0.34 to 2.4 bar / 5 to 35 psig pressure range

**Type MR108 with high-pressure actuator:**
Direct-operated large multi-purpose backpressure regulator with 1.7 to 20.7 bar / 25 to 300 psig pressure range

**Body Sizes and End Connection Styles**

**DN 25 and 50 / NPS 1 and 2:**
NPT, CL125 FF, CL250 RF, CL150 RF, CL300 RF, CL600 RF and PN 16/25/40 RF

**DN 80 and 100 / NPS 3 and 4:**
CL125 FF, CL250 RF, CL150 RF, CL300 RF, CL600 RF and PN 16 RF

**Backpressure Control Ranges(1)**

**Low-Pressure Actuator:**
0.34 to 0.97 bar / 5 to 14 psig; 0.55 to 1.7 bar / 8 to 24 psig; 0.83 to 2.1 bar / 12 to 30 psig; 1.0 to 2.4 bar / 15 to 35 psig

**High-Pressure Actuator:**
1.7 to 2.8 bar / 25 to 40 psig; 2.4 to 4.8 bar / 35 to 70 psig; 3.8 to 8.3 bar / 55 to 120 psig; 6.2 to 13.8 bar / 90 to 200 psig(2); 12.1 to 20.7 bar / 175 to 300 psig(3)

**Maximum Set Pressure(1)**

**Low-Pressure Actuator:** 2.4 bar / 35 psig

**High-Pressure Actuator:**
**Nitrile (NBR) and Ethylene Propylene (EPDM) Diaphragm:** 20.7 bar / 300 psig
**Fluorocarbon (FKM) Diaphragm:** 10.3 bar / 150 psig

**Temperature Capabilities(1)**

**Nitrile (NBR):** -29 to 82°C / -20 to 180°F
**Fluorocarbon (FKM):** -7 to 121°C / 20 to 250°F(4)
**Ethylene Propylene (EPDM):** -29 to 107°C / -20 to 225°F(6)

**Maximum Emergency Casing Pressures(1)(7)**

**Low-Pressure Actuator:** 4.8 bar / 70 psig
**High-Pressure Actuator:** 27.6 bar / 400 psig(5)

**Maximum Inlet Pressures(1)(7)**

**Low-Pressure Actuator:** 4.8 bar / 70 psig
**High-Pressure Actuator:** 27.6 bar / 400 psig(5)

**Maximum Outlet Pressures(1)(7)**

**Low-Pressure Actuator:** 4.8 bar / 70 psig
**High-Pressure Actuator:** 27.6 bar / 400 psig(5)

**Maximum Differential Pressures(1)**

**Low-Pressure Actuator:** 4.8 bar / 70 psig
**High-Pressure Actuator:** 27.6 bar / 400 psig or maximum inlet pressure, whichever is lower

**Maximum Pressures over Set Pressure to Avoid Internal Parts Damage(1)**

**Low-Pressure Actuator:** 1.4 bar / 20 psig
**High-Pressure Actuator:** 8.3 bar / 120 psig

## Installation

**WARNING**

**Only qualified personnel should install or service a backpressure regulator. Backpressure regulators should be installed, operated and maintained in accordance with international and applicable codes and regulations and Emerson Process Management Regulator Technologies Inc. instructions.**

**If using a backpressure regulator on a hazardous or flammable fluid service, personal injury and property damage could occur due to fire or explosion of vented fluid that may**

1. The pressure/temperature limits in this Installation Guide or any applicable limitation should not be exceeded.
2. Maximum set pressure is limited to 10.3 bar / 150 psig for constructions with Fluorocarbon (FKM) diaphragm.
3. Not applicable for constructions with Fluorocarbon (FKM) diaphragm.
4. Fluorocarbon (FKM) is limited to 93°C / 200°F hot water.
5. Maximum Inlet, Outlet and Emergency Casing Pressures for constructions with Fluorocarbon (FKM) diaphragm are limited to 15.8 bar / 230 psig or the body rating limit, whichever is lower.
6. Ethylene Propylene (EPDM) is limited to -7 to 107°C / 20 to 225°F when used with Low Pressure Actuator.
7. Pressure ratings are based on a maximum operating temperature of 121°C / 250°F.

D103247XUS2

**have accumulated. To prevent such injury or damage, provide piping or tubing to vent the fluid to a safe, well-ventilated area or containment vessel. Also, when venting a hazardous fluid, the piping or tubing should be located far enough away from any buildings or windows so to not create a further hazard and the vent opening should be protected against anything that could clog it.**

**Personal injury, equipment damage or leakage due to escaping fluid or bursting of pressure-containing parts may result if this backpressure regulator is overpressured or is installed where service conditions could exceed the limits given in the Specifications section or where conditions exceed any ratings of the adjacent piping or piping connections.**

**To avoid such injury or damage, provide pressure-relieving or pressure-limiting devices (as required by the appropriate code, regulation or standard) to prevent service conditions from exceeding limits. Additionally, physical damage to the backpressure regulator could result in personal injury and property damage due to escaping fluid. To avoid such injury and damage, install the backpressure regulator in a safe location.**

Clean out all pipelines before installation of the backpressure regulator and check to be sure the backpressure regulator has not been damaged or has collected foreign material during shipping. For NPT bodies, apply pipe compound to the external pipe threads. For flanged bodies, use suitable line gaskets and approved piping and bolting practices.

Vertical installation with the actuator oriented up or down is recommended. The unit will operate in horizontal installation with actuator on the side, however, this could result in premature wear of parts. Make sure that flow will be in the same direction as that indicated by the body arrow. Orientation of the two vents should always be down. Vents may be rotated after regulator installation so that the vent screens are down.

A control line must be installed to allow inlet pressure to register on the actuator's diaphragm. It should be installed four to eight pipe diameters upstream of the regulator and in an area of pipe that is free of turbulence.

**Note**

**It is important that the backpressure regulator be installed so that the vent hole in the spring case is unobstructed at all times. For outdoor installations, the backpressure regulator should be located away from vehicular traffic and positioned so that water, ice and other foreign materials cannot enter the spring case through the vent. Avoid placing the backpressure regulator beneath eaves or downspouts and be sure it is above the probable snow level.**

## Overpressure Protection

Maximum inlet pressures depend upon body end connections, materials and temperatures. Refer to the nameplate for the maximum inlet pressure of the valve. The valve should be inspected for damage after any overpressure condition. **Fisher® backpressure regulators are NOT ASME safety relief valves.**

## Startup

The backpressure regulator is factory set at approximately the midpoint of the spring range or the pressure requested. If a pressure setting other than specified is desired, be sure to change the pressure setting by following the Adjustment section. With proper installation completed, slowly open the upstream and downstream shutoff valves (if applicable).

## Adjustment

To change the control pressure, loosen the locknut and turn the adjusting screw clockwise to increase pressure or counterclockwise to decrease pressure. Monitor the control pressure with a test gauge during the adjustment. Tighten the locknut to maintain the desired setting.

## Taking Out of Service (Shutdown)

**WARNING**

**To avoid personal injury resulting from sudden release of pressure, isolate the backpressure regulator from all pressure before attempting disassembly.**

## Parts List

| Key | Description |
|---|---|
| 1 | Valve Body |
| 2 | Body Flange |
| 3 | Stud Bolt<br>DN 25 / NPS 1 (4 required)<br>DN 50, 80 and 100 / NPS 2, 3 and 4 (8 required) |
| 4 | Gasket |
| 9 | Valve Spring |
| 11 | Cage |
| 12 | Port Seal |
| 13 | Seat Ring |
| 14 | Piston Ring |
| 15 | Upper Seal |
| 16 | Valve Plug |
| 17 | Cage O-ring |
| 20 | Valve Plug O-ring |
| 21 | Adaptor O-ring |
| 24 | Drive Screw (6 required) |
| 25 | Flow Arrow |
| 26 | Vent (2 required/<br>1 required for Pressure-Loaded Actuator) |
| 29 | Hex Nut<br>DN 25 / NPS 1 (4 required)<br>DN 50, 80 and 100 / NPS 2, 3 and 4 (8 required) |
| 30 | Pipe Plug |
| 33 | NACE Tag (not shown) |
| 34 | Seal Wire (not shown) |
| 38 | Pipe Plug |
| 39 | Pipe Plug |
| 40 | Stem Actuator |
| 41 | Flange Nut |
| 43 | Nameplate |
| 44 | Lube Fitting |
| 45 | Wiper Ring |
| 46 | Bearing (2 required) |
| 47 | Valve Stem O-ring (2 required) |
| 48 | Jam Nut (2 required) |
| 49 | Spring Washer |
| 51 | Lower Diaphragm Head O-ring |
| 52 | Lower Spring Guide |
| 53 | Lower Diaphragm Head |
| 54 | Lower Spring Seat |
| 55 | Diaphragm Plate |
| 56 | Diaphragm |
| 57 | Cap Screw<br>Low-Pressure Actuator (16 required)<br>High-Pressure Actuator (8 required) |
| 58 | Hex Nut<br>Low-Pressure Actuator<br>Steel (16 required)<br>Stainless steel (16 required)<br>High-Pressure Actuator<br>Steel (8 required)<br>Stainless steel (16 required) |
| 60 | Bonnet O-ring |
| 61 | Bonnet |
| 62 | Lower Diaphragm Casing |
| 63 | Upper Diaphragm Casing |
| 64 | Upper Casing O-ring |
| 65 | Cap Screw (10 required) |
| 66 | Spring Case Spacer |
| 67 | Cap Screw (6 required) |
| 68 | Control Spring |

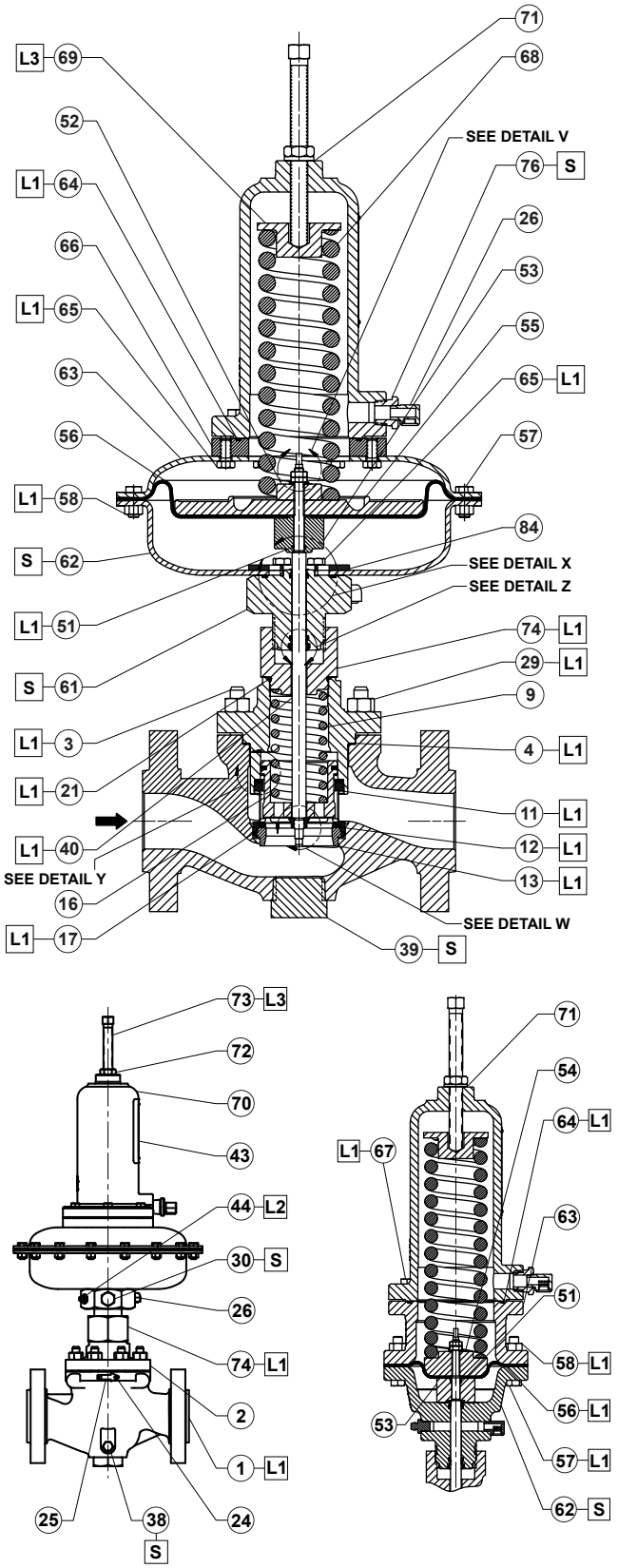


☐ **APPLY LUBRICANT OR SEALANT[1]:**
**L1 = MULTI-PURPOSE POLYTETRAFLUOROETHYLENE (PTFE) LUBRICANT**
**L3 = ANTI-SEIZE COMPOUND**
**S = MULTI-PURPOSE PTFE THREAD SEALANT**

Note: Keys 64 and 71 are used only for pressure-loaded actuators.

1. Lubricants and sealants must be selected such that they meet the temperature requirements.

***Figure 1.*** *Type MR108 Assembly Drawings*

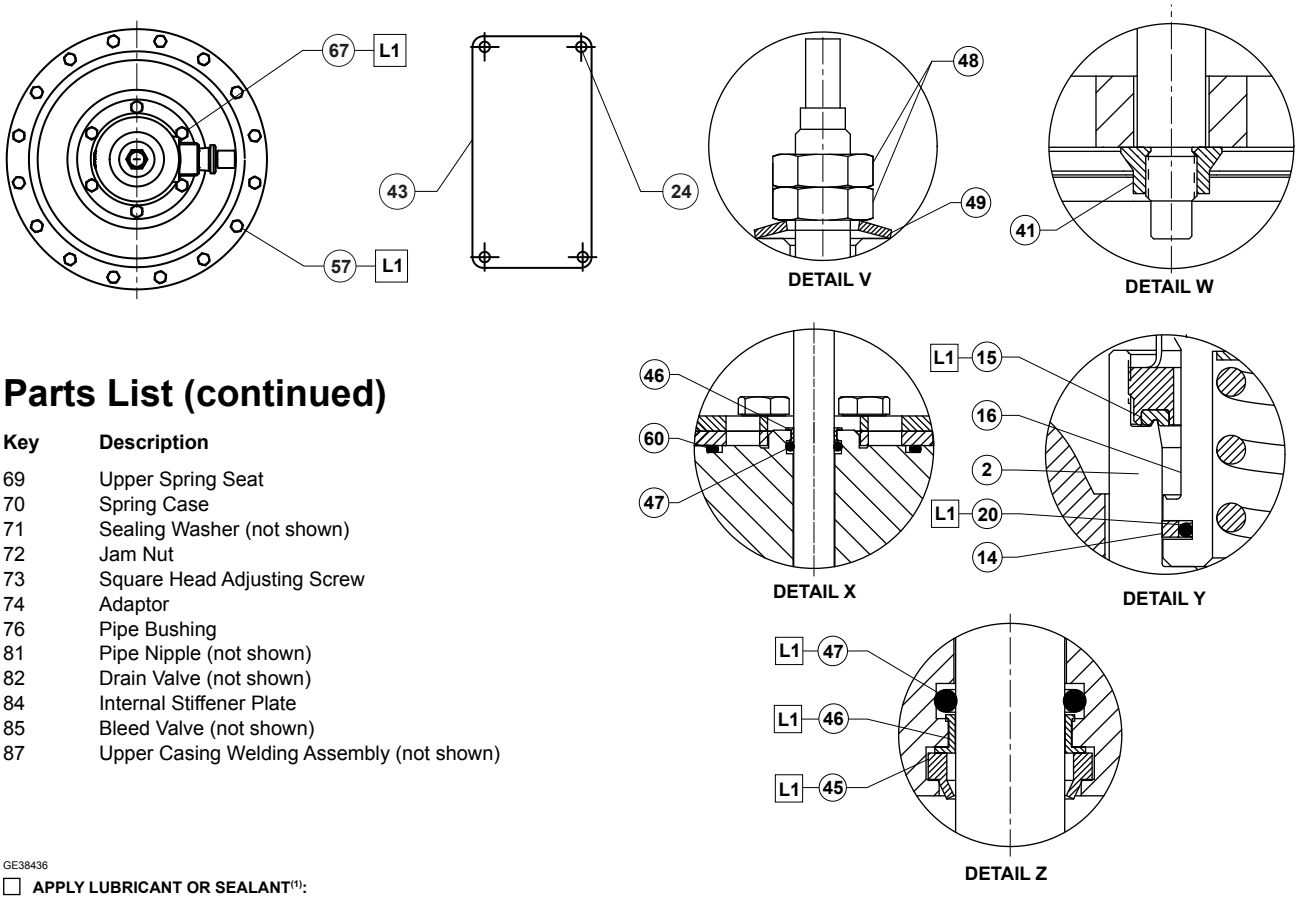


## Parts List (continued)

| Key | Description |
|---|---|
| 69 | Upper Spring Seat |
| 70 | Spring Case |
| 71 | Sealing Washer (not shown) |
| 72 | Jam Nut |
| 73 | Square Head Adjusting Screw |
| 74 | Adaptor |
| 76 | Pipe Bushing |
| 81 | Pipe Nipple (not shown) |
| 82 | Drain Valve (not shown) |
| 84 | Internal Stiffener Plate |
| 85 | Bleed Valve (not shown) |
| 87 | Upper Casing Welding Assembly (not shown) |

GE38436

☐ **APPLY LUBRICANT OR SEALANT[1]:**
**L1 = MULTI-PURPOSE PTFE LUBRICANT**

1. Lubricants and sealants must be selected such that they meet the temperature requirements.

***Figure 1.*** *Type MR108 Assembly Drawings (continued)*

**Industrial Regulators**

**Emerson Process Management**
**Regulator Technologies, Inc.**

USA - Headquarters
McKinney, Texas 75070 USA
Tel: +1 800 558 5853
Outside U.S. +1 972 548 3574

Asia-Pacific
Shanghai 201206, China
Tel: +86 21 2892 9000

Europe
Bologna 40013, Italy
Tel: +39 051 419 0611

Middle East and Africa
Dubai, United Arab Emirates
Tel: +971 4811 8100

**Natural Gas Technologies**

**Emerson Process Management**
**Regulator Technologies, Inc.**

USA - Headquarters
McKinney, Texas 75070 USA
Tel: +1 800 558 5853
Outside U.S. +1 972 548 3574

Asia-Pacific
Singapore 128461, Singapore
Tel: +65 6770 8337

Europe
Bologna 40013, Italy
Tel: +39 051 419 0611
Chartres 28008, France
Tel: +33 2 37 33 47 00

Middle East and Africa
Dubai, United Arab Emirates
Tel: +971 4811 8100

**TESCOM**

**Emerson Process Management**
**Tescom Corporation**

USA - Headquarters
Elk River, Minnesota 55330-2445, USA
Tel: +1 763 241 3238
+1 800 447 1250

Europe
Selmsdorf 23923, Germany
Tel: +49 38823 31 287

Asia-Pacific
Shanghai 201206, China
Tel: +86 21 2892 9499

For further information visit www.fisherregulators.com

The Emerson logo is a trademark and service mark of Emerson Electric Co. All other marks are the property of their prospective owners. Fisher is a mark owned by Fisher Controls International LLC, a business of Emerson Process Management.

*The contents of this publication are presented for informational purposes only, and while every effort has been made to ensure their accuracy, they are not to be construed as warranties or guarantees, express or implied, regarding the products or services described herein or their use or applicability. We reserve the right to modify or improve the designs or specifications of such products at any time without notice.*

Emerson Process Management Regulator Technologies, Inc. does not assume responsibility for the selection, use or maintenance of any product. Responsibility for proper selection, use and maintenance of any Emerson Process Management Regulator Technologies, Inc. product remains solely with the purchaser.

©Emerson Process Management Regulator Technologies, Inc., 2010, 2015; All Rights Reserved

EMERSON
Process Management