Fisher™ POSI-SEAL™ A31D Double-Flange High-Performance Butterfly Valve

Contents

Introduction 1
Scope of Manual 1
Description 2
A31D Valve Specifications and Materials of Construction 2
Educational Services 2
Installation 3
Valve Orientation 5
Before Installing the Valve 5
Adjusting the Actuator Travel Stops or Travel 7
Installing the Valve 7
Packing Adjustment and Shaft Bonding 8
Maintenance 10
Removing and Replacing the Actuator 10
Packing Maintenance 11
Removing the Valve 11
Seal Maintenance 12
PTFE Seals 12
NOVEX, Phoenix III and/or Phoenix III Fire-Tested Seals 14
Anti-Blowout Design, Packing, Valve Shaft, Disk, and Bearing Maintenance 16
Installing the Two-Piece Shaft 19
Gasket Retainer 21
Parts Ordering 22
Parts List 24

Figure 1. Fisher A31D Valve with 2052 Actuator

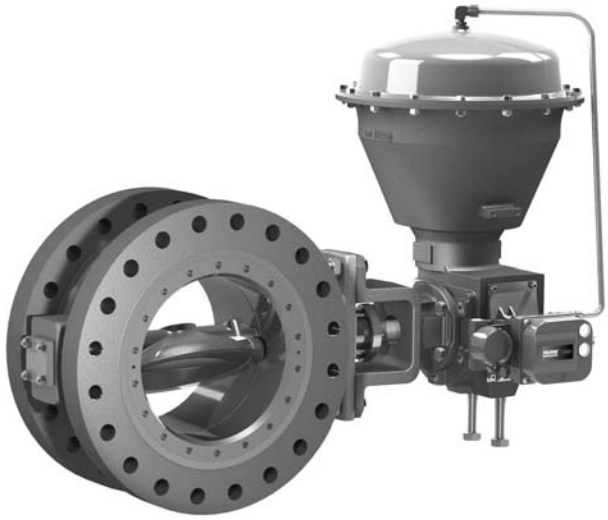

X0704

Introduction

Scope of Manual

This instruction manual includes installation, maintenance, and parts ordering information for Fisher POSI-SEAL A31D double-flange high-performance butterfly valves (see figure 1). Refer to separate instruction manuals for information covering the actuator and accessories.

Do not install, operate, or maintain an A31D valve without being fully trained and qualified in valve, actuator, and accessory installation, operation, and maintenance. **To avoid personal injury or property damage, it is important to carefully read, understand, and follow all the contents of this manual, including all safety cautions and warnings.** If you have any questions about these instructions, contact your Emerson Process Management sales office before proceeding.

A31D Valve Specifications and Materials of Construction

Table 1. Fisher A31D Valve Specifications

	SPECIFICATION
Valve Body Size	NPS 3, 4, 6, 8, 10, 12
Pressure Rating	Consistent with CL150 and 300 per ASME B16.34
Valve Body Materials	WCC Steel
	CF8M Stainless Steel
Disk Materials	CF8M Stainless Steel
End Connections	Mates with RF flanges per ASME B16.5
Valve Body Style	Double Flange
Shaft Connection	Spline (standard)
	Keyed (optional)
Face-to-Face Dimensions	CL150: ISO 5752 Butterfly Valve Short Series
	CL300: ISO 5752 Butterfly Valve Long Series
Shutoff	Soft Seal: Bidirectional ANSI/FCI 70-2 Class VI
	NOVEX Seal: Unidirectional MSS SP-61(1)
	Phoenix III Seal: ANSI/FCI 70-2 Class VI
Flow Direction	Reverse (flow direction is into the shaft side of the disk)
Flow Characteristic	Approximately Linear
Disk Rotation	Clockwise (CW) to close
1, 0.1 scfh per unit of NPS at 80 psi.	

Description

The valve is available in a double-flanged valve body design, with a variety of seals and internal components. The pressure-assisted seal provides tight shutoff against the full class pressure range for the specific type. The splined shaft combines with a variety of Fisher spring-and-diaphragm or pneumatic double-acting or spring-return piston actuators. Maximum inlet pressure/temperature ratings are consistent with ASME CL150 and CL300.

Educational Services

For information on available courses for the Fisher POSI-SEAL A31D valve, as well as a variety of other products, contact:

Emerson Process Management
Educational Services - Registration
P.O. Box 190
Marshalltown, IA 50158-2823
Phone: 800-338-8158 or 641-754-3771
FAX: 641-754-3431
e-mail: education@emerson.com

Installation

Recommended or ”preferred” installation for the A31D valve is with the flow into the shaft side of the disk (retaining ring downstream from the high pressure side of the valve).

The standard soft seal and standard Phoenix III seal offer ANSI/FCI 70-2 Class VI, bidirectional shutoff. The Phoenix III seal for fire-tested applications must be installed in the preferred direction. The Novex seal is unidirectional and should be installed in the preferred direction. See table 3.

For assistance in selecting the appropriate combination of actuator action and open valve position, consult your Emerson Process Management sales office.

⚠ WARNING

To avoid personal injury or property damage resulting from the sudden release of pressure:

- **Always wear protective gloves, clothing, and eyewear when performing any maintenance operations to avoid personal injury.**
- **Do not install the valve assembly where service conditions could exceed the limits given in this manual or on the nameplates.**
- **Use pressure-relieving devices as required by government or accepted industry codes and good engineering practices to protect from over-pressurizing the system.**
- **Check with your process or safety engineer for any additional measures that must be taken to protect against process media.**
- **If installing into an existing application, also refer to the WARNING at the beginning of the Maintenance section in this instruction manual.**

CAUTION

When ordered the valve configuration and construction materials were selected to meet particular pressure, temperature, pressure drop, and controlled fluid conditions. Responsibility for the safety of process media and compatibility of valve materials rests solely with the purchaser and end-user. Since some body/trim material combinations are limited in their pressure drop and temperature range capabilities, do not apply any other conditions to the valve without first contacting your Emerson Process Management sales office.

1. Isolate the control valve from the line pressure, release pressure from both sides of the valve body, and drain the process media from both sides of the valve. If using a power actuator, shut off all pressure lines to the power actuator, release pressure from the actuator, and disconnect the pressure lines from the actuator. Use lock-out procedures to be sure that the above measures stay in effect while you are working on the equipment.

⚠ WARNING

See the WARNING at the beginning of the Maintenance section for more information before removing the valve from the pipeline.

2. Install a three-valve bypass around the control valve assembly if continuous operation is necessary during inspection and maintenance of the valve.
3. Inspect the valve to be certain that it is free of foreign material.

CAUTION

Damage to the disk will occur if any pipe flanges or piping connected to the valve interfere with the disk rotation path. If piping flange has a smaller inner diameter than specified for schedule 80 piping, measure carefully to be certain the disk rotates without interference before placing the valve into operation.

Be certain that adjacent pipelines are free of any foreign material, such as pipe scale or welding slag, that could damage the valve sealing surfaces.

Installing Double-Flange Valves

⚠ WARNING

The edges of a rotating valve disk have a shearing effect that may result in personal injury. To avoid personal injury, keep clear of the disk edges when rotating the disk.

CAUTION

To avoid damage to the valve disk during installation, the valve must be in the fully closed position. If the A31D valve is equipped with a fail-open actuator, remove the actuator before installing the valve/actuator assembly or cycle the valve into the fully closed position. Then, take appropriate steps to ensure that the actuator does not cause the valve to open during installation.

1. See table 2 for flange bolt specifications.
2. Properly orient the valve according to the specific application. For optimum performance, install the valve so that the shaft will be on the high pressure side of the valve at shutoff.
3. Position the valve between the flanges. Be sure to leave enough room for the flange gaskets. Install the lower flange bolts.
4. Select the appropriate gaskets for the application. Flat sheet, spiral wound, or other gasket types, made to the ASME B16.5 group standard or user's standard, can be used on the valve depending on the service conditions of the application. Install the gaskets and align the valve and the gaskets.
5. Install the remaining bolts.
6. Tighten the flange bolts in an alternating criss-cross fashion to a torque value of one-forth of the final bolting torque. Repeat this procedure several times increasing the torque value each time by a forth of the final desired torque. When the final torque value has been applied, tighten each flange bolt again to allow for gasket compression.

⚠ WARNING

An A31D valve body is not grounded when installed in a pipeline. To avoid personal injury or property damage, always make sure that the valve body is grounded to the pipeline before putting the valve assembly into operation in a flammable or hazardous atmosphere. To provide shaft and disk-to-body grounding, attach a grounding strap to the shaft with a clamp and connect the other end of the grounding strap assembly to the valve body.

7. If necessary, attach a grounding strap from the valve body or pipeline to the valve shaft. For additional information on grounding procedures, contact your Emerson Process Management sales office.

Table 2. Stud Bolt and Cap Screw Chart for Double-Flange Valves

VALVE SIZE, NPS	A31D, CL150, ISO 5752 BUTTERFLY SHORT SERIES					
	3	**4**	**6**	**8**	**10**	**12**
No. of Through Holes	8	8	8	8	16	16
No. of Tapped Holes	- - -	8	8	8	8	8
Size-Dia. Inch & Thread	5/8 - 11	5/8 - 11	3/4 - 10	3/4 - 10	7/8 - 9	7/8 - 9
No. of Stud Bolts	8	8	8	8	16	16
A-Length of Stud Bolts(1), Inch	4	4-1/2	4-3/4	4-3/4	5-1/2	5-1/2
No. of Cap Screws	- - -	8	8	8	8	8
B-Length of Cap Screws(2), Inch	- - -	2-1/2	2-1/2	2-3/4	3	3
No. of Heavy Hex Nuts	16	16	16	16	32	32
VALVE SIZE, NPS	A31D, CL300, ISO 5752 BUTTERFLY LONG SERIES					
	3	4	6	8	10	12
No. of Through Holes	16	16	24	24	32	24
No. of Tapped Holes	- - -	- - -	- - -	- - -	- - -	8
Size-Dia. Inch & Thread	3/4 - 10	3/4 - 10	3/4 - 10	7/8 - 9	1 - 8	1-1/8 - 8
No. of Stud Bolts	16	16	24	24	32	24
A-Length of Stud Bolts(1), Inch	4-1/2	5	5-1/4	6	6-3/4	7-1/4
No. of Cap Screws	- - -	- - -	- - -	- - -	- - -	8
B-Length of Cap Screws(2), Inch	- - -	- - -	- - -	- - -	- - -	4-3/4
No. of Heavy Hex Nuts	32	32	48	48	64	48

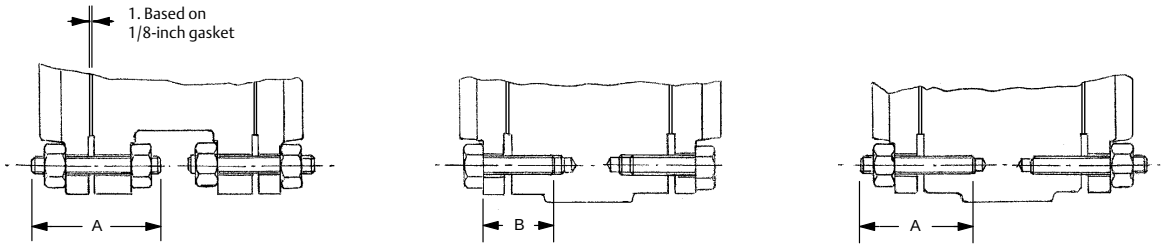

2. Optional Alternative for Cap Screws

Valve Orientation

The valve can be installed in any orientation, however, it is recommended that the valve drive shaft be horizontal and the actuator vertical.

Before Installing the Valve

⚠ WARNING

The edges of a rotating valve disk (key 2, figure 9 and 10) close with a shearing, cutting motion. To avoid personal injury, keep hands, tools, and other objects away from the disk while stroking the valve.

If the A31D valve is equipped with a fail-open actuator, cycle the valve into the fully closed position. Ensure the valve cannot open during installation by using travel stops, a manual actuator, a constant supply pressure to the pneumatic actuator, or other steps as necessary.

Figure 2. Available Seal Configurations

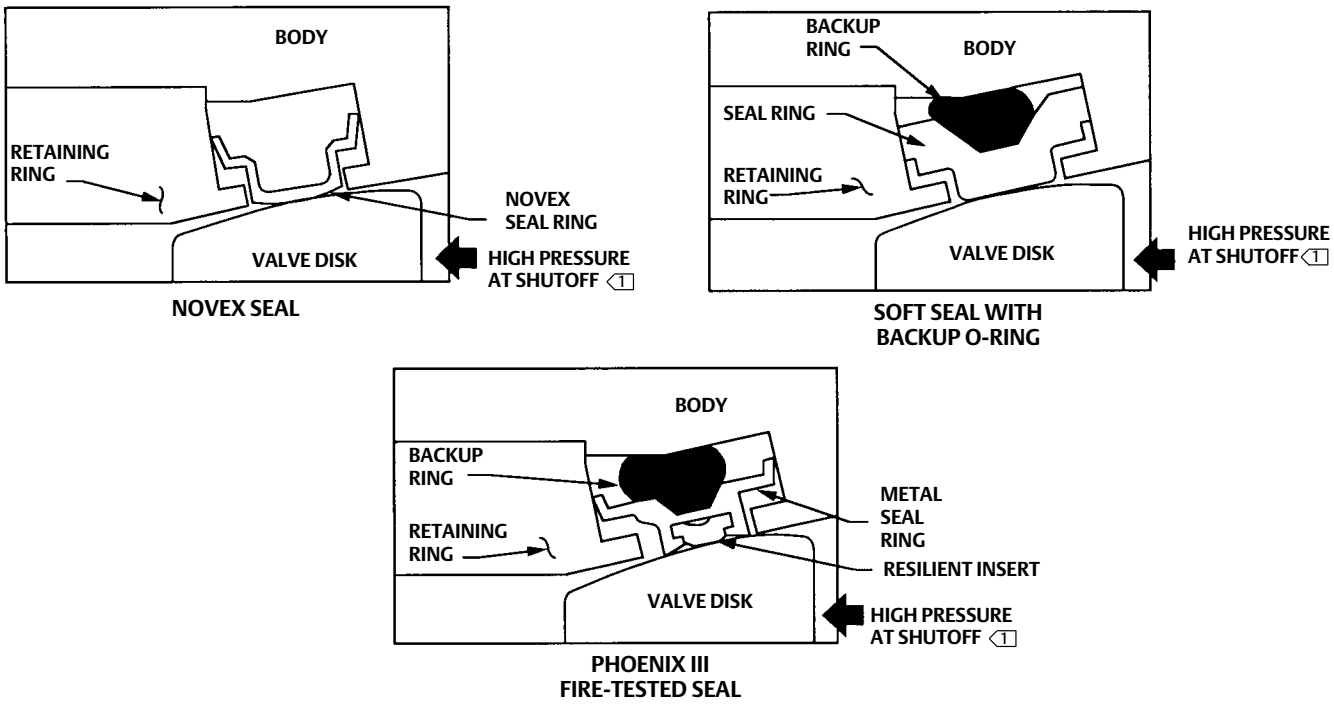

NOTE:
1 FOR OPTIMUM SEAL PERFORMANCE, THE PREFERRED VALVE ORIENTATION AT SHUTOFF IS WITH THE RETAINING RING DOWNSTREAM FROM THE HIGH PRESSURE SIDE OF THE VALVE.

Table 3. Valve Orientation for Optimal Seal Performance

SEAL TYPE	SHUTOFF DIRECTION	INSTALLED ORIENTATION
Standard soft seal	Bidirectional	Preferred
Novex seal	Unidirectional	Preferred only
Phoenix III seal	Bidirectional	Non Fire-Tested Preferred
	Unidirectional	Fire-Tested Preferred
Recommended or "preferred" installation for the A31D valve is with the flow into the shaft side of the disk (retaining ring downstream from the high pressure side of the valve).		

Table 4. Valve Weights

SIZE	CL150		CL300	
NPS	kg	lb	kg	lb
3	15	33	28	63
4	25	56	35	77
6	34	76	65	143
8	54	118	156	343
10	81	178	176	388
12	110	243	294	649

An A31D valve is normally shipped as part of an assembly with an actuator and other accessories such as a valve positioner. If the valve and actuator have been purchased separately or if the actuator has been removed for maintenance, properly mount the actuator and adjust valve/actuator travel and all travel stops before inserting the valve into the line.

CAUTION

Damage to the disk will occur if any pipe flanges or piping connected to the valve interfere with the disk rotation path. Be certain to align the valve accurately to avoid contact between the disk (key 2) and the flanges.

Adjusting the Actuator Travel Stops or Travel

Key number locations are shown in figure 9 and 10, unless otherwise noted.

1. Refer to the actuator instruction manual to locate the actuator travel stop that controls the closed position of the valve disk (key 2). When adjusting the travel stop or travel, make sure that the disk is from 0.25 to 0.76 mm (0.010 to 0.030 inch) away from the internal stop in the valve body (see figure 5). This adjustment is necessary to be certain that the actuator output torque is fully absorbed by the actuator travel stop or by the actuator. The internal travel stop in the valve body should not absorb any of the actuator torque.

CAUTION

When using an actuator, the actuator travel stop (or actuator travel, for actuators without adjustable stops) must be adjusted so the disk stop in the valve does not absorb the output of the actuator. Failure to limit the actuator travel as described in the Adjusting the Actuator Travel Stops or Travel steps can result in damage to the valve, shaft(s), or other valve components.

2. Before installing the valve/actuator assembly in the process line, cycle the valve several times to be sure the valve disk returns to the proper position.

Installing the Valve

The maximum allowable inlet pressures for A31D valves are consistent with the applicable ASME pressure/temperature ratings except where limited by the material capabilities.

Refer to table 2 for the quantity and size of line bolting required to install the valve in the pipeline.

CAUTION

To avoid damage to the valve disk during installation, the valve must be in the fully closed position. If the A31D valve is equipped with a fail-open actuator, remove the actuator before installing the valve/actuator assembly or cycle the valve into the fully closed position. Then, take appropriate steps to be sure that the actuator does not cause the valve to open during installation.

Figure 3. Properly Installed Valve

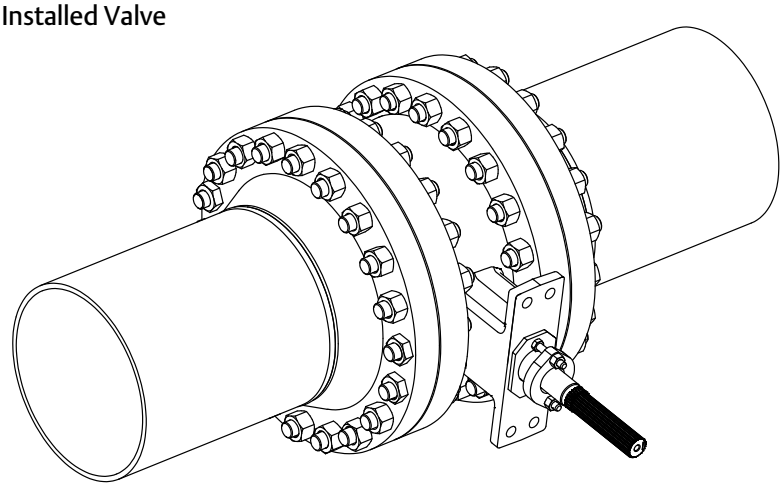

GE62595-A

1. See figure 3 for recommended valve orientation.
2. Position the valve between the flanges. Be sure to leave enough room for the flange gaskets. Install the lower flange bolts.
3. Select the appropriate gaskets for the application. Flat sheet, spiral wound, or other gasket types, made to the ASME B16.5 standard or user's standard, can be used on A31D valves depending on the service conditions of the application.
4. Install the remaining flange bolts.
5. Tighten the flange bolts in an alternating criss-cross fashion to a torque value of one-fourth of the final bolting torque. Repeat this procedure several times, increasing the torque value each time by a fourth of the final desired torque. After applying the final torque value, tighten each flange bolt again to allow for gasket compression.

Packing Adjustment and Shaft Bonding

⚠ WARNING

Personal injury could result from packing leakage. Valve packing was tightened before shipment; however, the packing might require some readjustment to meet specific service conditions. Check with your process of safety engineer for any additional measures that must be taken to protect against process media.

1. For PTFE or graphite packing: Tighten standard packing follower nuts only enough to prevent shaft leakage. Excessive tightening of packing will accelerate wear and could produce higher rotating friction loads on the valve stem. If necessary, refer to the Packing Maintenance section.

Figure 4. Optional Shaft-to-Valve Body Bonding Strap Assembly

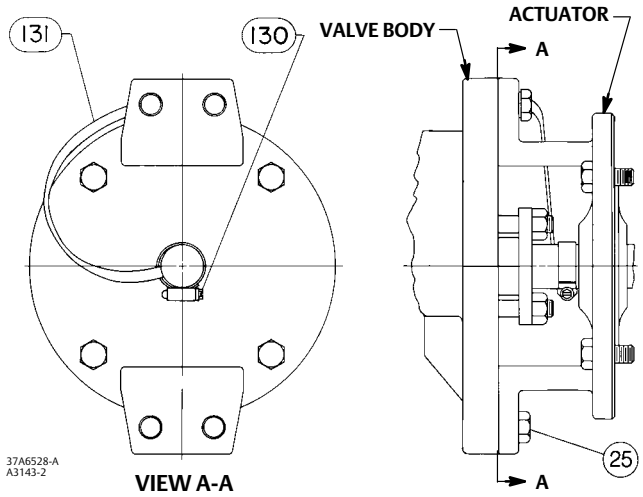

CAUTION

For non-ENVIRO-SEAL packing: Tighten the packing follower nuts only enough to prevent shaft leakage. Excessive tightening will accelerate wear of the packing and could produce higher friction loads on the valve stem.

2. ENVIRO-SEAL Packing Systems: will not require this initial re-adjustment. Refer to the separate instruction manual, Fisher ENVIRO-SEAL Packing System for Rotary Valves (D101643X012), for repair and adjustment procedures.
3. For hazardous atmosphere or oxygen service valves, read the following Warning, and provide the bonding strap assembly mentioned below if the valve is used in an explosive atmosphere.

⚠ WARNING

The valve shaft is not necessarily grounded when installed in a pipeline unless the shaft is electrically bonded to the valve.

To avoid personal injury or property damage resulting from the effects of a static electricity discharge from valve components in a hazardous atmosphere or where the process fluid is combustible, electrically bond the drive shaft (key 3) to the valve according to the following step.

Note
Standard PTFE packing is composed of a partially conductive carbon-filled PTFE female adaptor with PTFE V-ring packing. Standard graphite packing is composed of all conductive graphite ribbon packing. Alternate shaft-to-valve body bonding is available for hazardous service areas where the standard packing is not sufficient to electrically bond the shaft to the valve (see the following step).

4. Attach the bonding strap assembly (key 131, figure 4) to the shaft with the clamp (key 130, figure 4).
5. Connect the other end of the bonding strap assembly to the valve flange cap screws.
6. For more information, refer to the Packing Maintenance section below.

Maintenance

Valve parts are subject to normal wear and must be inspected and replaced as necessary. The frequency of inspection and replacement depends upon the severity of service conditions.

Key numbers in this procedure are shown in figure 9 and 10, unless otherwise indicated.

⚠ WARNING

The valve closes with a shearing action. To avoid personal injury, keep hands, tools, and other objects away from the valve while its being stroked.

Avoid personal injury from sudden release of process pressure. Before performing any maintenance operations:

- **Do not remove the actuator from the valve while the valve is still pressurized.**
- **Always wear protective gloves, clothing, and eyewear when performing any maintenance operations to avoid personal injury.**
- **Disconnect any operating lines providing air pressure, electric power, or a control signal to the actuator. Be sure the actuator cannot suddenly open or close the valve.**
- **Use bypass valves or completely shut off the process to isolate the valve from process pressure. Relieve process pressure on both sides of the valve. Drain the process media from both sides of the valve.**
- **Vent the power actuator loading pressure.**
- **Use lock-out procedures to be sure that the above measures stay in effect while you work on the equipment.**
- **The valve packing box may contain process fluids that are pressurized, *even when the valve has been removed from the pipeline.* Process fluids may spray out under pressure when removing the packing hardware or packing rings, or when loosening the packing box pipe plug.**
- **Check with your process or safety engineer for any additional measures that must be taken to protect against process media.**

Removing and Replacing the Actuator

Refer to the appropriate actuator instruction manual for actuator removal and replacement procedures. The actuator stops or travel stops must limit the rotation of the valve shaft. See the CAUTION below.

CAUTION

When using an actuator, the actuator travel stop (or actuator travel stop, for actuators without adjustable stops) must be adjusted so the disk stop in the valve does not absorb the output of the actuator. Failure to limit the actuator travel can result in damage to the valve, shaft(s), or other valve components.

Packing Maintenance

The A31D valve is designed so the packing can be replaced without removing the valve from the process pipeline.

CAUTION

For non-ENVIRO-SEAL packing: Tighten the packing follower nuts only enough to prevent shaft leakage. Excessive tightening will accelerate wear of the packing and could produce higher friction loads on the valve stem.

Usually, packing leakage can be eliminated by merely tightening the hex nuts (key 15) located above the packing follower (key 12) while the valve is in the pipeline. However, if leakage continues, the packing must be replaced.

For PTFE ENVIRO-SEAL packing system, refer to instruction manual, Fisher ENVIRO-SEAL Packing System for Rotary Valves (D101643X012) (see figure 8).

CAUTION

Never use a wrench or pliers on the drive shaft (key 3). A damaged shaft could cut the packing and allow leakage.

1. Before loosening any parts on the valve, release the pressure from the pipeline. Then, remove the hex nuts (key 15) and lift off the packing follower (key 12).
2. Remove the hex jam nuts (key 17) and the anti-blowout flange (key 10). Remove the packing follower (key 12). Refer to figure 10 for details of the anti-blowout protection parts.

The packing is now accessible.

3. Use a packing extractor to remove packing. Insert the corkscrew-like end of the tool into the first piece of packing and pull firmly to remove the packing. Repeat this process until all packing parts have been removed.

CAUTION

Be careful when cleaning the packing box. Scratches to the drive shaft (key 3) or inside diameter of the packing bore might cause leakage.

4. Before installing new packing, clean the packing box.
5. Install new packing one ring at a time, using the packing follower as a driver. If using split-ring packing, stagger the splits in the rings to avoid creating a leak path.
6. Reinstall the packing parts. Refer to figure 8 for the sequence of packing parts.

Removing the Valve

1. Disconnect any operating lines providing air pressure, electric power, or a control signal to the actuator. Be sure the actuator cannot suddenly open the valve. Vent the power actuator loading pressure.
2. Use bypass valves or completely shut off the process to isolate the valve from process pressure. Relieve process pressure on both sides of the valve. Drain the process media from either side of the valve.

CAUTION

Damage to the valve disk can occur if the disk is not closed when the valve is being removed from the pipeline. If necessary, stroke the actuator to place the disk in the closed position while removing the valve from the pipeline.

3. Loosen the flange bolting that holds the valve. Make sure the valve cannot slip or twist while loosening and removing the bolting.
4. Before removing the valve from the pipeline, make sure the valve disk is closed. Removing the valve with the disk open could cause damage to the disk, piping, or pipe flanges.
5. After removing the valve from the pipeline, move the valve to an appropriate work area. Always support the valve properly.
6. When valve maintenance is complete, refer to the Installation procedures in this manual.

Seal Maintenance

Note

For larger valves, it is possible to replace the seal (key 5) while the actuator is mounted to the valve and can be accomplished by cycling the valve to 90 degrees open.

Key numbers in this procedure are shown in figure 9 and 10, unless otherwise indicated.

1. After removing the valve from the pipeline, remove the manual or power actuator. Manually rotate the drive shaft (key 3) counterclockwise until the disk has moved a full 180 degrees away from the closed position.

⚠ WARNING

Avoid personal injury or property damage caused by the impact of a falling or tipping of a large valve. Support large valves during maintenance.

2. Lay the valve flat on a work bench in a secure position with the retaining ring (key 18) and retaining ring screws (key 19) facing up. Properly secure the valve on a suitable worktable so it cannot slip, twist, or fall during maintenance. Remove all retaining ring screws.
3. Remove the retaining ring by placing a socket head cap screw from the retaining ring into each of the two retaining ring jacking screw holes. Slowly turn the screws until the retaining ring has been lifted from the valve body. Remove the retaining ring to expose the seal in the T-slot area of the valve body.

Note

The A31D is available with different seal designs and components. See figure 2 to identify the specific seal design.

4. Insert a regular screwdriver or other similar tool under the top edge of seal and gently pry the seal out of the T-slot area in the valve body. Take care not to damage the seal or T-slot area of the valve body. After the seal has been removed, clean the T-slot area, retaining ring and, if required, polish the disk (key 2) thoroughly.

To install a new seal, O-ring (key 6), and retaining ring gasket, follow the appropriate instructions given below.

Table 5. Torque Values for Retaining Ring Screws

ASME CLASS AND VALVE SIZE, NPS	RETAINING RING SCREWS		
	Fastener Nominal Size	N • m	Lbf • in
CL150: NPS 3, 4, 8, and 10; NPS 3 and 4	#10	4.6	41
CL150: NPS 6 and 12; CL300:NPS 6, 8, 10, and 12	1/4	11	100
Note: These values are based upon standard materials, S66286/N07718 screws and ASTM A193GRB6 bolts. For other special fastener materials, please contact your Emerson Process Management sales office.			

Table 6. Torque Values for Gasket Retainer Bolts

ASME CLASS AND VALVE SIZE, NPS	GASKET RETAINER BOLTS		
	Fastener Nominal Size	N • m	Lbf • in
CL150: NPS 3 and 10; NPS 3	5/16	19	167
CL150: NPS 4, 6, 8, 12; CL300:NPS 4, 6, 8, 10, 12	3/8	33	295
Note: These values are based upon standard materials, S66286/N07718 screws and ASTM A193GRB6 bolts. For other special fastener materials, please contact your Emerson Process Management sales office.			

Figure 5. Typical Seal Installation

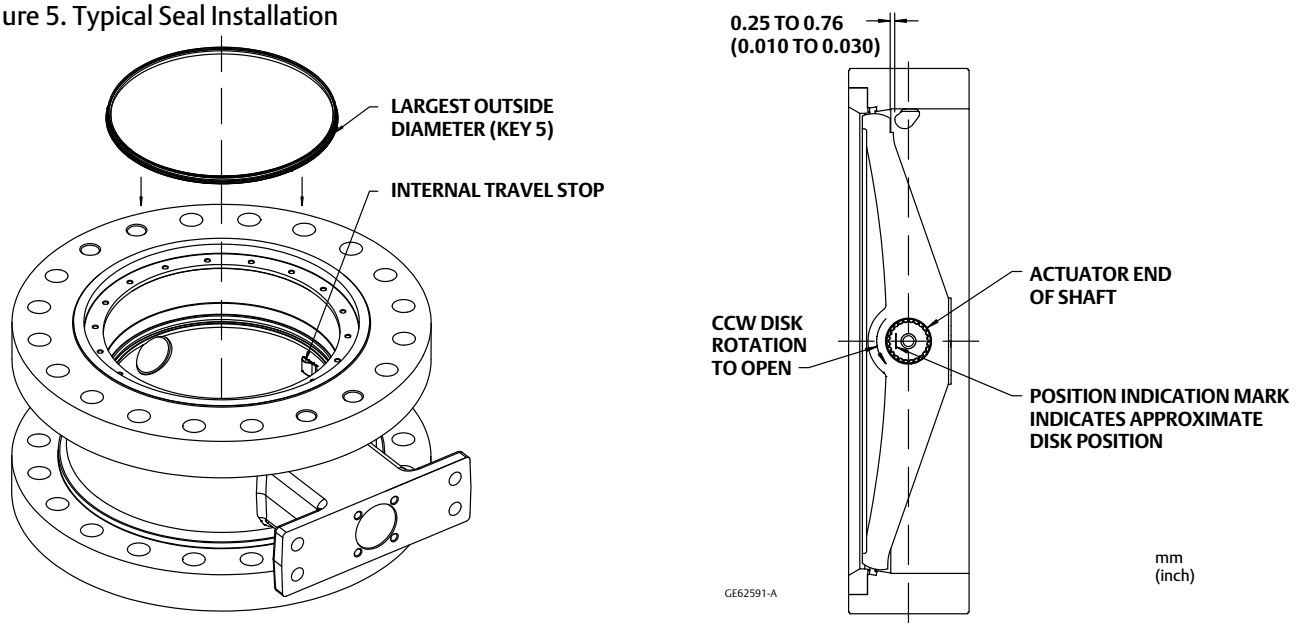

PTFE Seals

1. Locate the replacement seal ring (key 5) and note the shape of the ring. The ring is wider across one edge diameter and narrower across the other edge diameter as shown in figure 5. Around the outside circumference is one wide groove.

Before installing the seal ring into the valve body, place the O-ring (key 6) into the wide, outer groove of the seal ring. Refer to figure 5.

2. Install the seal ring and O-ring assembly in the valve body. The wider outside diameter of the seal ring, as marked in figure 5, goes into the T-slot area of the body. Start the edge with the wider diameter into the T-slot of the valve body using a blunt-end tool.
3. Carefully tuck the O-ring downward into the body T-slot until the seal ring is completely entrapped in the body T-slot, and it completely covers the backup O-ring.
4. Re-install the retaining ring and the socket head cap screws. Tighten the cap screws just enough to eliminate any movement of the retaining ring. Do not over-tighten the retaining ring screws. Using a blunt-end tool, carefully tuck the lip of the seal ring under the retaining ring.

5. When the seal is under the lip of the retaining ring, continue to tighten the cap screws according to standard procedures. Do not fully torque screws at this time. Final tightening of screws is accomplished in step 7 of this procedure.
6. Manually rotate the drive shaft clockwise 180 degrees to return the disk (key 2) to its closed position.
7. The final seating of the retaining ring cap screws can now be done. For the screw torque values, refer to table 5. The seal is now fully installed. Refer to the Installation procedures in this manual.

NOVEX, Phoenix III and/or Phoenix III Fire-Tested Seals

1. Locate the replacement seal ring (key 5) and note the shape of the ring. The ring is wider across one edge diameter and narrower across the other edge diameter as shown in figure 5. Around the outside circumference is one wide groove.

Install the seal ring (key 5) in the valve body by first placing the wider outside diameter of the seal ring into the T-slot area of the valve body which is shown in figure 2.

The backup O-ring (key 6) for the Phoenix III seal will have to be installed after placement of the seal ring in the valve body using a blunt-end tool. Do not use the seal tool directly on the metal seat. Use tools on the O-ring only.

2. With the seal ring inserted all the way around the body T-slot now lay the O-ring into the opening between the valve body and the seal ring. Use the seal tool to apply pressure to the O-ring and carefully tuck the O-ring down into the T-slot between the valve body and the seal ring.

Note

On larger valves, it may be more efficient to have someone hold down the seal ring while you push the O-ring into the T-slot.

3. Once the seal ring and backup O-ring have been fully installed into the body T-slot, the retaining ring gasket can be installed. This gasket is a thin graphite material. Punch one initial screw hole through the gasket for alignment, being careful not to cause additional damage to the gasket.

CAUTION

The retaining ring gasket is a thin graphite material. When you punch one initial screw hole through the gasket for alignment, be careful not to cause additional damage to the gasket.

4. Install the retaining ring and align the screw holes in the retaining ring with the holes in the valve body. Install the first retaining ring screw through the punched hole in the ring gasket. Install the other ring screws by pushing the screws through the graphite gasket and threading them into the valve body.
5. Tighten the retaining ring socket head cap screws just enough to eliminate any movement of the retaining ring. Do not over-tighten the retaining ring screws.

⚠ WARNING

Avoid personal injury or property damage caused by the impact of a falling or tipping of a large valve. Support large valves during maintenance.

6. To complete this step, stand the valve up. Support the valve securely using methods appropriate for the valve size. If a vise or other clamps are being used, be sure to not damage the flange gasket sealing area of the valve body.

7. Manually rotate the drive shaft (key 3) to turn the disk clockwise to meet the seal.
8. Tap the disk with a rubber mallet to drive it against the internal travel stop. When the disk makes contact with the stop, manually rotate the disk counterclockwise back out of the seal to a 90-degree open position. Repeat steps 7 and 8 three times.

Note

When attaching the actuator to the valve, make sure the valve disk is not in contact with the valve internal travel stop (see figure 5). The valve disk should be positioned from 0.25 to 0.76 mm (0.010 to 0.030 inch) away from the internal stop in the valve body (see figure 5).

9. Use an appropriate tool (such as a feeler gauge) to position the disk (key 2) from 0.25 to 0.76 mm (0.010 to 0.030 inch) away from the internal stop in the valve body.

This adjustment is necessary to be certain that the actuator output torque is fully absorbed by the actuator travel stop or by the actuator. The internal travel stop in the valve body should not absorb any of the actuator torque.

CAUTION

When using an actuator, the actuator travel stop (or actuator travel, for actuators without adjustable stops) must be adjusted so the disk stop in the valve does not absorb the output of the actuator. Failure to limit the actuator travel as described in the Adjusting the Actuator Travel Stops or Travel steps can result in damage to the valve, shaft(s), or other valve components.

10. The final seating of the retaining ring screws can now be done. For the screw torque values, refer to table 5.

Figure 6. Blowout Protection (NPS 3 through 12)

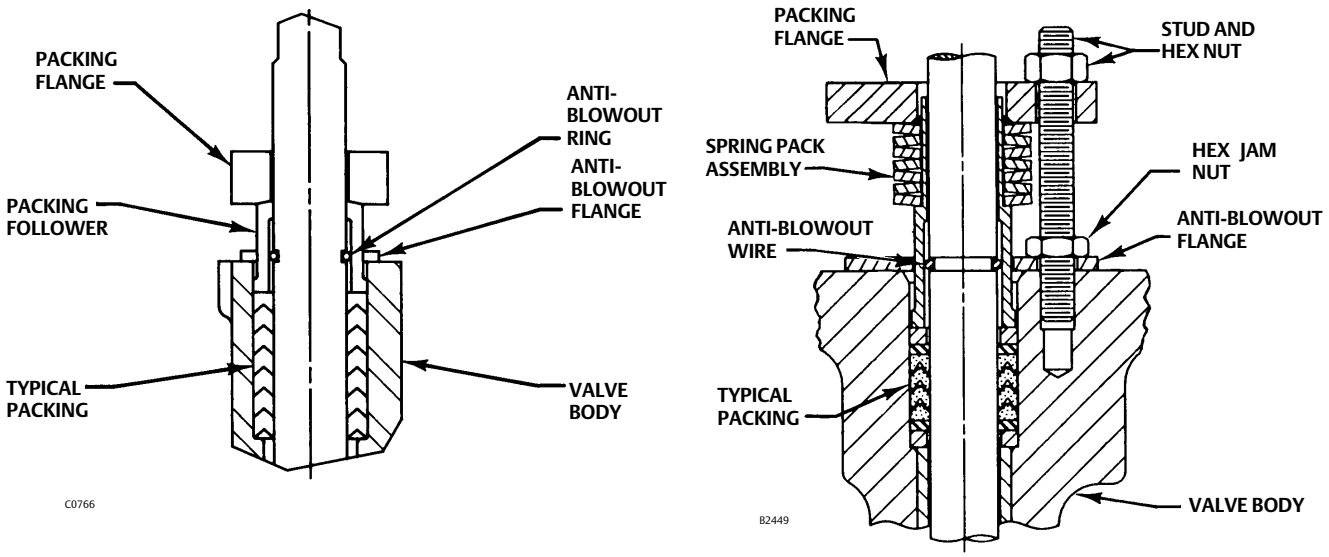

Anti-Blowout Protection, Packing, Valve Shaft(s), Disk, and Bearing Maintenance

Removal

Note

NPS 3 through 8 valves (CL150) and NPS 3 through 6 valves (CL300) have a bearing stop pressed into the bearing bore immediately after the packing box.

Do not attempt to remove the bearing stop which is found in the drive shaft bearing bore immediately after the packing box. The bearing stop is pressed into the bearing bore. If the bearing stop needs replacement, contact your Emerson Process Management sales office for more information.

Note

The A31D valve has a two-piece shaft. In these procedures, the drive shaft is key 3. The shaft opposite the drive shaft is called the follower shaft (key 4).

CAUTION

When using an actuator, the actuator travel stop (or actuator travel adjustment, for actuators without adjustable stops) must be adjusted so the disk stop in the valve does not absorb the output of the actuator. Failure to limit the actuator travel as described in the next step can result in damage to the valve, shaft(s), or other valve components.

CAUTION

When removing the actuator from the valve, do not use a hammer or similar tool to drive the lever off the valve shaft. Driving the lever or actuator off the valve shaft could damage the valve internal parts.

If necessary, use a wheel puller to remove the lever or actuator from the valve shaft. It is okay to tap the wheel puller screw lightly to loosen the lever or actuator, but hitting the screw with excessive force could also damage internal valve parts.

Key numbers in this procedure are shown in figure 9 and 10, unless otherwise indicated.

1. Remove the valve from the pipeline. Remove the actuator from the valve.

⚠ WARNING

Avoid personal injury or property damage caused by the impact of a falling or tipping of a large valve. Support large valves during maintenance.

CAUTION

Never use a wrench, pliers, or similar tool to turn the drive shaft. A damaged shaft can cut the packing and allow leakage.

Note
It is not necessary to remove the retaining ring and valve seal when removing the shaft(s) and disk.

2. Properly secure the valve on a suitable worktable so it cannot slip, twist, or fall during maintenance.
3. Removing the Anti-Blowout Design:
   a. **For PTFE or Graphite Packing:** Remove the hex nuts (key 15) and pull off the packing flange (key 11). Remove the hex jam nuts (key 17) and the anti-blowout flange (key 10). Remove the packing follower (key 12). For NPS 3 through 12, remove the anti-blowout ring (key 16), see figure 6.
   b. **For ENVIRO-SEAL Packing System:** Remove the hex nuts (key 101), the packing flange (key 102), jam nuts (key 17), anti-blowout flange (key 10), and the spring pack assembly (key 103). For NPS 3 through 12, remove the anti-blowout ring (key 16), see figures 6 and 8.
4. Remove the packing from around the drive shaft.

Note
Different valves require slightly different procedures because different valve sizes/ pressure classes have different methods of connecting the disk and shaft(s). To identify the proper procedures, refer to the list below.

- CL150, NPS 3 through 8: One-piece shaft with 1 taper key, (see figure 9).
- CL150, NPS 10 and 12: Two-piece shaft. 1 taper key in the drive shaft; 1 tangential pin in the follower shaft, (see figure 10).
- CL300, NPS 3 through 6: One-piece shaft with 1 taper key, (see figure 9).
- CL300, NPS 8 and 10: Two-piece shaft. 1 taper key in the drive shaft; 1 tangential pin in the follower shaft, (see figure 10).
- CL300, NPS 12 : Two-piece shaft with 2 tangential pins in the drive shaft; 1 in the follower shaft, (see figure 10).

5. Proceed as appropriate, using the following instructions.

For valves with taper key, locate the taper key (key 9, figure 7) which runs through the drive shaft boss on the back of the valve disk. Using a pin punch on the smaller end of the key, drive it out of the disk and shaft. Driving a taper key in the wrong direction will tighten it.

Note
Certain valve sizes may have a taper key that is arc spot welded in place. To remove the key, use a punch on the smaller end of the taper key and drive it out of the disk and shaft, breaking the weld.

For valves with tangential pins, locate the tangential pins (key 25) in the drive shaft (key 3) and the tangential pin (key 25) in the follower shaft (key 4).

a. Use a threaded rod with an appropriate spacer and nut as an extractor tool to remove the tangential pins. If using a threaded rod, choose a rod with threads that fit the inside thread of the pins. The rod should extend several inches above the disk when it is screwed into a pin.

b. After screwing the rod into the pin, slide the spacer over the rod and pin. Thread the nut onto the rod and tighten it. As the nut is tightened, the nut will drive the spacer against the disk. The increasing force will draw the pin from the disk.

1. Valves with a two-piece shaft have a gasket retainer and gasket (keys 20 and 21) on the follower shaft side of the valve. Remove the hex head bolts and lockwashers (keys 23 and 22) from the gasket retainer and remove the gasket retainer and gasket to expose the end of the follower shaft.
2. Support the valve disk properly, and remove the follower shaft. Pull the follower shaft from the valve body. Use a shaft extractor screwed into the puller hole in the end of the follower shaft.
3. Support the valve disk properly, and remove the drive shaft. Pull out the drive shaft (key 3) by hand-pulling or by using a shaft extractor screwed into the end of the shaft.

CAUTION

To avoid damage to the disk, seal ring, and T-slot area, do not force the disk past the seal or T-slot area. Remove the disk from the opposite side of the valve body.

4. After removing the shaft(s), remove the disk and the thrust bearings. Do not force the disk past the seal ring or T-slot area.
5. Remove the journal bearings (key 7). Using a suitable punch or puller, drive or pull the journal bearing(s) into the valve body bore from the drive shaft bearing bore. Do not attempt to remove the bearing stop (key 8). Remove the journal bearing from the follower shaft bearing bore.
6. Inspect the valve body bore, bearings, bearing bores, and packing box for damage.

Installing a One-Piece Shaft

Unless otherwise indicated, key numbers and part names are listed in figure 7.

1. Secure the valve in an upright position. Allow for easy access to the valve body bore. Allow for easy access to the drive shaft bearing bore.
2. Inspect all parts removed from the valve for wear or damage. Replace any worn or damaged parts. Clean the valve body and all parts to be installed with an appropriate solvent or degreaser.

CAUTION

Premature valve failure and loss of process control may result if bearings are improperly installed or are damaged during installation.

3. Using caution to prevent damage to the bearing, insert one journal bearing (key 7) from the valve body bore into the drive shaft bearing bore until it hits the bearing stop (key 8). When properly installed, a portion of the journal bearing will extend into the valve body bore.
4. Insert one journal bearing from the valve body bore into the shaft bearing bore opposite the journal bearing installed in step 3. When correctly installed, this journal bearing will be flush with the valve body bore.
5. Install the valve disk by placing the disk into the valve body bore so the curved side of the disk passes through the end of the valve body that does not contain the T-slot. Align the shaft bore in the disk with the bearing bores.
6. Insert the drive shaft end opposite the splined end into the valve body through the packing box. Push the shaft through the bearing stop. Taking care not to dislodge the journal bearing, push the shaft through the journal bearing and the valve disk and into the bore on the opposite side of the valve body.

CAUTION

To avoid damage to the taper key, tangential pins, valve disk, or shaft(s) resulting from the application of excessive force, use appropriate care when driving the key or pins into the disk hub and shaft(s). Use the right tool. Do not use excessive force.

7. Be sure the taper key disk shaft joint is free of oil or grease. If necessary, remove any excess welding material from the taper key.
8. Align the taper key hole in the shaft with the holes in the shaft boss on the disk. Insert the taper key. Use a flat-end punch to drive the taper key until solid contact is felt. Measure the depth of the taper key head for a reference during the following steps.

   a. Drive the taper key in farther as follows:

VALVE SIZE, NPS	MINIMUM DEPTH TO DRIVE TAPER KEY AFTER INITIAL SOLID CONTACT
CL150 and 300, NPS 3, 4, 6 valves, & NPS 8 CL150 valves	5 mm (0.188 INCHES)

   b. The disk shaft, and taper key assembly must be inspected to verify that the taper key spans the entire shaft flat width. If so, this procedure is complete. If not, the taper key must be driven in farther until this condition is satisfied. However, do not exceed the following depth limits:

VALVE SIZE, NPS	MAXIMUM ALLOWABLE DEPTH TO DRIVE TAPER KEY AFTER INITIAL SOLID CONTACT
NPS 3 and 4 CL150/300	7 mm (0.281 INCHES)
NPS 6 CL300, and NPS 8 CL150	8 mm (0.312 INCHES)

9. After driving the taper key in place, arc spot weld the head of the taper key to the disk as shown in figure 7. For NPS 3, 4, and 6 valves, use an arc spot weld bead of 1/8-inch diameter. For NPS 8, 10, and 12 valves, use an arc spot weld bead of 3/16-inch diameter.
10. Install the packing as described in the Packing Replacement section or in the ENVIRO-SEAL Rotary Packing Instruction Manual (D101643X012).

Figure 7. Fisher A31D Taper Key Weld Location

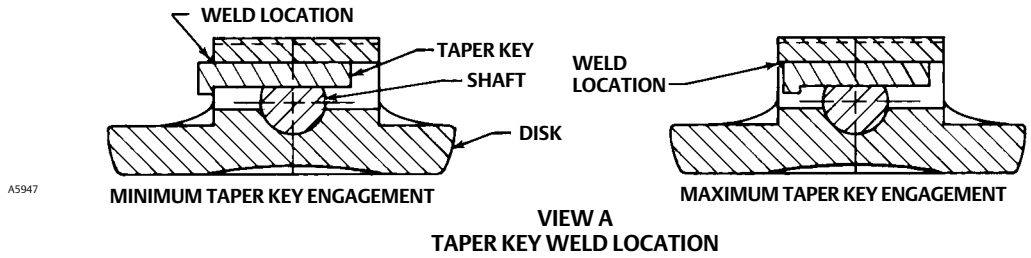

Installing the Two-Piece Shaft

Note

In these instructions, the drive shaft (with splined or keyed end) is key 3. The shaft opposite the drive shaft is called the follower shaft (key 4).

Key numbers in this procedure are shown in figure 9 and 10, unless otherwise indicated.

1. Properly secure the valve on a suitable worktable so it cannot slip, twist, or fall during maintenance. Be prepared to support the valve disk. Allow for easy access to the valve body bore, drive shaft bearing bore and follower shaft bearing bore.

⚠ WARNING

Avoid personal injury or property damage caused by the impact of a falling or tipping of a large valve. Support large valves during maintenance.

Note

Replacement disk and shafts are provided as a matched set and both should be replaced at the same time.

2. Inspect all parts removed from the valve for wear or damage. Replace any worn or damaged parts. Clean the valve body and all parts to be installed with an appropriate solvent or degreaser. Note: When installing the bearings, apply lubricant to the outside diameter of the bearing for ease of installation.

CAUTION

Premature valve failure and loss of process control may result if bearings are improperly installed or are damaged during installation.

3. When installing the lower bearings (key 4), insert one or more bearings into the follower shaft bearing bore so it is flush with the body bore.

The number of bearings required changes with valve size and construction. Two bearings are required in the drive shaft and two bearings in the follower shaft.

4. Hold the follower shaft thrust bearing (key 24) in the valve body bore against the counterbore of the follower shaft bearing bore. Push the follower shaft into the bearing bore just enough to hold the thrust bearing.
5. When installing the upper bearing (key 7), insert one or more bearings into the drive shaft from the body bore into the bearing bore below the packing box. Use caution to prevent damage to the bearing.

CAUTION

Use caution to prevent damage to the bearing when installing the upper bearing in the previous step.

6. Hold the drive shaft thrust bearing (key 24) in the valve body bore against the counterbore of the drive shaft bearing bore. Push the drive shaft through the packing box side into the bearing bore just enough to hold the thrust bearing.

CAUTION

To avoid damage to the disk, seal, and T-slot area, do not force the disk past the seal or T-slot area. Install the disk from the opposite side of the valve body.

7. Place the flat side of the disk on a flat surface and insert wooden blocks to raise the disk approximately 50.8 mm (2 inches) from the worktable surface. Then, suspend the valve body over the disk so the seal/T-slot area is facing up. Align the shaft bores through the disk with the drive shaft and follower shaft bores. Lower the valve body over the disk using caution not to dislodge or damage the thrust bearings placed on the ends of the shafts.

8. With the disk (key 2) properly positioned in the valve body (key 1), push the drive shaft and follower shaft the rest of the way through the thrust bearings and into the shaft bores in the valve disk.
9. Align the holes in the shafts with the holes in the disk.

CAUTION

To avoid damage to the taper key, tangential pins, valve disk, or shaft(s) resulting from the application of excessive force, use appropriate care when driving the key or pins into the disk hub and shaft(s). Use the correct tool, and do not use excessive force.

10. Before installing the taper key, be sure the taper key disk shaft joint is free of oil or grease. If necessary, remove any excess welding material from the taper key.
11. Install the appropriate taper key and tangential pins.
12. Install the taper key by aligning the taper key hole in the shaft with the holes in the shaft boss on the disk. Insert the taper key. Use a pin punch to drive the taper key until solid contact is felt. Measure the depth of the taper key head for a reference during the following steps.
    a. Drive the taper key in farther as follows:

VALVE SIZE, NPS	MINIMUM DEPTH TO DRIVE TAPER KEY AFTER INITIAL SOLID CONTACT
NPS 8 CL300, NPS 10 and 12 CL150, & NPS 10 CL300 valves	6 mm (0.219 INCHES)

    b. The disk shaft, and taper key assembly must be inspected to verify that the taper key spans the entire shaft flat width. If so, this procedure is complete. If not, the taper key must be driven in farther until this condition is satisfied. However, do not exceed the following depth limits:

VALVE SIZE, NPS	MAXIMUM ALLOWABLE DEPTH TO DRIVE TAPER KEY AFTER INITIAL SOLID CONTACT
NPS 8 CL300, and NPS 10 and 12 CL150	10 mm (0.375 INCHES)
NPS 10 CL300	11 mm (0.406 INCHES)

13. After driving the taper key in place, arc spot weld the head of the taper key to the disk as shown in figure 7. For NPS 10 and 12 valves, use an arc spot weld bead of 3/16-inch in diameter.
14. Refer to Packing Maintenance and the Anti-Blowout Design procedures in this manual to re-install the packing and anti-blowout design.

Gasket Retainer

Valves with a two-piece shaft use a gasket retainer and gasket (keys 20 and 21) to cover the follower shaft opening in the valve body. The gasket is held in place by the gasket retainer and four hex head bolts and lockwashers (keys 23 and 22). When reassembling the valve, use a new gasket.

Be sure to center the gasket over the follower shaft bore before retightening bolts. Tighten down bolts evenly in a crossover or star pattern.

Refer to table 6.

Installing the Gasket Retainer

All A31D valves use a gasket retainer and gasket to cover the follower shaft opening in the valve body.

1. Replace the gasket (key 21) and gasket retainer (key 20) over the end of the follower shaft. Use a new gasket.

2. Replace the four hex head bolts (key 23) and lockwashers (key 22) to hold the gasket retainer in place.
3. Be sure to center the gasket over the follower shaft bore before retightening the bolts. Tighten down the bolts evenly in a crossover or star pattern. Refer to table 6 for proper torque values.

Parts Ordering

When replacement parts are required, always use genuine Fisher parts.

Typical parts are shown in figure 9 and 10.

When corresponding with your Emerson Process Management sales office about an A31D valve, please identify the valve as an A31D and provide the valve serial number. For valve/actuator combinations assembled at the factory, the valve serial number is stamped on the nameplate attached to the actuator.

⚠ WARNING

Use only genuine Fisher replacement parts. Components that are not supplied by Emerson Process Management should not, under any circumstances, be used in any Fisher valve, because they may void your warranty, might adversely affect the performance of the valve, and could cause personal injury and property damage.

Retrofit Kits

Retrofit kits include all parts required for installation of the ENVIRO-SEAL packing system into existing high-performance butterfly valves. Retrofit kits are available for single PTFE packing. See table 7 for retrofit kit included parts.

Note

Key 103, the spring pack assembly, is made up of the packing spring stack held in place by an O-ring on the packing follower.

See table 8 for retrofit kit part numbers.

Table 7. Retrofit Kit Included Parts

Key	Description	Quantity
10	Anti-blowout follower	1
17	Jam nut	1
100	Packing stud	2
101	Packing nut	2
102	Packing flange	1
103	Spring pack assembly	1
105	Packing Set	1
106	Anti-extrusion washer	2(1)
107	Packing box ring	2
111	Tag	1
112	Cable	1

1. Not included in graphite packing kit.

Repair Kits

PTFE Repair kits include a single PTFE packing set and anti-extrusion washers. Graphite packing sets include graphite packing rings and carbon anti-extrusion rings. See table 8 for PTFE repair kit part numbers.

Table 8. Retrofit and Repair Kit Part Numbers

VALVE SIZE, NPS	PRESSURE RATING	SHAFT DIAMETER(1), mm (Inch)	RETROFIT KITS	REPAIR KITS
			PTFE	PTFE
3	CL150	14.3 (9/16)	- - -	RRTYX000112
	CL300	14.3 (9/16)	- - -	RRTYX000112
4	CL150	17.5 (11/16)	RRTYXRT0212	RRTYX000122
	CL300	17.5 (11/16)	RRTYXRT0212	RRTYX000122
6	CL150	23.8 (15/16)	RRTYXRT0222	RRTYX000132
	CL300	23.8 (15/16)	RRTYXRT0222	RRTYX000132
8	CL150	23.8 (15/16)	RRTYXRT0232	RRTYX000132
	CL300	31.8 (1-1/4)	RRTYXRT0242	RRTYX000142
10	CL150	28.6 (1-1/8)	RRTYXRT0252	RRTYX000092
	CL300	41.3 (1-5/8)	(2)	RRTYX000152
12	CL150	31.8 (1-1/4)	RRTYXRT0262	RRTYX000142
	CL300	47.6 (1-7/8)	(2)	RRTYX000162

1. Shaft diameter: Diameter through the packing box.
2. Contact your Emerson Process Management sales office.

Parts List

Note
Contact your Emerson Process Management sales office for Part Ordering information.

Key	Description
1	Valve Body If you need a valve body as a replacement part, order the valve size, ASME rating and desired material. Contact your Emerson Process Management sales office.
2	Disk
3	Drive Shaft
4	Follower Shaft
5*	Seal Ring (See following table)
6*	Backup Ring (See following table)
7*	Bearing (See following table)
8	Bearing Stop
9*	Taper Key NPS 3 NPS 4 NPS 6 NPS 8 NPS 10 NPS 12 CL300 NPS 3 NPS 4 NPS 6 NPS 8 NPS 10
10	Anti-Blowout Flange
11	Packing Flange
12	Packing Follower
13*	Packing Set PTFE, V-Ring CL150 NPS 3 NPS 4 NPS 6 NPS 8 NPS 10 NPS 12 CL300 NPS 3 NPS 4 NPS 6 NPS 8 NPS 10 NPS 12

Key	Description
	Graphite CL150 NPS 3 NPS 4 NPS 6 NPS 8 NPS 10 NPS 12 CL300 NPS 3 NPS 4 NPS 6 NPS 8 NPS 10 NPS 12
14	Stud (2 req'd)
15	Hex nut (2 req'd)
16	Anti-blowout ring
17	Hex Jam Nut (2 req'd)
18	Retaining Ring
19	Retaining Ring Screw
20	Gasket Retainer
21*	Gasket (See following table)
22	Lockwasher (4 req'd)
23	Cap Screw (4 req'd)
24*	Thrust Bearing (See following table)
25	Tangential Pin
26*	Retaining Ring Gasket NOVEX and Phoenix III Seal CL150 NPS 3 NPS 4 NPS 6 NPS 8 NPS 10 NPS 12 CL300 NPS 3 NPS 4 NPS 6 NPS 8 NPS 10 NPS 12

*Recommended spare parts

Key	Description
27	Cap Screw - Actuator (4 req'd) (not shown)
28	Hex Nut - Actuator (4 req'd) (not shown)
29	Nameplate (not shown)
30	Drive Screw (2 req'd) (not shown)
31	Key
33	Flow Direction Arrow (not shown)
34	Packing Box Ring
35	Disk/Shaft/Pin Assembly (not shown)

ENVIRO-SEAL Packing System (See figure 8)

Key	Description
10	Anti-Blow Flange
17	Hex Jam Nut (4 req'd)
100	Packing Flange Stud (4 req'd)
101	Packing Flange Nut (4 req'd)
102	Packing Flange, SST
103	Spring Pack Assembly
105*	Packing Set
	Use with PTFE packing
	CL150
	NPS 3
	NPS 4
	NPS 6
	NPS 8
	NPS 10
	NPS 12
	CL300
	NPS 3
	NPS 4
	NPS 6
	NPS 8
	NPS 10
	NPS 12
	Use with Graphite packing
	CL150
	NPS 3
	NPS 4
	NPS 6
	NPS 8
	NPS 10
	NPS 12
	CL300
	NPS 3
	NPS 4
	NPS 6
	NPS 8
	NPS 10
	NPS 12
106*	Anti-Extrusion Ring, Composition/graphite filled PEEK (2 req'd)
	Single PTFE packing w/std packing box
	CL150
	NPS 3
	NPS 4
	NPS 6
	NPS 8
	NPS 10
	CL300
	NPS 3
	NPS 4
	NPS 6
	NPS 8
	NPS 10
	NPS 12
111	Tag (not shown)
112	Cable Tie (not shown)
113	Lubricant

*Recommended spare parts

Figure 8. ENVIRO-SEAL Packing Systems

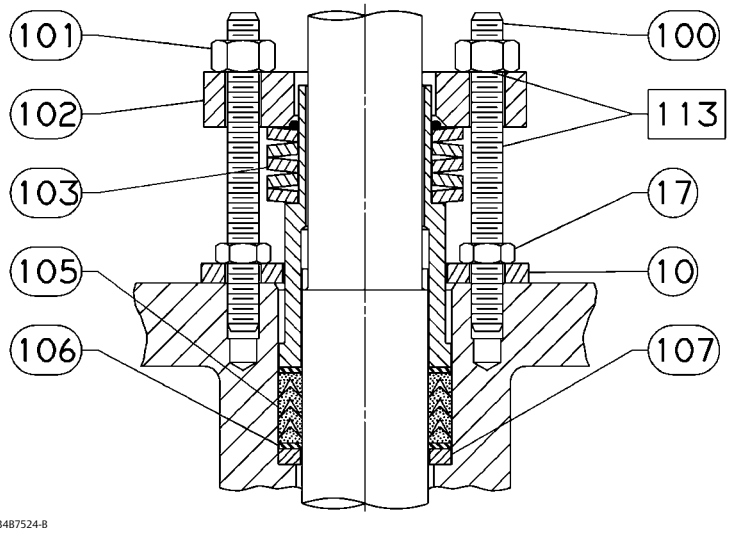

PTFE PACKING SYSTEM

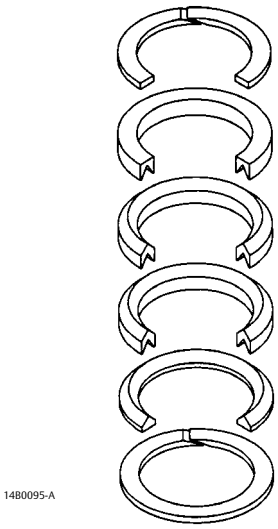

STACKING ORDER OF PTFE PACKING RINGS

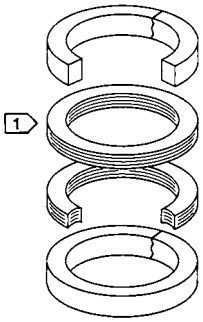

STACKING ORDER OF GRAPHITE PACKING RINGS

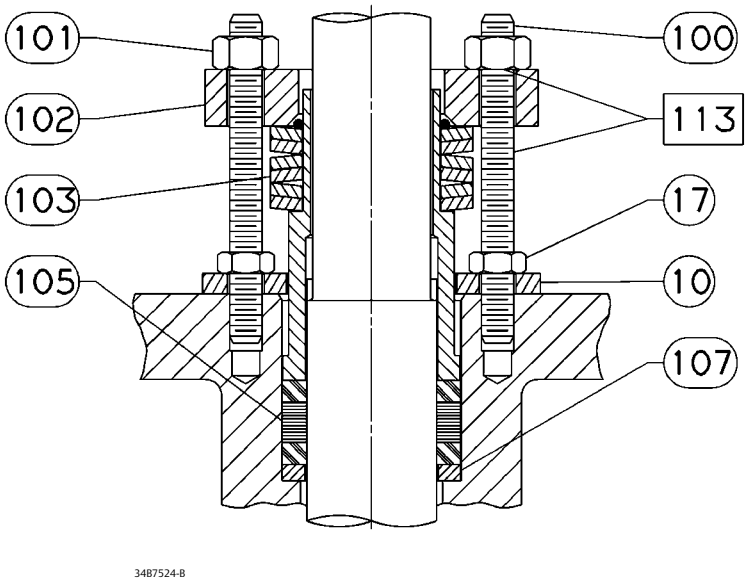

GRAPHITE PACKING SYSTEM

NOTE:
1 VALVES WITH SHAFTS LARGER THAN 38.1 mm (1-1/2 INCH) USE GRAPHITE RINGS

Figure 9. Fisher A31D Valve Body Assembly, NPS 3-8 CL150 and NPS 3-6 CL300

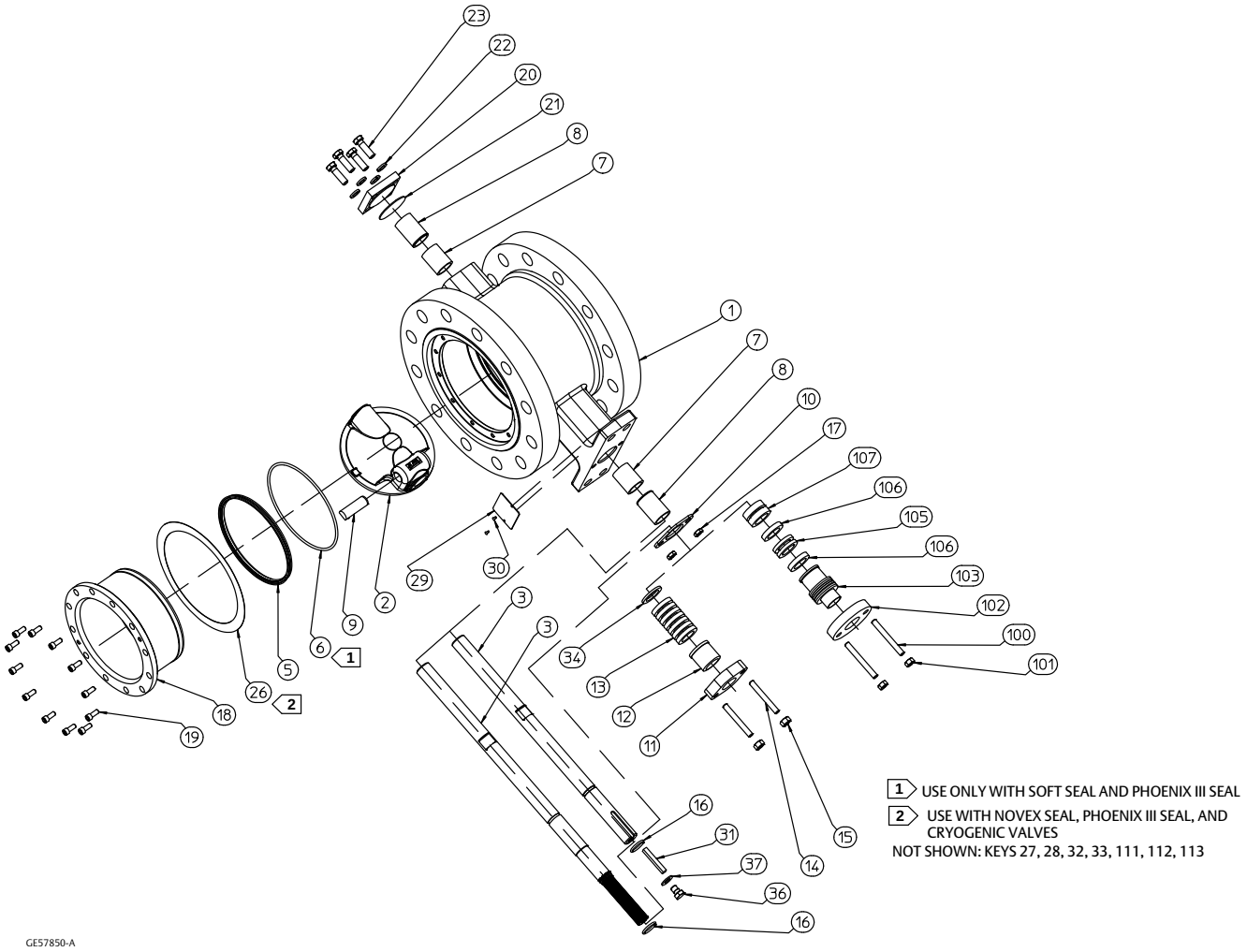

Figure 10. Fisher A31D Valve Body Assembly, NPS 10-12 CL150 and NPS 8-12 CL300

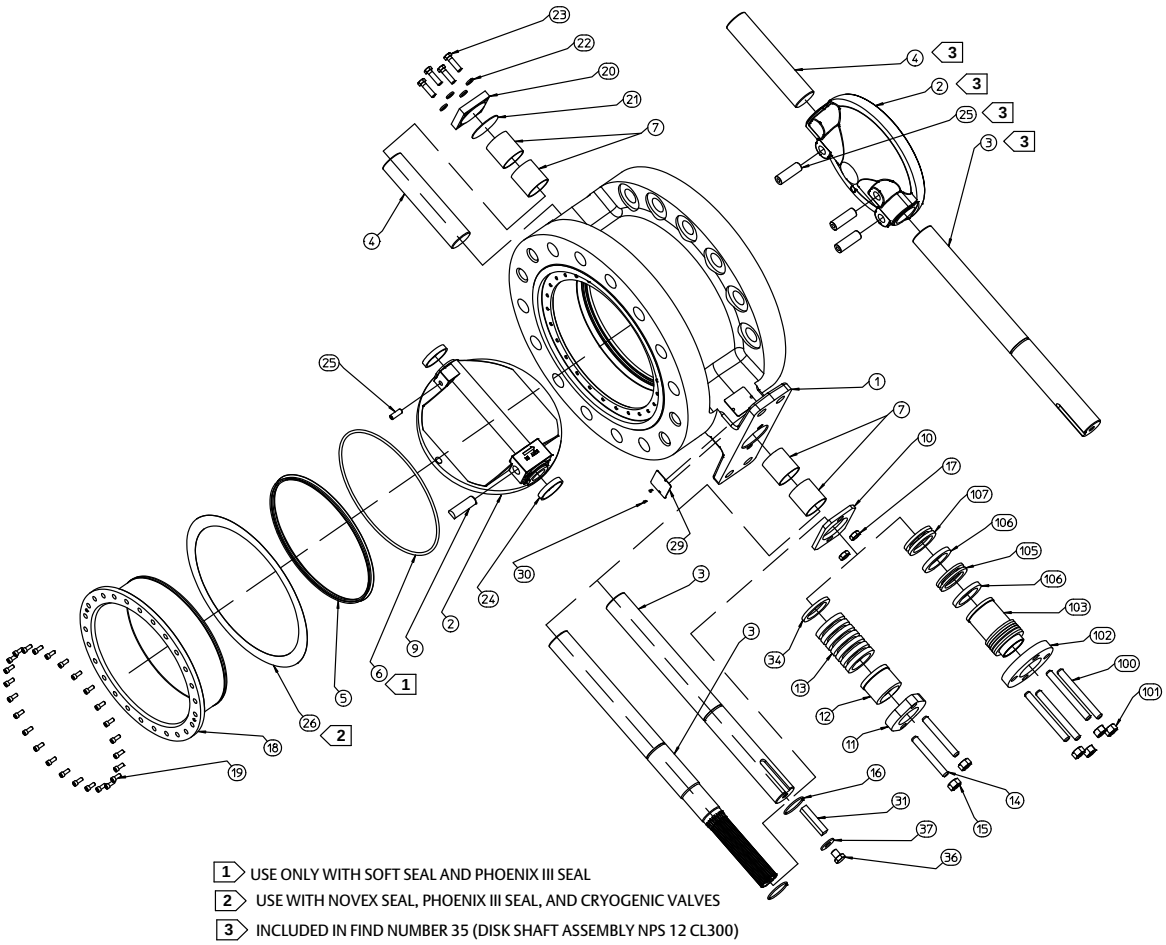

NOT SHOWN: KEYS 27, 28, 32, 33, 111, 112, 113

Neither Emerson, Emerson Process Management, nor any of their affiliated entities assumes responsibility for the selection, use or maintenance of any product. Responsibility for proper selection, use, and maintenance of any product remains solely with the purchaser and end user.

Fisher, POSI-SEAL, and ENVIRO-SEAL are marks owned by one of the companies in the Emerson Process Management business unit of Emerson Electric Co. Emerson Process Management, Emerson, and the Emerson logo are trademarks and service marks of Emerson Electric Co. All other marks are the property of their respective owners.

The contents of this publication are presented for informational purposes only, and while every effort has been made to ensure their accuracy, they are not to be construed as warranties or guarantees, express or implied, regarding the products or services described herein or their use or applicability. All sales are governed by our terms and conditions, which are available upon request. We reserve the right to modify or improve the designs or specifications of such products at any time without notice.

Emerson Process Management
Marshalltown, Iowa 50158 USA
Sorocaba, 18087 Brazil
Cernay, 68700 France
Dubai, United Arab Emirates
Singapore 128461 Singapore

www.Fisher.com

© 2013, 2016 Fisher Controls International LLC. All rights reserved.