Graphite Ribbon/Filament Packing for Fisher® Sliding-Stem Valves

Contents

Introduction 1
Scope of Manual 1
Description 1
Storage and Startup 2
Packing Installation 2
Parts Ordering 7

Introduction

Scope of Manual

This manual provides instructions for installing graphite ribbon and filament packing in sliding-stem valves--either as part of the field maintenance procedure for valves that originally were equipped with this kind of packing or when field-replacing other kinds of packing.

Use this manual along with the appropriate valve body instruction manual. Refer to the valve body manual for disassembly, packing removal, reassembly after the packing has been installed, and for packing part numbers and kits.

Do not install, operate, or maintain this packing without being fully trained and qualified in valve, actuator, and accessory installation, operation, and maintenance. To avoid personal injury or property damage, it is important to carefully read, understand, and follow all the contents of this manual, including all safety cautions and warnings. If you have any questions about these instructions, contact your Emerson Process Management sales office before proceeding.

Description

Graphite ribbon/filament packing is a low-chloride, corrosion-resistant packing for use with hard-to-handle fluids, especially high-temperature steam or water. It can be used in temperatures from -18 to 538°C (0 to 1000°F) in non-oxidizing service or from -18 to 371°C (0 to 700°F) in oxidizing service. Because the packing rings are certified to contain no more than 100 ppm of chloride, this packing is also frequently used in radioactive nuclear service and will withstand a gamma radiation dosage to 1.0×10^7 Rads or 50 R/hour.

Graphite ribbon/filament packing comes in three different arrangements of graphite ribbon rings, graphite filament rings, and sacrificial zinc washers. The three different arrangements are single (figures 1 and 2), double (figure 3), and leak-off (figure 4).

The graphite ribbon rings are made from a long ribbon of flexible graphite which is wound into a ring and then pressed tightly together. The flexible graphite contains a non-metallic, inorganic, passivating inhibitor for corrosion and oxidation resistance. Graphite filament rings consist of filaments of graphite braided together. One sacrificial zinc washer is used under each graphite ring to protect the valve from pitting and corrosion attack.

Storage and Startup

If a valve will be stored for a long period of time, remove the packing rings from the packing box to prevent corrosion. When ordering a valve that will be stored, notify Emerson Process Management and the valve will be shipped from the factory with the packing box empty and a special packing follower with O-ring gland seal installed between the packing flange and bonnet shoulder. All the other packing parts shown in figure 2, 3, or 4 will be shipped with the control valve assembly but in a separate bag or wrapper.

Leave the special packing follower in place until after any hydrostatic testing is completed. Then remove the follower, thoroughly air-dry the packing box, and install all the packing parts according to the appropriate arrangement drawing. The special packing follower can be saved for future hydrostatic testing, or discarded if it will no longer be used.

⚠ WARNING

Personal injury could result from packing leakage. Valve packing was tightened prior to shipment; however some readjustment will be required to meet specific service conditions.

CAUTION

When using any packing at low temperatures, frost must not be allowed to form on the valve stem. Valve stem frost can damage packing as the stem travels through the packing rings.

Packing Installation

Packing parts are subject to normal wear and must be inspected and replaced as necessary. The frequency of inspection and replacement of parts depends upon the severity of service conditions or the requirements of local, state, and federal rules and regulations.

⚠ WARNING

Avoid personal injury or property damage from sudden release of process pressure or bursting of parts. Before performing any maintenance operations:

- **Do not remove the actuator from the valve while the valve is still pressurized.**
- **Always wear protective gloves, clothing, and eyewear when performing any maintenance operations to avoid personal injury.**
- **Disconnect any operating lines providing air pressure, electric power, or a control signal to the actuator. Be sure the actuator cannot suddenly open or close the valve.**

- **Use bypass valves or completely shut off the process to isolate the valve from process pressure. Relieve process pressure from both sides of the valve. Drain the process media from both sides of the valve.**
- **Vent the pneumatic actuator loading pressure and relieve any actuator spring precompression.**
- **Use lock-out procedures to be sure that the above measures stay in effect while you work on the equipment.**
- **The valve packing box may contain process fluids that are pressurized, *even when the valve has been removed from the pipeline*. Process fluids may spray out under pressure when removing the packing hardware or packing rings, or when loosening the packing box pipe plug.**
- **Check with your process or safety engineer for any additional measures that must be taken to protect against process media.**

1. Refer to the appropriate valve body and actuator instruction manuals. Disassemble the control valve as required to gain access to the packing box. Remove the packing box components.
2. Examine the valve stem. The surface that contacts the packing must be smooth and free of scratches and nicks. If another style of graphite packing had been installed, the packing may have left a black deposit of graphite coating on the stem. If this deposit has built up or has affected the valve stem finish, the stem should be polished to a 0.1 micro-meter (4 micro-inch) RMS finish.
3. Thoroughly clean and dry the packing cavity, valve stem, and all metal packing parts (packing box ring, lantern ring, and packing follower). Also, clean the threads of the packing flange studs and nuts (figure 1). Lubricate these threads and the faces of the packing flange nuts during the remainder of the installation with a moly disulfide or equivalent type of lubricant.
4. Select the correct installation figure reference according to the valve design and packing arrangement (single, double, or leak-off).
5. Install the metal packing parts (figures 2, 3, or 4) that go to the bottom of the packing cavity.

⚠ WARNING

To avoid valve leakage during operation or personal injury, it is necessary, when installing the packing, to avoid trapping air between the rings and to give side support to the rings so they do not spread out under the compression of adding more rings. This may be accomplished by installing only one ring at a time.

6. Install only one packing ring at a time. Push each of the new packing rings into the packing box until it presses against the ring below it.

If installing double or leak-off packing, start the last lower packing ring and then force all the lower packing rings and lantern ring(s) all the way into the packing cavity. Then install the upper packing rings in the same manner.

Figure 1. Typical Single Packing Arrangement Shown Installed in Bonnet

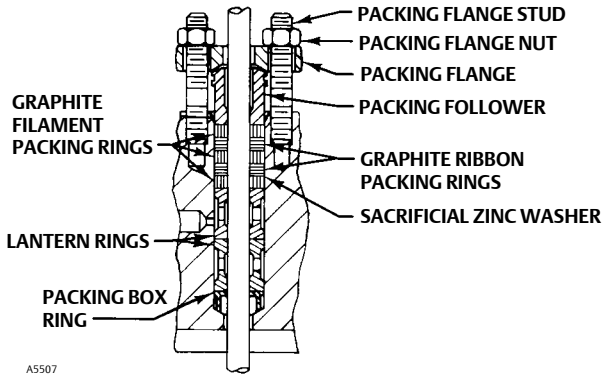

Figure 2. Single Packing Arrangements

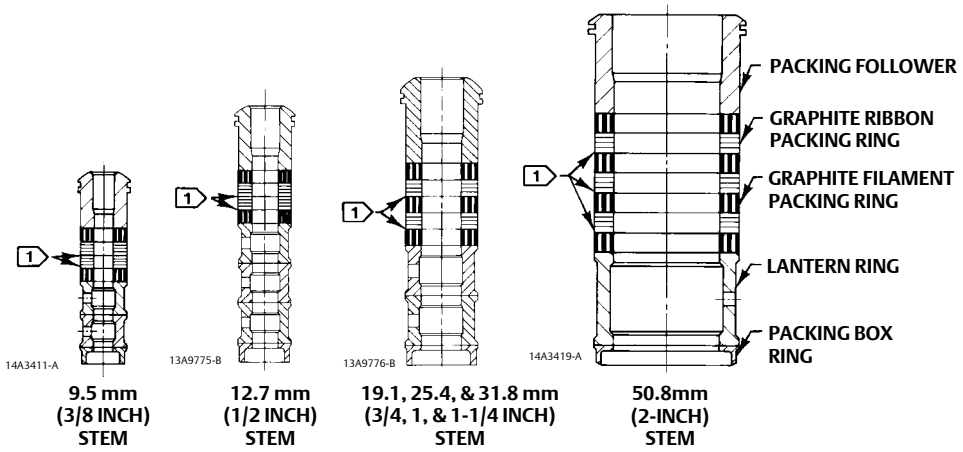

NOTE:
1 0.102mm (0.004 INCH) THICK SACRIFICIAL ZINC WASHERS; USE ONLY ONE BELOW EACH GRAPHITE RIBBON RING.
A5513

Table 1. Single Packing Arrangements

STEM DIAMETER		ARRANGEMENT ASSEMBLY DRAWING
mm	Inch	
9.5	3/8	14A3411
12.7	1/2	13A9775
19.1	3/4	13A9776
25.4	1	14A2340
31.8	1-1/4	14A3412
50.8	2	14A3419

CAUTION

Loss of packing performance and damage to the valve stem could result if metal parts such as the packing follower come in contact with the valve stem. When installing packing parts or making packing adjustments, make sure that the inside diameter of the packing follower does not contact the valve stem.

7. Replace the packing follower, packing flange, and packing flange nuts.

Note

If the packing needs additional tightening after the valve is in service, the packing flange nuts may be tightened to the recommended maximum torque. Excessive valve stem friction may result if the recommended maximum torque is exceeded. The recommended minimum torque is necessary to maintain a stem seal.

Figure 3. Double Packing Arrangements

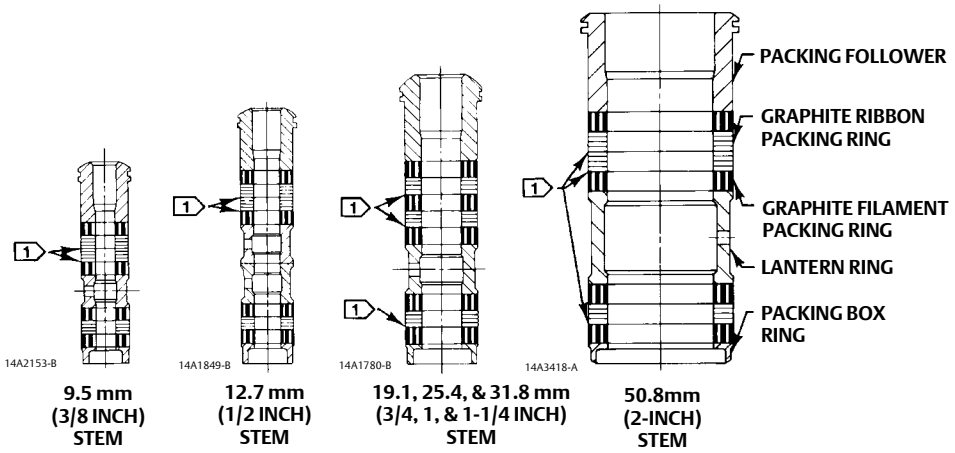

NOTE:
1 0.102mm (0.004 INCH) THICK SACRIFICIAL ZINC WASHERS; USE ONLY ONE BELOW EACH GRAPHITE RIBBON RING.

A5514

Table 2. Double Packing Arrangements

STEM DIAMETER		ARRANGEMENT ASSEMBLY DRAWING
mm	Inch	
9.5	3/8	14A2153
12.7	1/2	14A1849
19.1	3/4	14A1780
25.4	1	14A3413
31.8	1-1/4	14A3414
50.8	2	14A3418

8. Evenly tighten the packing flange nuts to force the packing rings against the lantern ring(s). Continue to evenly tighten the nuts until the maximum recommended torque shown in table 4 is reached. Then, loosen the packing flange nuts and retighten to the recommended minimum torque in table 4.
9. Reassemble the control valve assembly according to the instructions in the appropriate instruction manual.

Figure 4. Leak-Off Packing Arrangements

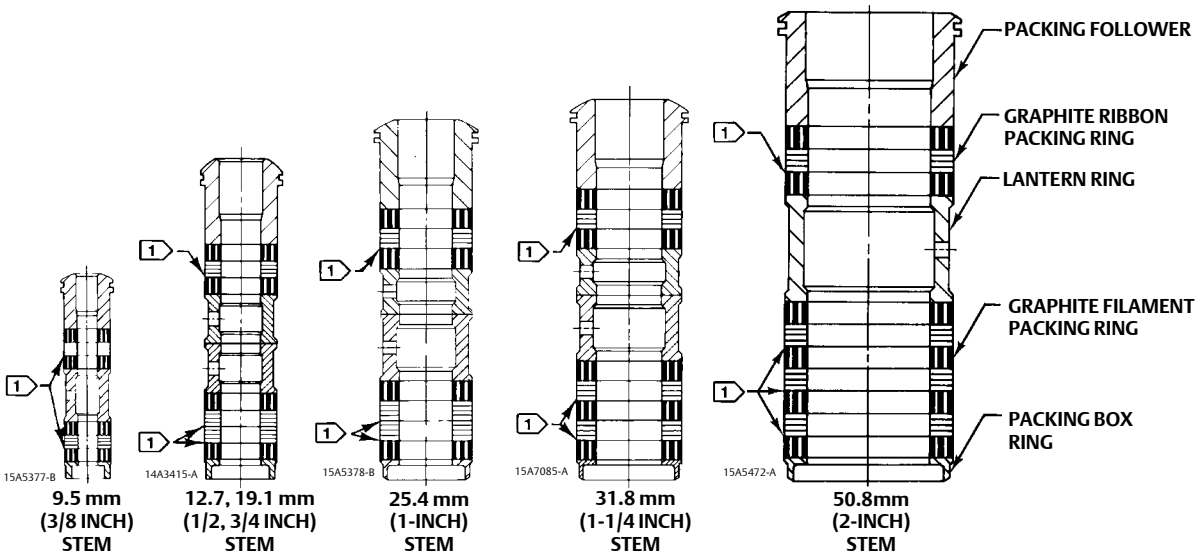

NOTE:
1 0.102mm (0.004 INCH) THICK SACRIFICIAL ZINC WASHERS; USE ONLY ONE BELOW EACH GRAPHITE RIBBON RING.

A5508

Table 3. Leak-Off Packing Arrangements

STEM DIAMETER		ARRANGEMENT ASSEMBLY DRAWING
mm	Inch	
9.5	3/8	15A5377
12.7	1/2	14A2485
19.1	3/4	14A3415
25.4	1	15A5378
31.8	1-1/4	15A7085
50.8	2	15A5472

Table 4. Recommended Packing Flange Nut Torques(1)

VALVE STEM DIAMETER		VALVE RATING	MAXIMUM		MINIMUM	
mm	Inch		N•m	Lbf•ft	N•m	Lbf•ft
9.5	3/8	CL150	5	4	3	2
		CL300	7	5	4	3
		CL600	8	6	5	4
		CL900	10	7	7	5
		CL1500	12	9	8	6
12.7	1/2	CL150	8	6	5	4
		CL300	10	7	7	5
		CL600	14	10	10	7
		CL900	18	13	12	9
		CL1500	22	16	15	11
		CL2500	24	18	18	13
15.9	5/8	CL150	7	5	4	3
		CL300	8	6	5	4
		CL600	12	9	8	6
19.1	3/4	CL150	16	12	11	8
		CL300	20	15	14	10
		CL600	30	22	20	15
		CL900	41	30	27	20
		CL1500	50	37	34	25
		CL2500	61	45	41	30
25.4	1	CL300	37	27	24	18
		CL600	50	37	34	25
		CL900	62	46	42	31
		CL1500	77	57	52	38
		CL2500	91	67	61	45
31.8	1-1/4	CL300	49	36	32	24
		CL600	66	49	45	33
		CL900	83	61	56	41
		CL1500	102	75	68	50
		CL2500	122	90	81	60
50.8	2	CL300	65	48	43	32
		CL600	91	67	61	45
		CL900	119	88	80	59
		CL1500	146	108	98	72
		CL2500	170	125	115	85

1. With lubricated packing flange studs.

Parts Ordering

Refer to the appropriate valve body instruction manual for all bonnet packing parts.

Determine the parts needed from the appropriate packing arrangement in figures, 2, 3, or 4. Include the serial number of the valve in all correspondence concerning replacement parts or maintenance.

⚠ WARNING

Use only genuine Fisher replacement parts. Components that are not supplied by Emerson Process Management should not, under any circumstances, be used in any Fisher valve, because they may void your warranty, might adversely affect the performance of the valve, and could cause personal injury and property damage.

Neither Emerson, Emerson Process Management, nor any of their affiliated entities assumes responsibility for the selection, use or maintenance of any product. Responsibility for proper selection, use, and maintenance of any product remains solely with the purchaser and end user.

Fisher is a mark owned by one of the companies in the Emerson Process Management business unit of Emerson Electric Co. Emerson Process Management, Emerson, and the Emerson logo are trademarks and service marks of Emerson Electric Co. All other marks are the property of their respective owners.

The contents of this publication are presented for informational purposes only, and while every effort has been made to ensure their accuracy, they are not to be construed as warranties or guarantees, express or implied, regarding the products or services described herein or their use or applicability. All sales are governed by our terms and conditions, which are available upon request. We reserve the right to modify or improve the designs or specifications of such products at any time without notice.

Emerson Process Management
Marshalltown, Iowa 50158 USA
Sorocaba, 18087 Brazil
Chatham, Kent ME4 4QZ UK
Dubai, United Arab Emirates
Singapore 128461 Singapore

www.Fisher.com

© 1990, 2012 Fisher Controls International LLC. All rights reserved.