Fisher® TBX Steam Conditioning Valve

The Fisher TBX Steam Conditioning Valve is designed to handle the most severe applications in today's cycling power plants as well as provide precise pressure and temperature control for process applications. The TBX incorporates over 30 years of steam conditioning experience and product development. The valve body is designed with the latest finite element analysis (FEA) and computational fluid dynamics (CFD) tools to optimize performance and reliability for demanding steam systems.

The TBX valve design provides the ultimate combination of performance and maintainability (see figure 2). The TBX valve incorporates low noise Whisper Trim™ technology. The simplified trim configuration is thermally compensated to handle rapid changes in temperatures, as expected during a turbine trip, without any sticking or binding.

Water atomization and vaporization are key elements in any steam conditioning application. The TBX design incorporates a spraywater manifold of variable geometry AF nozzles that produce an optimized spray pattern over a wide operating range. These nozzles are strategically placed to achieve optimal mixing and quick vaporization at all flowing conditions (see figure 2). Years of research in spray atomization and vaporization were key to optimizing the water injection system. Extensive use of CFD analysis, in addition to field performance feedback, was used to validate spray system enhancements.

W8740-2A

Whisper Trim and WhisperFlo Cages

To help attenuate aerodynamic noise, Whisper Trim III cages are standard with TBX control valves.

WhisperFlo™ cages (figure 1) are also available to attenuate aerodynamic noise. Contact your Emerson Process Management sales office for more information.

Features

- **Total Steam Control--** Combines pressure and temperature control in a single valve.
- **Full Pressure Drop Capability--** Rugged cage-guided design enables handling of full pressure drop of main steam.
- **Noise Attenuation--** Whisper III and WhisperFlo trims help to attenuate the noise by 30 to 40 dBA.
- **High Temperature Capability with Available Class V Shutoff--** Use of the Fisher Bore Seal trim gives capability of standard Class V shutoff up to 593°C (1100°F). This unique balanced trim is field-proven. See figure 4.
- **Forged Valve Body--** FEA designed valve body can handle the most demanding applications without thermal stress problems.
- **Flow Up Angle--** Permits vertical stem orientation for ease of maintenance in most applications.
- **Flow Down Angle--** Permits vertical stem orientation for ease of maintenance in most applications.
- **Thermally Compensated Trim--** The cage is case-hardened for maximum life and is allowed to grow during thermally induced excursions. The plug is continuously guided and employs cobalt-based overlays for guide bands and tight metal-to-metal shutoff against the seat.
- **Easy Maintenance Seat Ring--** Welded design provides Class V shutoff and long life. Deep Alloy 6 overlay can be refinished multiple times to maintain tight shutoff. Bolted seat rings are also available for ease of maintenance.
- **Spiral-Wound Gaskets for Excellent Bonnet Sealing Under All Service Conditions--** Premium gaskets provided with N06600 windings and graphite filler material.
- **Precise Spraywater Injection--** CFD designed spray manifold determines water injection point and insertion depth to maximize mixing and quick vaporization.
- **High Turndown--** Standard trim control rangeability is 50:1. Special construction can provide up to 75:1 turndown.
- **Quick Stroking Actuation--** High performance pneumatic piston actuators with FIELDVUE™ digital valve controllers can achieve full stroke in less than 2 seconds while still maintaining highly accurate step response. Optimized digital valve controllers and accessory packages are available when high stroke speeds are required. Contact your Emerson Process Management sales office for assistance.
- **Customized Valve Body and Trim--** Valve is designed to meet your exact demanding application needs.
- **Performance Diagnostics--** With the self-diagnostic capability, questions can be answered about a valve's performance, without pulling the valve from the line. The present valve/actuator signature (seat load, friction, etc.) can be compared against previously stored signatures to discover performance changes before they cause process control problems.
- **More Compact Valve Body and Trim Profile--** Creates a lighter valve that requires less support without compromising structural integrity.

Options

- **Blowdown Trim--** Protects the working trim and machined surfaces of the valve body during steam blow.

- **Hydro-Plug--** Provides a convenient way to establish hydrotest boundaries associated with using a split pressure class valve.

- **Split Functionality--** When piping dictates, the TBX valve can be provided as separate components allowing the pressure control in the valve body and separate temperature reduction downstream in a steam cooler.

- **Commissioning Service--** Proper installation of blowdown trim and hydro-plug fixtures, along with reassembly and calibration of turbine bypass valves, is critical for the valves to be ready for service when needed. Let skilled Emerson Process Management technicians take care of this vital commissioning service to protect this very important plant asset.

- **Diagnostic Services--** The Emerson Process Management Diagnostic Services Group delivers world class services and innovative technologies for top performance of critical service valves and other production assets.

- **Magnetite Strainer Design--** protects the bore seal and piston ring from magnetite buildup and prevents trim strokage.

- **Bolted Seat Ring--** Seat ring is bolted to the valve body for easy removal, replacement, or maintenance.

Figure 1. Magnetite Catcher

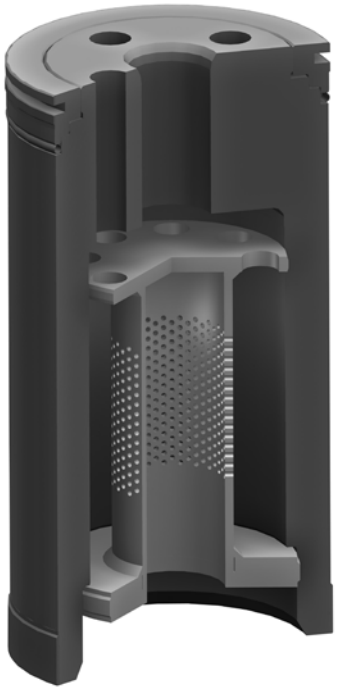

Physical Specifications

End Connection Sizes and Valve Body Ratings

VALVE INLET NPS	INLET PRESSURE RATINGS
4-18	CL150 - CL2500
20-24	CL150 - CL1500

VALVE OUTLET NPS	OUTLET PRESSURE RATINGS
8-18	CL150 - CL2500
20	CL150 - CL1500
24	CL150 - CL900
30	CL150 - CL600
36	CL150 - CL300

End Connection Types

- Buttweld (all sizes)
- Raised Face Flanges (all sizes)

Configuration

Angle Pattern (Flow Up or Flow Down)

Maximum Pressure Drop[1]

Valve with Whisper Trim III Cage: A1 - D3 available

0.99 $\Delta P/P_1$ maximum

Valve with WhisperFlo Trim (Flow Up Only):

- **Levels X, Y, and Z:** 0.94 $\Delta P/P_1$ maximum. If greater than 0.94 $\Delta P/P_1$, consult your Emerson Process Management sales office

Flow Characteristics[4]

Whisper Trim III Cages: Linear
WhisperFlo: Linear

Flow Direction

Whisper Trim III Cage: Flow Up or Flow Down
WhisperFlo: Flow Up only

Port Diameter and Maximum Travel

See table 1 for Whisper Trim III cages
See table 3 for WhisperFlo

Bonnet Type

Bolted

Seat Ring Type

- Welded in (standard)
- Bolted in (optional)

Shutoff Classifications per ANSI/FCI 70-2 and IEC 60534-4

- Class V (standard) (Whisper Trim III)
- Class V (standard) (WhisperFlo)
- Class IV (available)

1. Standard end connection sizes.
2. Values given are Inlet versus Outlet. # represents inlet size, less than or equal to the outlet size, per customer requirements.
3. Not all valve sizes are available in all pressure ratings.
4. Contact your Emerson Process Management sales office for special characterized cages.

Table 1. Port Diameter and Maximum Travel for Flow Up Whisper Trim III

SEAT RING TYPE	WHISPER LEVEL	INLET PRESSURE RATING	PORT DIAMETER		MAXIMUM TRAVEL	
			mm	Inches	mm	Inches
Welded Seat	A1-C3	CL150 - CL2500	120	4.70	197	7.75
			159	6.25	264	10.38
			194	7.62	321	12.62
			234	9.20	391	15.38
		CL150 - CL1500	285	11.20	473	18.62
			349	13.75	581	22.88
		CL150 - CL900	424	16.70	606	23.88
			507	19.94	606	23.88
	D1-D3	CL150 - CL2500	87	3.44	165	6.5
			120	4.70	197	7.75
			159	6.25	264	10.38
			194	7.62	321	12.62
		CL150 - CL1500	234	9.20	391	15.38
			285	11.20	473	18.62
		CL150 - CL900	349	13.75	571	22.88
			424	16.70	606	23.88
Bolted Seat	ALL	CL150 - CL2500	87	3.44	165	6.5
			120	4.70	197	7.75
			159	6.25	264	10.38
			194	7.62	321	12.62
		CL150 - CL1500	234	9.20	391	15.38
			285	11.20	473	18.62
		CL150 - CL900	349	13.75	571	22.88
			424	16.70	606	23.88

Table 2. Port Diameter and Maximum Travel for Flow Down Whisper Trim III

INLET PRESSURE RATING	PORT DIAMETER		WHISPER LEVEL	MAXIMUM TRAVEL	
	mm	Inches		mm	Inches
CL150 - CL2500	159	4.70	A1,A3,B1,B3	73	2.88
			C1,C3	121	4.75
	194	6.25	A1,A3,B1,B3	92	3.62
			C1,C3	159	6.25
	234	7.62	A1,A3,B1,B3	117	4.62
			C1,C3	213	8.38
CL150 - CL1500	285	9.20	A1,A3,B1,B3	137	5.38
			C1,C3	235	9.25
	349	11.20	A1,A3,B1,B3	171	6.75
			C1,C3	311	12.25
CL150 - CL900	424	13.75	A1,A3,B1,B3	219	8.62
			C1,C3	397	15.62
	507	16.70	A1,A3,B1,B3	267	10.5
			C1,C3	480	18.88

Material Specifications

Body/Bonnet

- SA105 (Carbon Steel)
- SA182 Grade F22 (2.25Cr-1Mo) up to 566°C (1050°F)
- SA182 Grade F91 (9Cr-1Mo-V)

Bonnet Bolting

- SA105 Valve Body — SA193 Grade B7 up to 427°C (800°F)
- SA182 Grade F22 Valve Body — SA193 Grade B16 up to 524°C (975°F), N07718 above 524°C (975°F) to 566°C (1050°F)
- SA182 Grade F91 Valve Body — N07718 up to 593°C (1100°F)

Control Plug

- F22 with Alloy 6 guiding and seating surfaces[3]
- F91 with Alloy 6 guiding and seating surfaces[4]

Stem

- SA479 Type S20910[3]
- All others use N07718 stems[4]

Cage

- SA182, S910 cage, F91 retainer[2, 4] Grade F22 Nitrided[1]
- S41000 cage, F22 Nitrided retainer[2, 3]
- SA182 F91 Nitrided[1, 4]

Bolted Seat

- F22 with Alloy 6 up to 482°C (900°F)
- N06625 with Alloy 6 above 482°C (900°F)
- F22 Nitrided cage (optional)

Welded Seat (standard)

- Carbon Steel with Alloy 6 Seating Surface[3]
- F22 with Alloy 6 Seating Surface[3]
- F91 with Alloy 6 Seating Surface[4]

Piston Rings

Alloy 6 with N07750 Expander

Bore Seal

N07718

Gaskets

N07750/Graphite

Packing

Graphite/Flexible Graphite

Nozzles

S41000 SST

1. For Whisper III constructions.
2. For WhisperFlo constructions.
3. For use with SA105 or F22 valve body.
4. For use with F91 valve body.

Table 3. Port Diameter and Maximum Travel for Flow Up WhisperFlo Trim

SEAT RING TYPE	INLET PRESSURE RATING	PORT DIAMETER		MAXIMUM TRAVEL	
		mm	Inches	mm	Inches
ALL	CL150-CL2500	87	3.44	165	6.5
		109	4.28	241	9.5
		137	5.38	241	9.5
		178	7.00	311	12.25
	CL150-CL1500	203	8.00	384	15.12
		254	10.00	457	18
		279	11.00	527	20.75
	CL150-CL900	375	14.75	606	23.88
		464	18.25	606	23.88

Figure 2. Fisher TBX Operation - Flow Up

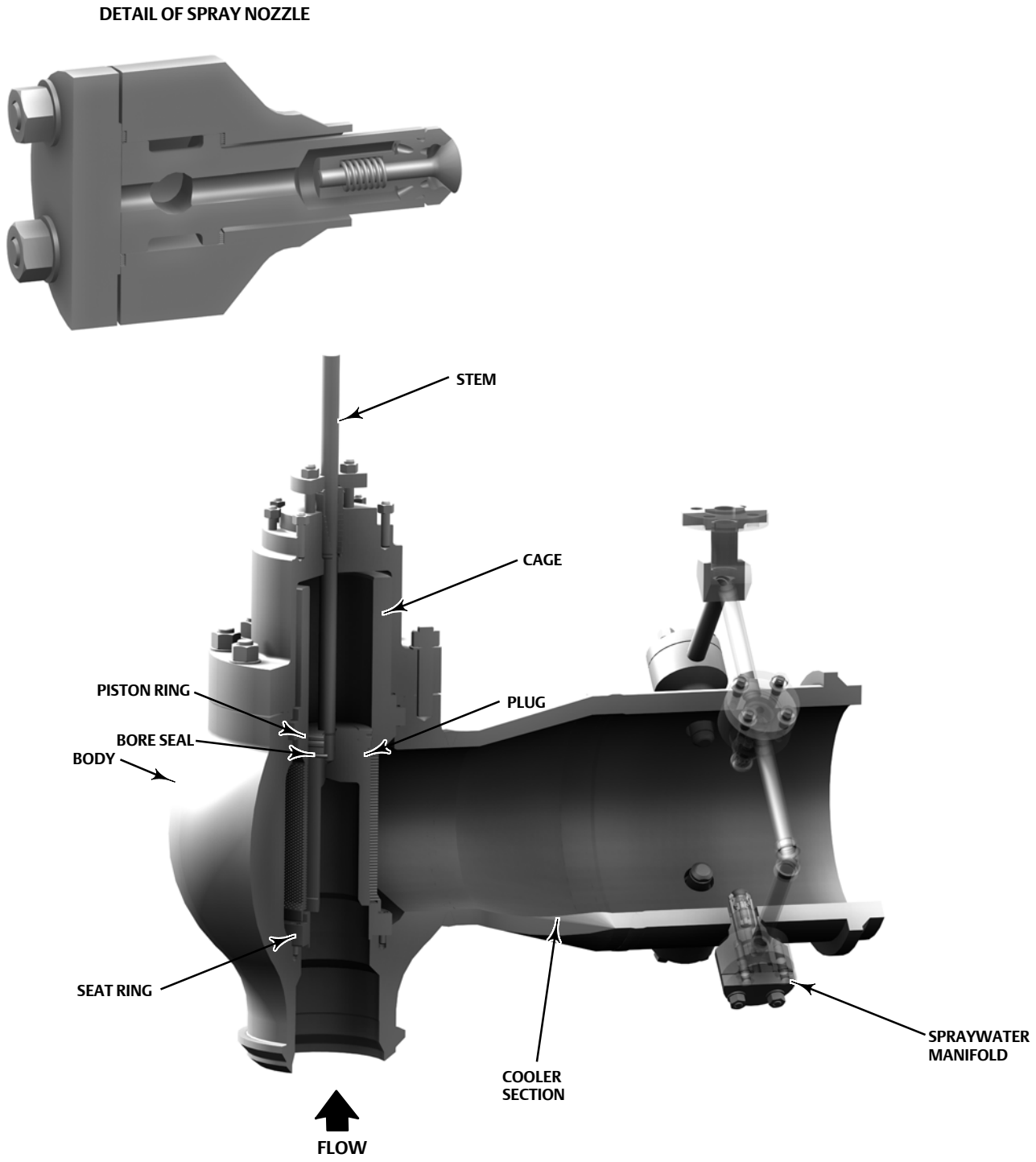

Figure 3. Alternative Fisher TBX Design - Flow Down

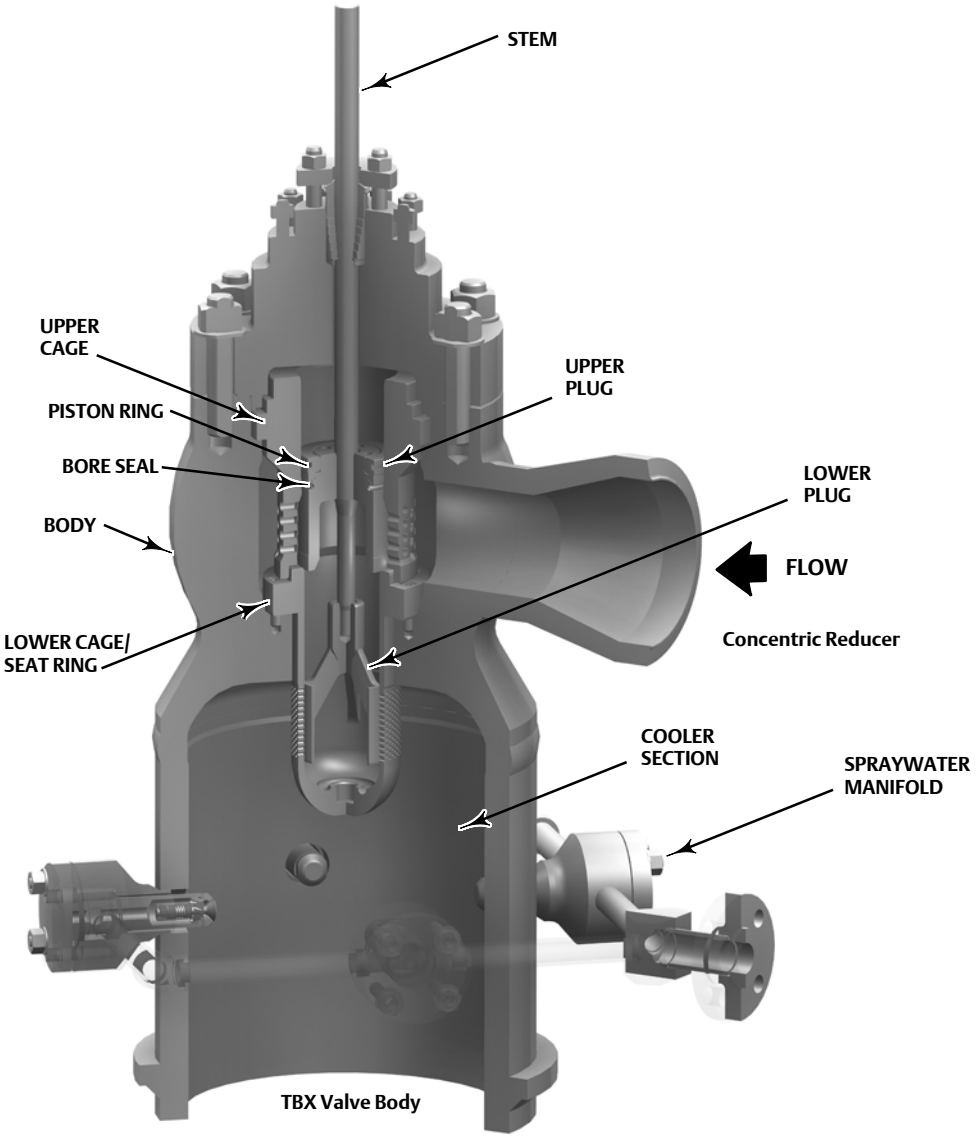

Coefficients

Table 4. Fisher TBX, Whisper Trim III, Flow Up Through the Port, Linear Characteristic(1)

Port Diameter		Inlet Size, NPS and Inlet Class	Whisper III Levels	Maximum C_v Flow Coefficient	X_t
mm	Inches				
120	4.70	4 CL600 to 1500	A1 and A3	259	0.65
			B1 and B3	259	0.65
			C1 and C3	228	0.65
			D3	228	0.65
		4 CL2500	A1 and A3	219	0.65
			B1 and B3	209	0.65
			C1 and C3	206	0.65
			D3	206	0.65
		6 CL600 to 1500 and 8 through 12 CL600 to 2500	A1 and A3	578	0.65
			B1 and B3	397	0.65
			C1 and C3	291	0.65
			D3	291	0.65
		6 CL2500	A1 and A3	484	0.65
			B1 and B3	369	0.65
			C1 and C3	278	0.65
			D3	278	0.65
159	6.25	6 CL600 to 1500	A1 and A3	722	0.65
			B1 and B3	619	0.65
			C1 and C3	456	0.65
			D3	475	0.65
		6 CL2500	A1 and A3	488	0.65
			B1 and B3	488	0.65
			C1 and C3	403	0.65
			D3	475	0.65
		8 CL600 to 1500 and 10 through 14 CL600 to 2500	A1 and A3	1009	0.65
			B1 and B3	719	0.65
			C1 and C3	497	0.65
			D3	475	0.65
		8 CL2500	A1 and A3	888	0.65
			B1 and B3	675	0.65
			C1 and C3	478	0.65
			D3	475	0.65
194	7.62	8 CL600 to 1500	A1 and A3	1244	0.65
			B1 and B3	978	0.65
			C1 and C3	691	0.65
			D3	691	0.65
		8 CL2500	A1 and A3	913	0.65
			B1 and B3	844	0.65
			C1 and C3	641	0.65
			D3	641	0.65
		10 CL600 to 1500 and 12 through 16 CL600 to 2500	A1 and A3	1481	0.65
			B1 and B3	1063	0.65
			C1 and C3	725	0.65
			D3	725	0.65
		10 CL2500	A1 and A3	1375	0.65
			B1 and B3	1025	0.65
			C1 and C3	709	0.65
			D3	709	0.65

1. Reduction of standard inlet size may affect capacity. Consult your Emerson Process Management sales office for additional information.

Table 5. Fisher TBX, Whisper Trim III, Flow Up Through the Port, Linear Characteristic(1)

Port Diameter		Inlet Size, NPS and Inlet Class	Whisper III Levels	Maximum C_v Flow Coefficient	X_t
mm	Inches				
234	9.20	10 CL600 to 1500	A1 and A3	1913	0.65
			B1 and B3	1441	0.65
			C1 and C3	1044	0.65
			D3	1044	0.65
		10 CL2500	A1 and A3	1466	0.65
			B1 and B3	1284	0.65
			C1 and C3	975	0.65
			D3	975	0.65
		12 CL600 to 1500 and 14 through 18 CL600 to 2500	A1 and A3	2181	0.65
			B1 and B3	1528	0.65
			C1 and C3	1081	0.65
			D3	1081	0.65
		12 CL2500	A1 and A3	1994	0.65
			B1 and B3	1466	0.65
			C1 and C3	1053	0.65
			D3	1053	0.65
285	11.20	12 CL600 to 1500	A1 and A3	2791	0.65
			B1 and B3	2128	0.65
			C1 and C3	1503	0.65
			D3	1503	0.65
		14 through 20 CL600 to 1500	A1 and A3	3181	0.65
			B1 and B3	2269	0.65
			C1 and C3	1556	0.65
			D3	1556	0.65
349	13.75	16 CL600 to 1500	A1 and A3	4300	0.65
			B1 and B3	3225	0.65
			C1 and C3	2291	0.65
			D3	2291	0.65
		18 through 24 CL600 to 1500	A1 and A3	4781	0.65
			B1 and B3	3394	0.65
			C1 and C3	2359	0.65
			D3	2359	0.65
424	16.70	18 CL600 to 900	A1 and A3	5359	0.65
			B1 and B3	4088	0.65
			C1 and C3	2866	0.65
			D3	2866	0.65
		20 CL600 to 900	A1 and A3	5891	0.65
			B1 and B3	4300	0.65
			C1 and C3	2953	0.65
			D3	2953	0.65
		22 through 24 CL600 to 900	A1 and A3	6153	0.65
			B1 and B3	4406	0.65
			C1 and C3	2997	0.65
			D3	2997	0.65
507	19.94	22 CL600 to 900	A1 and A3	7131	0.65
			B1 and B3	5119	0.65
			C1 and C3	3503	0.65
		24 CL600 to 900	A1 and A3	7875	0.65
			B1 and B3	5406	0.65
			C1 and C3	3581	0.65

1. Reduction of standard inlet size may affect capacity. Consult your Emerson Process Management sales office for additional information.

Table 6. Fisher TBX Whisper III flow down through the Port, Linear Characteristic

Port Diameter		Whisper III Level	Max Cv Flow Coefficient	Xt
mm	Inch			
120	4.7	A1	178.4	0.81
		A3	170.7	0.8
		B1	169.4	0.799
		B3	173.7	0.802
		C1	140.7	0.752
		C3	140.2	0.752
160	6.25	A1	301.2	0.812
		A3	287.7	0.801
		B1	299.9	0.811
		B3	293.6	0.806
		C1	245.6	0.764
		C3	235.8	0.753
194	7.62	A1	475.3	0.814
		A3	447.6	0.798
		B1	475.8	0.814
		B3	468.5	0.81
		C1	379.6	0.759
		C3	378.1	0.758
215	8.5	A1	619.8	0.805
		A3	596	0.794
		B1	611.7	0.802
		B3	601.6	0.798
		C1	484.2	0.747
		C3	481	0.746
285	11.2	A1	1009.8	0.81
		A3	966.59	0.798
		B1	1018.2	0.812
		B3	1007.3	0.809
		C1	814.5	0.756
		C3	812.5	0.756
350	13.75	A1	1590.7	0.809
		A3	1518.7	0.797
		B1	1576.7	0.807
		B3	1576.1	0.807
		C1	1280.9	0.756
		C3	1280.4	0.756
425	16.7	A1	2356.6	0.811
		A3	2245.7	0.799
		B1	2346	0.811
		B3	2309.7	0.806
		C1	1917.8	0.76
		C3	1860	0.753

Table 7. Fisher TBX, WhisperFlo Trim, Flow Up Through the Port, Linear Characteristic

Port Diameter		WhisperFlo Level	Max Cv Flow Coefficient	Xt
mm	Inch			
3.43	7.75	X	288	0.575
		Y	213	0.575
		Z	133	0.525
4.28	9.5	X	446	0.575
		Y	352	0.575
		Z	234	0.525
5.375	9.5	X	703	0.575
		Y	508	0.575
		Z	312	0.525
7	12.625	X	1171	0.532
		Y	808	0.532
		Z	505	0.525
8	15.375	X	1558	0.532
		Y	1247	0.532
		Z	748	0.532
10	18.625	X	2435	0.532
		Y	1635	0.532
		Z	1040	0.532
11	22.875	X	2814	0.532
		Y	2314	0.532
		Z	1286	0.532
14.75	22.875	X	5297	0.532
		Y	3947	0.532
		Z	2368	0.532
18.25	22.875	X	7105	0.532
		Y	4342	0.532
		Z	2763	0.532

Figure 4. Fisher TBX Bore Seal Trim in Closed Position

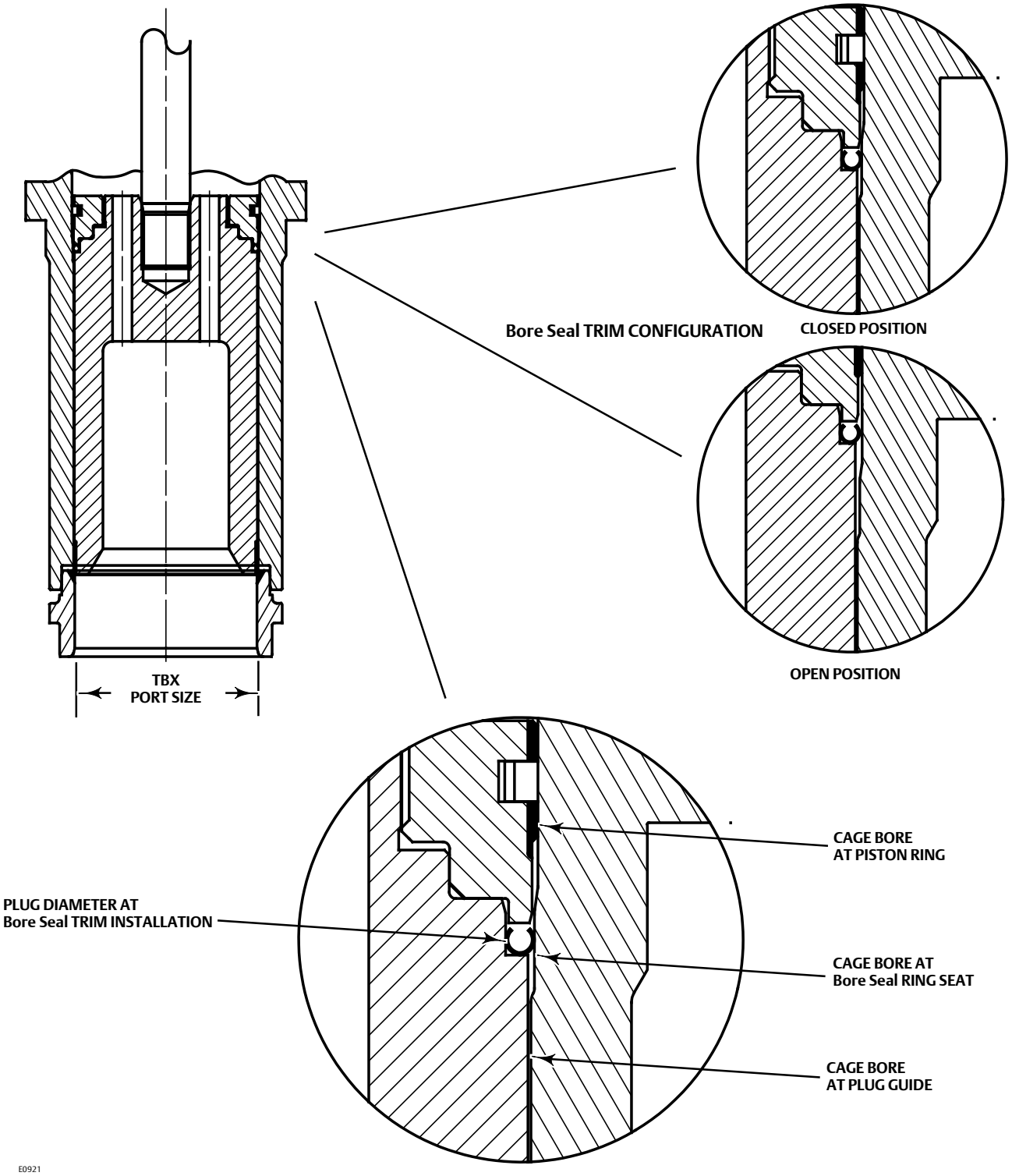

System Noise Level

Today's power plants must comply with strict noise limitations, especially those that are located close to residential areas. Satisfying a low fence line noise requirement requires a complete understanding of the system and how individual components can affect the total noise transmitted to the plant boundary. Extensive steam conditioning noise research has been conducted at the Marshalltown research facility, resulting in a new understanding of the impact of sparger installations in turbine exhaust ducts. Testing has revealed critical spatial relationships of multiple spargers that must be maintained to prevent noise generation. This knowledge, together with the application of low noise technology trims and pressure reducing devices, allows the Emerson Process Management research facility to accurately predict the system noise level.

Bore Seal Trim

TBX valves provide Class V leakage as a standard. The design employs a variation of the proven C-seal trim with enhancements for use with the TBX hung cage. The sealing design is called Bore Seal trim (figure 4). In the Bore Seal trim, the primary plug-to-seat interface is a metal-to-metal line contact while the secondary metallic seal engages a controlled bore region in the cage when the plug is seated. During modulation, the secondary seal does not contact the upper cage wall and the controlled bore region remains protected, which extends the shutoff life of the valve.

Neither Emerson, Emerson Process Management, nor any of their affiliated entities assumes responsibility for the selection, use or maintenance of any product. Responsibility for proper selection, use, and maintenance of any product remains solely with the purchaser and end user.

Fisher, Whisper Trim, WhisperFlo, and FIELDVUE are marks owned by one of the companies in the Emerson Process Management business division of Emerson Electric Co. Emerson Process Management, Emerson, and the Emerson logo are trademarks and service marks of Emerson Electric Co. All other marks are the property of their respective owners.

The contents of this publication are presented for informational purposes only, and while every effort has been made to ensure their accuracy, they are not to be construed as warranties or guarantees, express or implied, regarding the products or services described herein or their use or applicability. All sales are governed by our terms and conditions, which are available upon request. We reserve the right to modify or improve the designs or specifications of such products at any time without notice.

Emerson Process Management
Marshalltown, Iowa 50158 USA
Sorocaba, 18087 Brazil
Chatham, Kent ME4 4QZ UK
Dubai, United Arab Emirates
Singapore 128461 Singapore

www.Fisher.com

© 2003, 2011 Fisher Controls International LLC. All rights reserved

EMERSON
Process Management