Types 63EG and 1098-63EGR

Introduction

This installation guide provides instructions for installation, startup, and adjustment. To receive a copy of the Instruction Manual, contact your local Sales Office or view a copy at www.fisherregulators.com. For further information refer to: Types 63EG and 1098-63EGR Instruction Manual, Form 5110, D100315X012.

P.E.D. Category

This product may be used as a safety accessory with pressure equipment in the following Pressure Equipment Directive 97/23/EC categories. It may also be used outside of the Pressure Equipment Directive using sound engineering practice (SEP) per table below.

PRODUCT SIZE		CATEGORIES	FLUID TYPE
DN	NPS		
25	1	SEP	1
50 to 150	2 to 6	II	

Specifications

Available Constructions
Type 63EG with a 6358 Series Pilot
Type 1098-63EGR with a Type 6358B Pilot

Main Valve Body and End Connection Styles[1, 2]
Cast Iron:
NPT, CL125 FF, or CL250 RF flanged: DN 25 and 50 / NPS 1 and 2
CL125 FF or CL250 RF flanged: DN 50, 80, 100, 150, and 200 x 150 / NPS 2, 3, 4, 6, and 8 x 6
Steel or Stainless Steel:
NPT, BWE, SWE, CL150 RF, CL300 RF, CL600 RF, or PN 16/25/40 flanged: DN 25 and 50 / NPS 1 and 2
BWE, CL150 RF, CL300 RF, CL600 RF, or PN 16/25/40 flanged: DN 50, 80, 100, 150, and 200 x 150 / NPS 2, 3, 4, 6, and 8 x 6

Maximum Relief (Inlet) Pressure[1, 2]
Type 63EG: 27,6 bar / 400 psig
Type 1098-63EGR: 5,7 bar / 82 psig

Maximum Actuator Pressures[1, 2] **(Standard Size 40 with Type 1098-63EGR Only)**
Set Pressure: 4,5 bar / 65 psig
Operating Pressure: 5,2 bar / 75 psig
Emergency Casing Pressure: 5,7 bar / 82 psig

Proof Test Pressure
All Pressure Retaining Components have been proof tested per Directive 97/23/EC - Annex 1, Section 7.4

Relief Set Pressure/Backpressure Control Ranges[1]
See Table 1

Maximum Temperature Capabilities[1]
Nitrile (NBR):
-29° to 82°C / -20° to 180°F
Fluorocarbon (FKM):
-18° to 149°C / 0° to 300°F
Water limited to -18° to 82°C / 0° to 180°F
Ethylenepropylene (EPDM):
-29° to 135°C / -20° to 275°F
Perfluoroelastomer (FFKM):
-18° to 218°C / 0° to 425°F

Installation

WARNING

Only qualified personnel should install or service a regulator. Regulators should be installed, operated, and maintained in accordance with international and applicable codes and regulations, and Emerson Process Management Regulator Technologies, Inc. instructions.

If the regulator vents fluid or a leak develops in the system, it indicates that service is required. Failure to take the regulator out of service immediately may create a hazardous condition.

Personal injury, equipment damage, or leakage due to escaping fluid or bursting of pressure-containing parts may result if this regulator is overpressured or is installed where service conditions could exceed the limits given in the Specifications section, or where conditions exceed any ratings of the adjacent piping or piping connections.

To avoid such injury or damage, provide pressure-relieving or pressure-limiting devices (as required by the appropriate code, regulation, or standard) to prevent service conditions from exceeding limits.

Additionally, physical damage to the regulator could result in personal injury and property damage due to escaping fluid. To avoid such injury and damage, install the regulator in a safe location.

Clean out all pipelines before installation of the regulator and check to be sure the regulator has not been damaged or has collected foreign material during shipping. For NPT bodies, apply pipe compound to the external pipe threads. For flanged bodies, use suitable line gaskets and approved piping and bolting practices. Install the regulator in any position desired, unless otherwise specified, but be sure flow through the body is in the direction indicated by the arrow on the body.

1. The pressure/temperature limits in this Installation Guide and any applicable standard or code limitation should not be exceeded.
2. Includes build-up.

D100315XUS2

Note

It is important that the regulator be installed so that the vent hole in the spring case is unobstructed at all times. For outdoor installations, the regulator should be located away from vehicular traffic and positioned so that water, ice, and other foreign materials cannot enter the spring case through the vent. Avoid placing the regulator beneath eaves or downspouts, and be sure it is above the probable snow level.

Overpressure Protection

The recommended pressure limitations are stamped on the regulator nameplate. Some type of overpressure protection is needed if the actual inlet pressure exceeds the maximum operating outlet pressure rating. Overpressure protection should also be provided if the regulator inlet pressure is greater than the safe working pressure of the downstream equipment. Regulator operation below the maximum pressure limitations does not preclude the possibility of damage from external sources or debris in the line. The regulator should be inspected for damage after any overpressure condition.

Startup

The regulator is factory set at approximately the midpoint of the spring range or the pressure requested, so an initial adjustment may be required to give the desired results. With proper installation completed and relief valves properly adjusted, slowly open the upstream and downstream shutoff valves.

Adjustment

To change the outlet pressure, remove the closing cap or loosen the locknut and turn the adjusting screw clockwise to increase outlet pressure or counterclockwise to decrease pressure. Monitor the outlet pressure with a test gauge during the adjustment. Replace the closing cap or tighten the locknut to maintain the desired setting.

Taking Out of Service (Shutdown)

WARNING

To avoid personal injury resulting from sudden release of pressure, isolate the regulator from all pressure before attempting disassembly.

Table 1. *Relief Set Pressure and Backpressure Control Ranges*

TYPE	PILOT TYPE	RELIEF SET PRESSURE RANGE	
		bar	Psig
63EG	6358	0,69 to 2,8 1,7 to 8,6	10 to 40 25 to 125
	6358B	0,69 to 2,1 2,1 to 4,1 4,1 to 8,6	10 to 30 30 to 60 60 to 125
	6358EB	5,9 to 9,7 9,0 to 13,8 12,4 to 24,1	85 to 140 130 to 200) 180 to 350)
	6358EBH	17,2 to 27,6	250 to 400)
1098-63EGR	6358B	0,21 to 1,2 1,0 to 2,8 2,4 to 4,5	3 to 18) 15 to 40 35 to 65

Table 2. *Minimum and Maximum Differential Pressures*

BODY SIZES		MAIN VALVE SPRING RANGE		MAIN VALVE SPRING PART NUMBER	MAIN VALVE SPRING COLOR	TYPE 63EG				TYPE 63EG WITH TYPE 1098 SIZE 40 ACTUATOR			
						Minimum Differential Pressure Required For Full Stroke		Maximum Differential Pressure		Minimum Differential Pressure Required For Full Stroke		Maximum Differential Pressure	
DN	NPS	bar	Psig			bar	Psig	bar	Psig	bar	Psig	bar	Psig
25	1	2,1 to 8,6 5,9 to 27,6	30 to 125 85 to 400	14A9687X012 14A9679X012	Green Red	4,8 10,3	70 150	8,6 27,6	125 400	0,17 - - - -	2.5 - - - -	4,1 - - - -	60 - - - -
50	2	0,69 to 2,8 2,1 to 8,6 5,9 to 27,6	10 to 40 30 to 125 85 to 400	14A6768X012 14A6626X012 14A6628X012	Yellow Green Red	1,5 2,1 6,2	22 30 90	2,8 8,6 27,6	40 125 400	0,14 0,21 - - - -	2 3 - - - -	1,4 4,1 - - - -	20 60 - - - -
80	3	0,69 to 2,8 2,1 to 8,6 5,9 to 27,6	10 to 40 30 to 125 85 to 400	14A6771X012 14A6629X012 14A6631X012	Yellow Green Red	1,3 1,7 4,1	19 25 60	2,8 8,6 27,6	40 125 400	0,17 0,28 - - - -	2.5 4 - - - -	1,4 4,1 - - - -	20 60 - - - -
100	4	0,69 to 2,8 2,1 to 8,6 5,9 to 27,6	10 to 40 30 to 125 85 to 400	14A6770X012 14A6632X012 14A6634X012	Yellow Green Red	1,1 1,4 3,8	16 20 55	2,8 8,6 27,6	40 125 400	0,24 0,34 - - - -	3.5 5 - - - -	1,4 4,1 - - - -	20 60 - - - -
150, 200 x 150	6, 8 x 6	0,69 to 2,8 2,1 to 8,6 5,9 to 27,6	10 to 40 30 to 125 85 to 400	15A2253X012 14A9686X012 15A2615X012	Yellow Green Red	1,1 1,4 3,8	16 20 55	2,8 8,6 27,6	40 125 400	0,41 0,66 - - - -	6 9.5 - - - -	1,4 4,1 - - - -	20 60 - - - -

Parts List

Main Valve

Key	Description
1	Valve Body
2	Body Flange
3	Cap Screw
3	Stud Bolt
4	Gasket
5	Indicator Fitting
6	O-ring Retainer
7	Stem O-ring
8	Hex Nut
9	Spring
10	Indicator Stem
11	Cage
12	Port Seal
13	Seat Ring
14	Piston Ring
15	Upper Seal
16	Valve Plug
17	Cage O-ring
18	Indicator Scale
19	Indicator Protector
20	Plug O-ring
21	Flange O-ring
22	Flange Nut
24	Drive Screw
25	Flow Arrow
26	Nameplate
27	Flange Plug
28	Spring Seat
29	Hex Nut
31	Pipe Plug

6358 Series Pilot

Key	Description
1	Body
2	Spring Case
3	Body Plug
4	Valve Plug Assembly
5	Diaphragm Assembly
6	Connector Cap
7	Control Spring

6358 Series Pilot (continued)

Key	Description
8	Spring Seat
9	Stem Guide
10	Adjusting Screw
11	Locknut
12	Closing Cap
13	Body Plug O-ring
13	Body Plug Gasket
14	Valve Plug Spring
15	O-ring
16	Vent Assembly
17	Machine Screw
18	Connector Cap O-ring
19	Closing Cap Gasket
20	Restriction Plug
20	Restriction
36	Connector Cap O-ring or Gasket
37	Stem O-ring
38	Lower Spring Seat
40	Diaphragm Limiter for Type 6358EB

Type 1098 Actuators

Key	Description
1	Lower Diaphragm Case
2	Upper Diaphragm Case
3	Bonnet
4	Cap Screw
5	Case O-ring
6	Stem O-ring
7	Diaphragm
8	Diaphragm Plate
9	Stem Cap Screw
10	Cap Screw
11	Hex Nut
12	Stem
13	Nameplate
28	Grease Fitting
56	Bearing
57	Wiper Ring

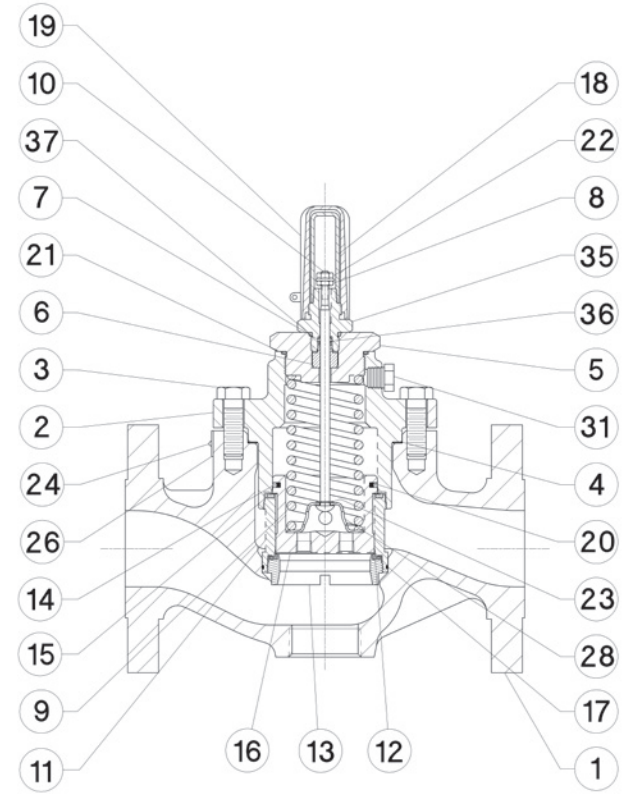

COMPLETE CAST IRON MAIN VALVE ASSEMBLY

35A3167_E

Figure 1. *Type 63EGR Main Valve with Travel Indicator Assembly*

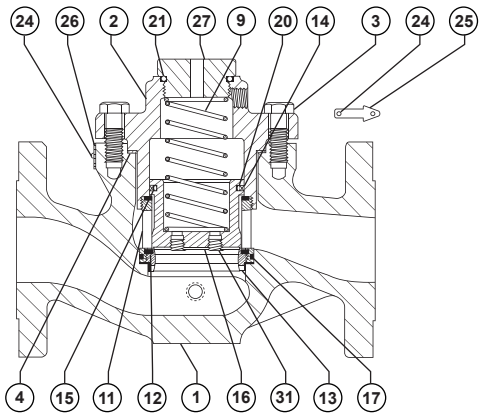

COMPLETE CAST IRON MAIN VALVE ASSEMBLY

35A3174_A

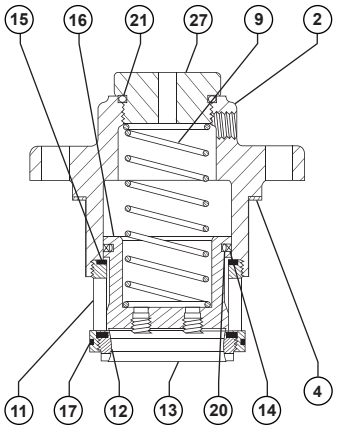

QUICK-CHANGE TRIM PACKAGE ASSEMBLY

25A3169_B

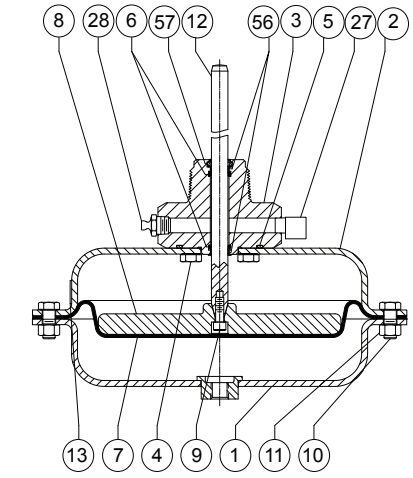

34A5692_C

Figure 2. *Type 63EG Main Valve without Travel Indicator Assembly*

Figure 3. *Type 1098 Actuator Assembly*

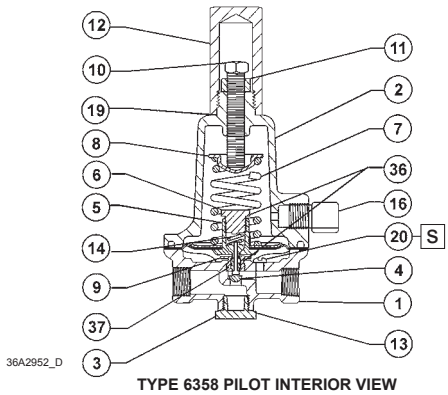

TYPE 6358 PILOT INTERIOR VIEW

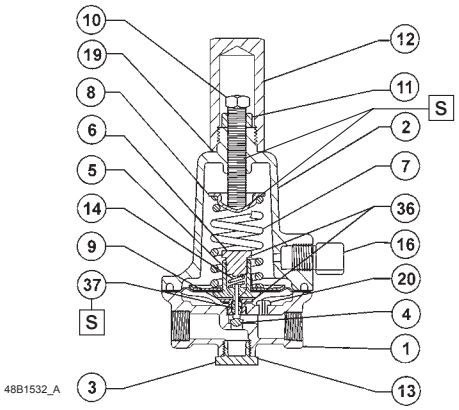

TYPE 6358B PILOT INTERIOR VIEW

☐ APPLY SEALANT (S)

Figure 4. *Types 6358 and 6358B Pilots Assemblies*

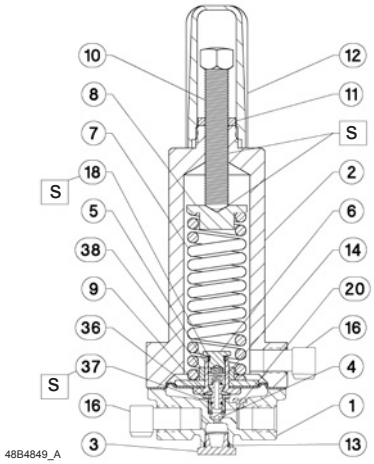

TYPE 6358EB PILOT INTERIOR VIEW

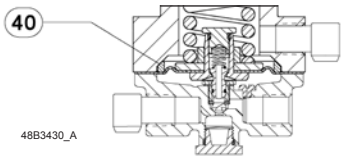

TYPE 6358EB PILOT WITH DIAPHRAGM LIMITER FOR 12,4 to 24,1 bar / 180 TO 350 PSIG SET PRESSURE RANGE INTERIOR VIEW

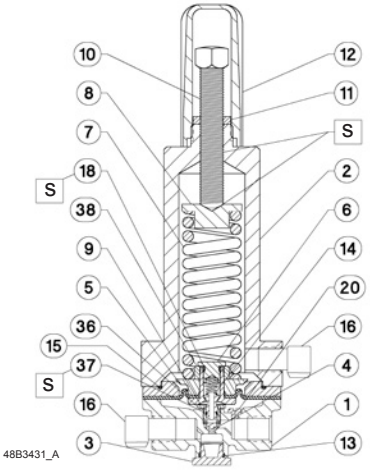

TYPE 6358EBH PILOT INTERIOR VIEW

☐ APPLY SEALANT (S)

Figure 5. *Types 6358EB and 6358EBH Pilots Assemblies*

Industrial Regulators

Emerson Process Management
Regulator Technologies, Inc.

USA - Headquarters
McKinney, Texas 75069-1872, USA
Tel: +1 800 558 5853
Outside U.S. +1 972 548 3574

Asia-Pacific
Shanghai 201206, China
Tel: +86 21 2892 9000

Europe
Bologna 40013, Italy
Tel: +39 051 419 0611

Middle East and Africa
Dubai, United Arab Emirates
Tel: +971 4811 8100

Natural Gas Technologies

Emerson Process Management
Regulator Technologies, Inc.

USA - Headquarters
McKinney, Texas 75069-1872, USA
Tel: +1 800 558 5853
Outside U.S. +1 972 548 3574

Asia-Pacific
Singapore 128461, Singapore
Tel: +65 6770 8337

Europe
Bologna 40013, Italy
Tel: +39 051 419 0611
Gallardon 28320, France
Tel: +33 2 37 33 47 00

TESCOM

Emerson Process Management
Tescom Corporation

USA - Headquarters
Elk River, Minnesota 55330-2445, USA
Tels: +1 763 241 3238
+1 800 447 1250

Europe
Selmsdorf 23923, Germany
Tel: +49 38823 31 287

Asia-Pacific
Shanghai 201206, China
Tel: +86 21 2892 9499

For further information visit www.fisherregulators.com

The Emerson logo is a trademark and service mark of Emerson Electric Co. All other marks are the property of their prospective owners. Fisher is a mark owned by Fisher Controls, Inc., a business of Emerson Process Management.

The contents of this publication are presented for informational purposes only, and while every effort has been made to ensure their accuracy, they are not to be construed as warranties or guarantees, express or implied, regarding the products or services described herein or their use or applicability. We reserve the right to modify or improve the designs or specifications of such products at any time without notice.

Emerson Process Management does not assume responsibility for the selection, use or maintenance of any product. Responsibility for proper selection, use and maintenance of any Emerson Process Management product remains solely with the purchaser.

©Emerson Process Management Regulator Technologies, Inc., 2002, 2011; All Rights Reserved

EMERSON
Process Management