Fisher® 2506 and 2516 Receiver/Controllers

Contents

Introduction 2
Scope of Manual 2
Description 2
Specifications 2
Educational Services 4
Installation 5
Mounting the Controller 5
Actuator Yoke Mounting 6
Wall Mounting 6
Actuator Diaphragm Case Mounting 7
Pipestand Mounting 8
2500 Controller/Transmitter and 2506/2516 Receiver/Controller Mounting . 9
Connections 11
Supply Connection 12
Output Connections 12
Instrument Connection 12
Vents 12
Remote Set Point Connection 13
Startup 13
Adjustments 14
Set Point Adjustment 14
Remote Set Point Adjustment 15
Proportional Band Adjustment 15
Reset Adjustment (2516 Receiver/Controller Only) 15
Anti-Reset Windup Valve Adjustment (2516F Receiver/Controller Only) 15
Calibration 16
Principle of Operation 17
2506 Receiver/Controllers 17
2516, 2516F Receiver/Controllers 18
Maintenance 19
Changing Controller Action 19
Troubleshooting 20
Testing Relay Deadband 21
Replacing Receiver/Controller Parts 21
Bellows Replacement 21
Changing the Relay 22
Changing Proportional or Reset Valve 22
Parts Ordering 22
Parts Kits 23
Parts List 23
Receiver/Controller Common Parts 23
Anti-Reset Windup Valve for 2516F Only 26
2516F Reset and Anti-Reset Windup Valve Assembly 26
Mounting Parts 27
Yoke Mounting 27
Wall Mounting 27
Case Mounting 27
Pipestand Mounting 27
2500 Controller/Transmitter and 2506/2516 Receiver/Controller Mounting 27

Figure 1. Fisher 2506 Receiver-Controller

Figure 2. Fisher 2516 Receiver-Controller

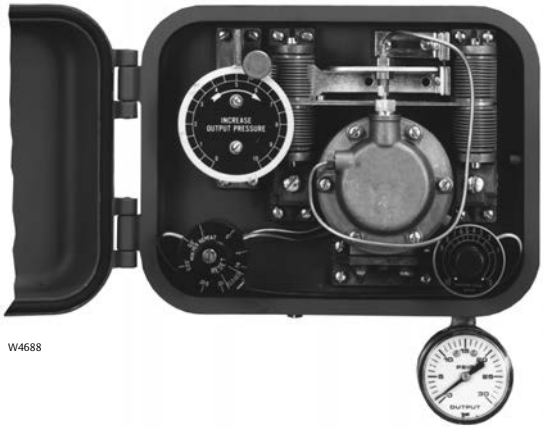

Introduction

Scope of Manual

This manual provides installation, startup, calibration, maintenance, and parts ordering information for 2506 and 2516 receiver/controllers. Figure 1 shows a 2506 receiver/controller. Figure 2 shows a 2516 receiver/controller.

A 2506/2516 receiver/controller is often used with a 2502 controller/transmitter. For information about 2502 controller/transmitters or associated equipment such as pressure regulators, sensors, accessories, or related control devices, see the appropriate instruction manual, or contact your Emerson Process Management sales office.

Do not install, operate, or maintain a 2506/2516 receiver/controller without being fully trained and qualified in valve, actuator, and accessory installation, operation, and maintenance. **To avoid personal injury or property damage, it is important to carefully read, understand, and follow all contents of this quick start guide, including all safety cautions and warnings.** If you have any questions about these instructions, contact your Emerson Process Management sales office before proceeding.

Description

See table 2.

The receiver/controllers described in this manual provide:

- Proportional-only control: 2506 (with snap action: 2506S)
- Proportional-plus-reset control (2516)
- Proportional-plus-reset-plus-anti-reset windup control (2516F)

See figures 9, 10, and 11.

The receiver/controller takes a pneumatic input signal from either a 2500 controller/transmitter or a control device. The unit then provides a pneumatic output signal that operates a final control element.

When a 2506 receiver/controller is used to provide proportional-only control, the pneumatic output signal from the unit can also be piped to a remote receiving indicator or recording device. This provides a visual indication of receiver/controller action.

The INCREASE OUTPUT PRESSURE adjustment is used to increase or decrease the output pressure in relationship to the input pressure. Changing this adjustment changes the position of the nozzle in relationship to the beam/flapper assembly. In turn, the amount of supply pressure released by the relay is changed and the pneumatic output signal that operates a final control element is affected.

If a remote set point signal is used, it is piped to the remote set point connection and into remote set point bellows. The remote signal expands the bellows and moves the beam/flapper assembly. This affects the controller output in the same way a change in the INCREASE OUTPUT PRESSURE adjustment affects the output.

Specifications

Specifications are shown in table 1.

Table 1. Specifications

Available Configurations

For additional information, refer to table 2

2506: A receiver/controller[1] that is set for either proportional or snap action (S) control or for either direct or reverse (R) action
2516: A 2506 that also provides proportional-plus-reset control
2516F: A 2516 that also provides anti-reset windup control

Input Signal Range

From a transmitter or control device, a signal of 0.2 to 1.0 bar (3 to 15 psig) or 0.4 to 2.0 bar (6 to 30 psig) is required depending on receiver/controller range

Refer to the receiver/controller nameplate for specific range.

Output Signal Range[2]

See table 3

Output Action

Direct Action: An increasing fluid, interface level, or density increases output pressure or,

Reverse Action: An increasing fluid, interface level, or density decreases output pressure

Remote Set Point Signal Range

From a control device, provide a remote set point signal that is 0.2 to 1.0 bar (3 to 15 psig) or 0.4 to 2.0 bar (6 to 30 psig) that matches the receiver/controller input signal range

Supply Pressure[3]

Normal Operating Pressure: See table 3

Maximum Pressure to Prevent Internal Part Rupture: 3.4 bar (50 psig)

Supply Medium

Air or Natural Gas

Supply medium must be clean, dry, and noncorrosive

Per ISA Standard 7.0.01
A maximum 40 micrometer particle size in the air system is acceptable. Further filtration down to 5 micrometer particle size is recommended. Lubricant content is not to exceed 1 ppm weight (w/w) or volume (v/v) basis. Condensation in the air supply should be minimized
Per ISO 8573-1
Maximum particle density size: Class 7
Oil content: Class 3
Pressure Dew Point: Class 3 or at least 10°C less than the lowest ambient temperature expected

Steady State Air Consumption[2]

See table 3

Proportional Band Reset, and Anti-Reset Windup

See table 2 and the Changing Controller Action procedure

Performance

Hysteresis: 0.6 percent of output pressure change at 100 percent of proportional band for 2506 proportional receiver/controllers only

Standard Supply and Output Pressure Gauge Indications

See table 3

Standard Tubing Connections

All connections are 1/4 NPT internal

Hazardous Area Classification

2506 receiver/controllers comply with the requirements of ATEX Group II Category 2 Gas and Dust

CE Ex II 2 G D

Operative Ambient Temperature Limits[3]

Standard: -40 to 71°C (-40 to 160°F)

High Temperature: -18 to 104°C (0 to 220°F)

-continued-

Table 1. Specifications (continued)

Approximate Weight

4.54 kg (10 Pounds)

Declaration of SEP

Fisher Controls International LLC declares this product to be in compliance with Article 3 paragraph 3 of the Pressure Equipment Directive (PED) 97 / 23 / EC. It was designed and manufactured in accordance with Sound Engineering Practice (SEP) and cannot bear the CE marking related to PED compliance.

However, the product *may* bear the CE marking to indicate compliance with *other* applicable EC Directives.

NOTE: Specialized instrument terms are defined in ANSI/ISA Standard 51.1 - Process Instrument Terminology.
1. Receiver/controllers are field adjustable between direct or reverse action. If the receiver/controller is set for reverse action at the factory, an R suffix will appear in the type number. Receiver/controllers are field-adjustable between proportional and snap action. If the receiver/controller is set for snap action at the factory, an S suffix appears in the type number.
2. Normal m^3/hr at 0°C, 1.01325 bar absolute (Scfh at 60°F, 14.7 psia).
3. The pressure/temperature limits in this document, and any applicable standard or code limitation should not be exceeded.

Table 2. Additional Information

Control Mode(1)	Action (Full Output Change)	Output Signal
Proportional control (2506)	Proportional Band: Adjustable from 0 to 100% of transmitter signal.	0.2 to 1.0 bar (3 to 15 psig) or 0.4 to 2.0 bar (6 to 30 psig)
Snap action control (2506S)	Snap Action: Control output is at 0 or 100% of input supply pressure. Switching depends on position of sensor and is adjustable.	0 to 1.4 bar (0 to 20 psig) or 0 to 2.4 bar (0 to 35 psig)
Proportional-plus-reset control (2516)	Proportional Band: Adjustable from 0 to 200% of transmitter signal. Recommended setting is from 20 to 200%. Reset: Adjustable form 0.01 to 74 minute per repeat with standard reset valve setting.	0.2 to 1.0 bar (3 to 15 psig) or 0.4 to 2.0 bar (6 to 30 psig)
Proportional-plus-reset with differential relief control (2516F)	Proportional Band: Adjustable from 0 to 200% of transmitter signal. Recommended setting is from 20 to 200%. Reset: Adjustable from 0.01 to 74 minute per repeat with standard reset valve setting. Differential Relief: Provides relief when output pressure falls or when output pressure rises depending on valve adjustment.	

1. Proportional control is continuously active between 0 and 100 percent of the transmitter signal span. Differential gap provides snap action between 0 and 100 percent of the transmitter signal. Do not use reset controllers in snap action.

Table 3. Supply Pressure Data

OUTPUT SIGNAL RANGE	STANDARD SUPPLY AND OUTPUT PRESSURE GAUGE INDICATIONS(1)	NORMAL OPERATING SUPPLY PRESSURE(2)		AIR CONSUMPTION AT NORMAL OPERATING SUPPLY PRESSURE	
		Bar	Psig	Minimum(3)	Maximum(4)
0.2 to 1.0 bar (3 to 15 psig)	0 to 30 psig	1.4	20	4.2 scfh(5)	27 scfh(5)
0.4 to 2.0 bar (6 to 30 psig)	0 to 60 psig	2.4	35	7 scfh(5)	42 scfh(5)

1. Consult your Emerson Process Management sales office for gauges calibrated in other units of measurement.
2. Control and stability may be impaired if this pressure is exceeded.
3. At zero or maximum proportional band or span setting.
4. At setting in middle of proportional band or span range.
5. If air consumption is desired in normal m^3/hr at 0°C and 1.01325 bar, multiply scfh by 0.0268.

Educational Services

For information on available courses for 2506 or 2516 receiver/controllers as well as a variety of other products, contact:

Emerson Process Management
Educational Services - Registration
Phone: +1-641-754-3771 or +1-800-338-8158
e-mail: education@emerson.com
http://www.emersonprocess.com/education

Installation

⚠ WARNING

To avoid personal injury or property damage resulting from the sudden release of pressure:

- **Always wear protective clothing, gloves, and eyewear when performing any installation procedures to avoid personal injury.**
- **Check with your process or safety engineer for any additional measures that must be taken to protect against process media.**
- **If installing into an existing application, also refer to the WARNING at the beginning of the Maintenance section in this instruction manual.**

Mounting the Controller

Note

If a separate receiver/controller unit has been ordered for field installation with an existing valve/actuator assembly or 2500 controller/transmitter, additional mounting parts may be required. Find the mounting description in the parts list at the end of this manual. Then, order any additional parts.

Figures 3 through 8 show dimensions and connection locations used when you install a receiver/controller.

Figure 3. Dimensions and Location of Connections

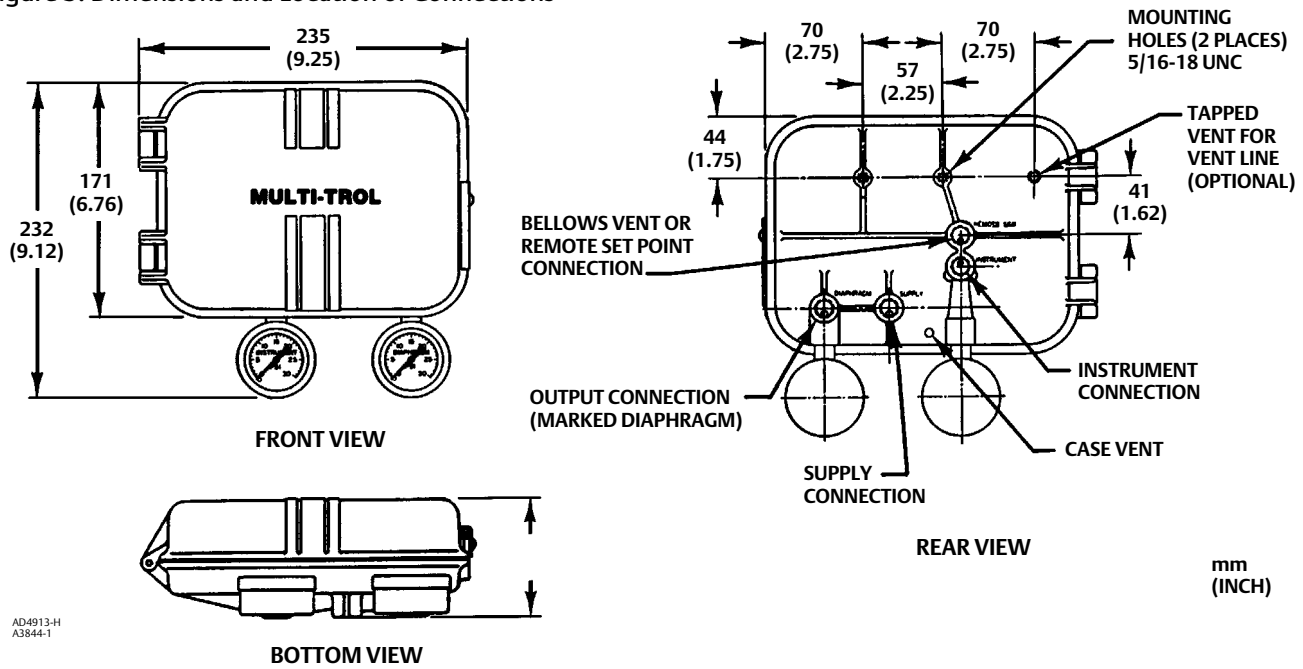

Actuator Yoke Mounting

See figure 4 for a typical mounting plate. Key numbers are shown in figure 5.

1. Locate the mounting plate (key 164, figure 5). Select appropriate mounting holes in the mounting plate for the receiver/controller. Then, align the mounting holes in the mounting plate with the mounting holes in the receiver/controller case.
2. Place the two cap screws (key 48) through the mounting plate from “back to front”. Engage the cap screw threads in the mounting holes in the receiver/controller case and tighten the cap screws to attach the mounting plate to the back of the receiver/controller.
3. Place cap screws (key 39) through the yoke mounting holes in the mounting plate from “front to back”. Place a spacer (key 174) over the threads of the cap screws extending from the mounting plate to properly separate the mounting plate and the lower yoke boss of the actuator (figure 5).
4. Attach the mounting plate with receiver/controller to the lower yoke boss of the actuator yoke. Be sure the spacers support the mounting plate. Be sure the receiver/controller is parallel with the actuator yoke and then tighten the cap screws into the yoke boss.
5. If supply pressure is piped through a filter/regulator, bolt the regulator directly to the upper yoke boss using the cap screws (key 85). Provide appropriate piping from the filter/regulator output connection to the receiver/controller supply connection.

Figure 4. Mounting Plate for Yoke Mounting, Wall Mounting

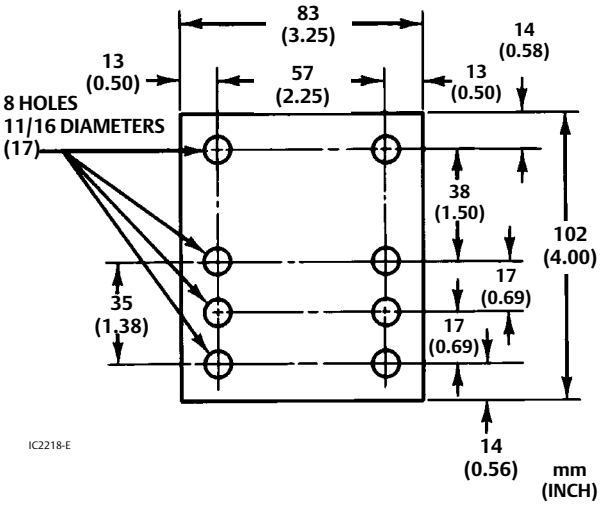

Figure 5. Yoke Mounting

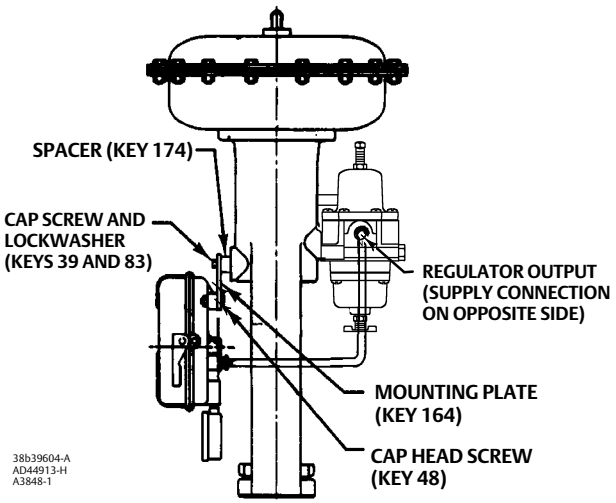

Wall Mounting

See figure 6 for key number locations. The mounting plate is shown in figure 4.

Figure 6. Wall Mounting

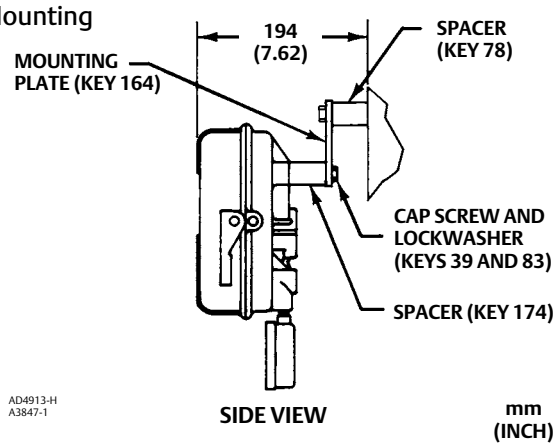

1. Install lock washers (key 83) on the cap screws (key 39). Then, insert the cap screws through the mounting plate from “back to front”. Place a spacer (key 174) over the threads of each cap screw as it extends from the mounting plate. The spacers are required to properly separate the receiver/controller from the mounting plate. Then, thread the cap screws into the mounting holes in the receiver/controller case and tighten.
2. Install lock washers (key 83) on the cap screws (key 48). Then, insert the cap screws through the mounting plate from “front to back”. Place a spacer (key 174) over the threads of each cap screw as it extends from the mounting plate. The spacers are required to properly separate the mounting plate from the wall mounting position. Then, thread the cap screws into holes prepared at the wall mounting position and tighten.
3. Provide appropriate piping from the filter/regulator output connection to the receiver/controller supply connection.

Actuator Diaphragm Case Mounting

To mount a receiver/controller to the diaphragm casing of a standard diaphragm actuator, remove two hex nuts and hex head cap screws securing the upper and lower diaphragm casings. If necessary, refer to the appropriate actuator instruction manual to locate the hex head cap screws and nuts.

See figure 7 for key number locations.

Figure 7. Case Mounting

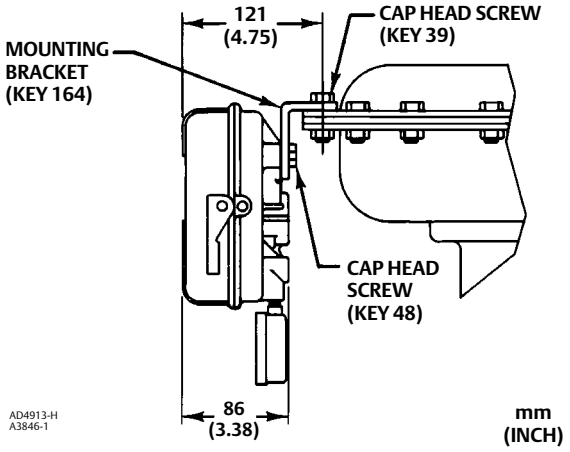

1. Locate the receiver/controller mounting holes in mounting bracket (key 164, figure 7).
2. Place the two cap screws (key 48) through the receiver/controller mounting plate holes from “back to front". Engage the threads in the receiver/controller mounting holes and tighten the cap screws to attach the mounting plate to the back of the receiver/controller.
3. Locate the receiver/controller mounting position on the horizontal edge of the diaphragm case. A typical Fisher diaphragm actuator features upper and lower diaphragm casings held together with hex head cap screws and hex nuts. Remove the hex nuts from two hex head cap screws joining the upper and lower casing. Then, remove the cap screws.
4. Engage the cap screw threads in the mounting holes in the receiver/controller case and tighten the cap screws to attach the mounting plate to the back of the receiver/controller.
5. Place the mounting bracket over the empty casing holes. Insert the casing cap screws through the mounting bracket, upper casing, and lower casing. Add the nuts and tighten to secure the mounting bracket with receiver/controller to the casing.
6. If supply pressure is piped through a filter/regulator, the regulator may be attached in one of two locations:
   - Attach the regulator directly to the upper yoke boss using the cap screws (key 85) for yoke mounting.
   - Attach the regulator to the casing using a mounting bracket (key 177). The mounting bracket for the regulator is the same as the mounting bracket for the receiver/controller. Follow steps 1 through 4 to mount the regulator.
7. Connect the filter/regulator output connection to the receiver/controller supply connection.

Pipestand Mounting

See figure 8 for key number locations.

Figure 8. Pipestand Mounting

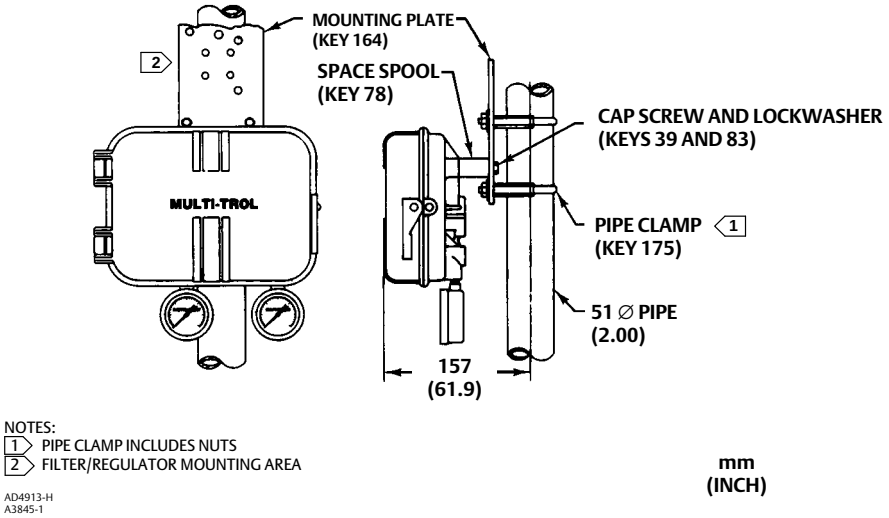

1. Locate the mounting plate (key 164). Select appropriate mounting holes in the mounting plate for the receiver/controller. Then, align the mounting holes in the mounting plate with the mounting holes in the receiver/controller case.
2. Place the two cap screws (key 48) through the mounting plate from “back to front”. Place a spacer (key 174) over the threads of each cap screw as it extends from the mounting plate. The spacers are required to properly separate the receiver/controller from the mounting plate.

3. Attach the mounting plate with receiver/controller to a 2-inch (nominal) pipe with pipe clamps (key 175). Each pipe clamp includes two nuts. Tighten clamp nuts.
4. If supply pressure is piped through a filter/regulator, the regulator may be attached to the mounting plate using cap screws (key 85), lock washers (key 84), and hex nuts (key 40).
5. Provide appropriate piping from the filter/regulator output connection to the receiver/controller supply connection.

2500 Controller/Transmitter and 2506/2516 Receiver/Controller Mounting

If the controller/transmitter and receiver/controller are ordered simultaneously, the factory will mount them together before shipment (figure 9). For examples of typical transmitter/receiver mounting arrangements, see figures 10 and 11.

If the receiver/controller is ordered separately for use with a 2500 controller/transmitter, it may not have the required mounting parts. If mounting parts are required, consult the parts list under the specific mounting application.

See figure 9 for key number locations.

Figure 9. Fisher 2500 Controller-Transmitter and 2506/2516 Receiver-Controller Mounting

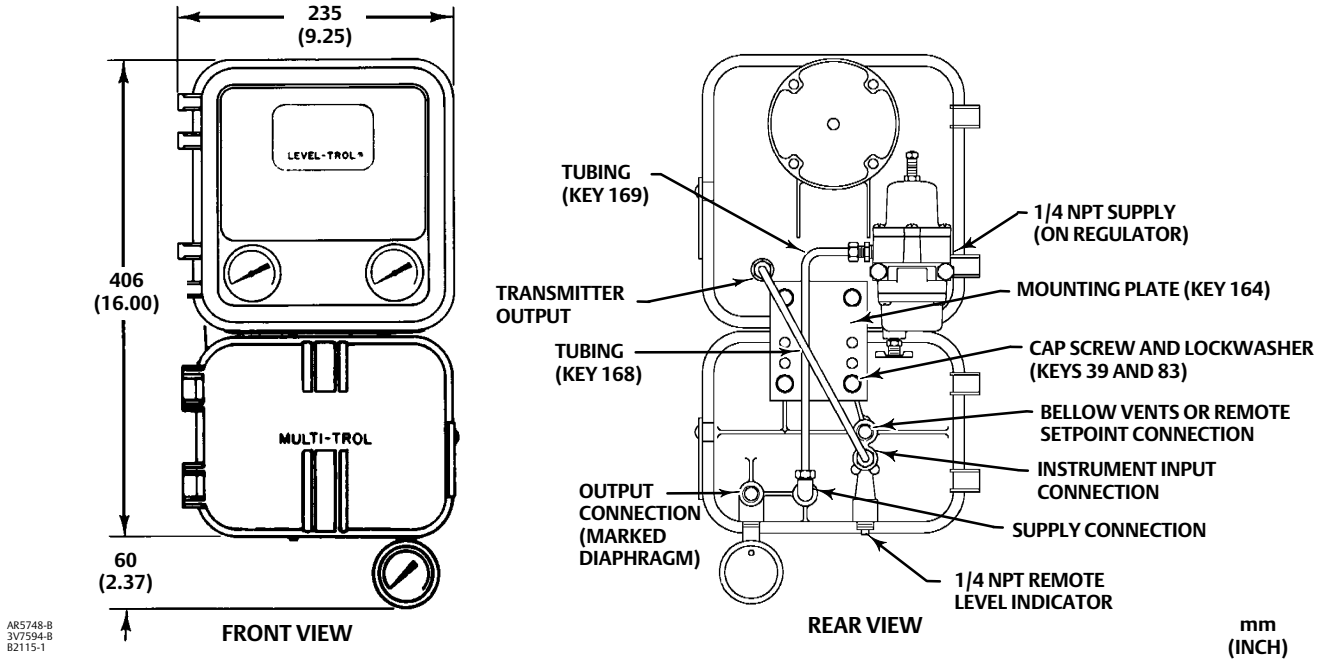

1. Install lock washers (key 83) on the cap screws (key 39). Then, insert the cap screws through the mounting plate from “back to front”. Thread the cap screws into the mounting holes in the receiver/controller case and tighten.

2. Install lock washers (key 83) on the cap screws (key 48). Then, insert the cap screws through the mounting plate from “back to front”. Thread the cap screws into the mounting holes in the controller/transmitter.
3. If supply pressure is piped through a filter/regulator, bolt the regulator to the back of the controller/transmitter.
4. Provide appropriate piping connections between the units as shown in figures 10 or 11.

Figure 10. Typical Transmitter with Receiver and Control Valve Installation Assembly

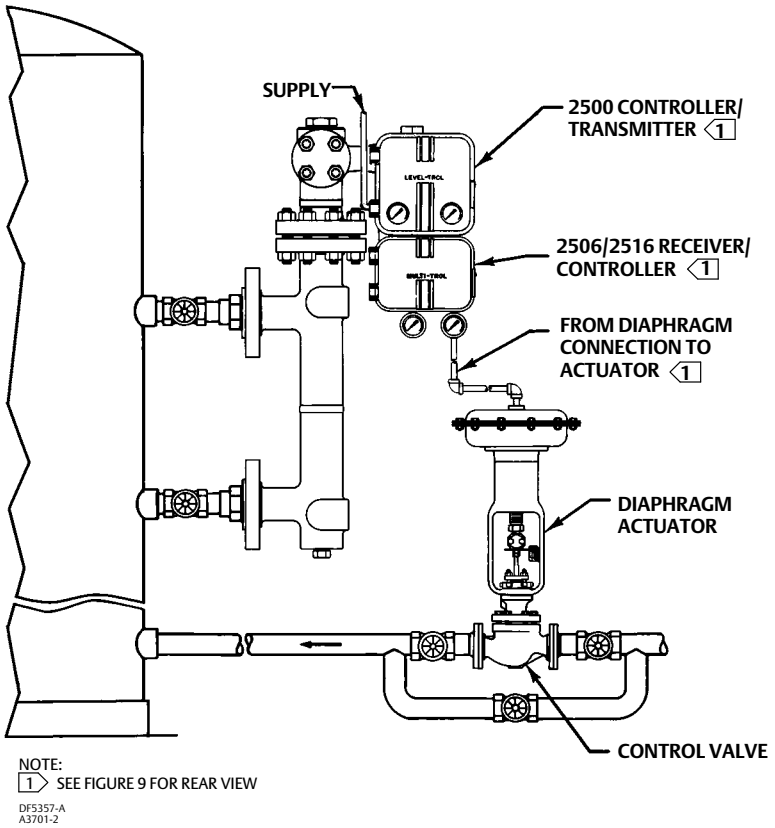

Figure 11. Typical Transmitter and Receiver Installation with an Indicator and Remote Set Point Connection

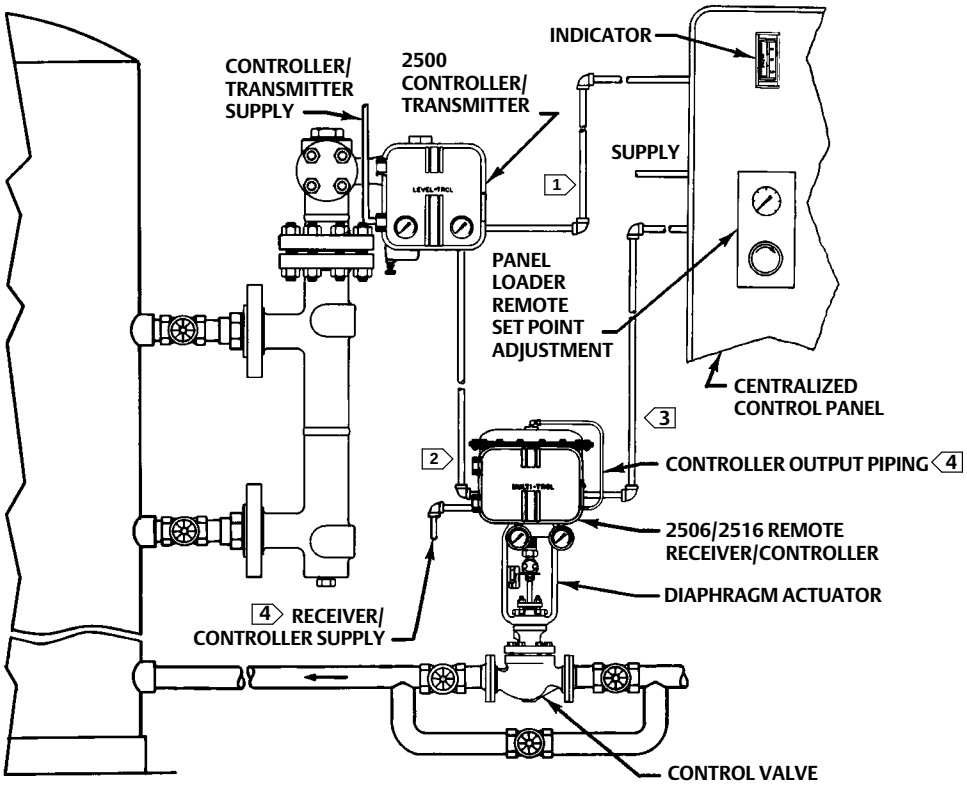

NOTES:
1 PIPING FROM TRANSMITTER OUTPUT TO PANEL INDICATOR
2 PIPING FROM TRANSMITTER OUTPUT TO PANEL RECEIVER/CONTROLLER INSTRUMENT INPUT. SEE FIGURE 3 FOR CONNECTION LOCATION
3 PIPING FROM PANEL LOADER TO RECEIVER/CONTROLLER REMOTE SET POINT CONNECTION. SEE FIGURE 3 FOR CONNECTION LOCATION.
4 SEE FIGURE 3 FOR CONNECTION LOCATION.

DF5379-A
A3702-2

Connections

⚠ WARNING

The controller is capable of providing full supply pressure to connected equipment. To avoid personal injury or property damage caused by parts bursting from system overpressure, make sure the supply pressure never exceeds the maximum safe working pressure of any connected equipment.

To complete the installation of a receiver/controller, make connections with tubing and fittings between the receiver/controller and the actuator. The fittings, tubing, and mounting parts required depend on the type number and optional equipment such as filter, regulator, and bypass valve.

All pressure connections on 2506/2516 receiver/controllers are 1/4 NPT internal fittings (figures 3 and 9). Use 1/4-inch piping or 3/8-inch tubing to these connections.

If remote venting is required, see the Vents subsection below.

Supply Connection

⚠ WARNING

Severe personal injury or property damage may occur if the instrument air supply is not clean, dry and oil free or non-corrosive gas. While use and regular maintenance of a filter that remove particles larger than 40 micrometers in diameter will suffice in most applications, check with an Emerson Process Management field office and industry instrument air quality standards for use with corrosive gas or if you are unsure about the proper amount or method of air filtration or filter maintenance.

If the existing supply is corrosive, make sure the tubing and instrument components that contact the corrosive medium are of suitable corrosion-resistant materials, or change to a noncorrosive supply medium.

⚠ WARNING

Personal injury or property damage may occur from bursting parts due to overpressuring any system component. To avoid injury or damage, provide pressure-relieving or pressure-limiting devices if supply or input pressure could exceed the maximum allowable pressures listed in table 3.

It is recommended that supply pressure pass through a filter/regulator combination such as a Fisher 67CFR. See table 3 for recommended supply pressures to the receiver/controller.

Typical supply pressure for the 67CFR is clean dry air or a gas at a pressure of 2.5 bar (35 psig) to a maximum of 17 bar (250 psig). For specific regulator limits, see the appropriate regulator instruction manual.

Output Connections

See figure 3.

Use 3/8-inch tubing between the actuator and the receiver/controller. Connect the output (diaphragm) connection to the appropriate actuator connection.

Instrument Connection

See figure 3.

Use 3/8-inch tubing to connect the output from the control device to the INSTRUMENT connection on the receiver/controller.

Vents

⚠ WARNING

If a flammable or hazardous gas is used as supply pressure medium, personal injury or property damage could result from fire or explosion caused by the accumulated gas. Injury or property damage could also result from contact with flammable or hazardous gas. The case and cover assembly does not form a gas-tight seal and flammable or hazardous gas could leak from this unit. Therefore, if the receiver/controller unit is enclosed, install a remote vent line to remove part of the exhaust gas to a properly ventilated area. However, a remote vent line cannot be relied upon to remove all hazardous gas. Vent line piping should comply with local and regional codes and should be as short as possible. Select vent line piping with adequate inside diameter and install with few bends to reduce case pressure buildup.

See figure 3 for vent locations.

A receiver/controller may be ordered with one of two vent configurations:

- Standard, with 1/4-inch case vent open. The standard receiver/controller case (key 1) is **not** drilled and tapped for the optional tapped vent.
- Optional, with tapped vent, for applications requiring vent line attachment to receiver/controller case. The optional receiver/controller case features a tapped vent for applications requiring a remote vent line. The standard case vent should be sealed with a machine screw.

  An air vent plug (key 137) with gasket (key 138) and hex nut (key 139) can be added to the tapped vent. The air vent plug provides a 1/4 NPT internal fitting.
- Receiver/controllers feature an open bellows vent/remote set point connection. An external vent assembly (key 128) is recommended if the remote set point connection is not made. The external vent assembly can be driven into the open bellows vent.

Protect all vents against the entrance of any foreign material that could plug them. Check the vents periodically to be certain they are not plugged.

Remote Set Point Connection

⚠ WARNING

Severe personal injury or property damage may occur if the instrument air supply is not clean, dry and oil free or non-corrosive gas. While use and regular maintenance of a filter that remove particles larger than 40 micrometers in diameter will suffice in most applications, check with an Emerson Process Management field office and industry instrument air quality standards for use with corrosive gas or if you are unsure about the proper amount or method of air filtration or filter maintenance.

See figure 3.

The remote set point connection is made at the tapped bellows vent/remote set point connection on the rear of the receiver/controller case. A vent assembly (key 128) is recommended if the remote set point connection is not made.

To make a remote set point connection, remove the vent assembly from the connection. Install piping from the remote set point loader or regulator.

When a panel loader or regulator is used for remote set point adjustment, as shown in figure 11, an adjustable output range of 0.2 to 1 bar (3 to 15 psig) or 0.4 to 2 bar (6 to 30) is required to match the receiver/controller output range.

Use clean, dry air or a non-corrosive gas for supply pressure to the remote set point bellows.

Startup

It is important that the output range of the transmitter or other device used as the input to the receiver/controller be adjusted so that its output range corresponds to the input signal range of the receiver/controller. Be sure the receiver/controller action (direct or reverse) is correct for the application.

To start the system:

- **For all receiver/controllers, perform steps 1 and 2.**

1. See table 3 for specific pressure limits. Be sure the correct supply pressure is available. If necessary, adjust the regulator to 1.4 bar (20 psig) for a 0.2 to 1 bar (3 to 15 psig) or 2.4 bar (35 psig) for a 0.4 to 2 bar (6 to 30 psig) receiver/controller range.
2. Turn on the supply pressure to the receiver/controller.

- **To make the proper level or output pressure setting for a 2506 receiver/controller, go to step 3. To make the proper level or output pressure setting for a 2516 receiver/controller, go to step 9.**

- **For the 2506 receiver/controller:**

3. Set the proportional band adjustment at 15 percent (1.5 on the adjustment dial). At this setting, a 0.1 bar (1.8 psig) input pressure causes a 12 psig output pressure change. Operate the receiver/controller with the proportional band setting as small as possible.
4. Provide an input pressure equal to the output pressure of the transmitter at a value desired or halfway between the transmitter output range. For example, on a receiver/controller, if the desired control point is halfway between the ends of the displacer, provide an input of 0.6 bar (9 psig) which is halfway between 0.2 and 1 bar (3 and 15 psig) transmitter output range.
5. Set the output pressure adjustment to give a controller output that is halfway between its output range.
6. Vary the input pressure to be sure the full controller output pressure range is produced within the specified input pressure range.
7. Lock the output pressure adjustment and connect the receiver/controller to the final control element.
8. If the proportional band setting is too narrow, causing instability, widen the proportional band just enough to stabilize control. After making this adjustment, it may be necessary to reset the output pressure slightly to produce the proper control range.

- **For the 2516 receiver/controller:**

9. Set the proportional band adjustment dial at 0 percent (minimum proportional band).
10. Set the reset adjustment to the fastest speed (0.005 minutes-per-repeat).
11. Provide an input pressure equal to the output pressure of the transmitter at a value desired or halfway between the transmitter output range. For example, on a receiver/controller, if the desired control point is halfway between the ends of the displacer, provide an input of 0.6 bar (9 psig) which is halfway between 0.2 and 1 bar (3 and 15 psig) transmitter output range.
12. Adjust the output pressure dial to give a controller output somewhere within the output range of the receiver/controller.
13. Lock the output pressure dial and connect to the final control element.
14. If the proportional band is too narrow causing instability, widen the proportional band or slow the reset just enough to stabilize control.

Adjustments

To adjust the receiver/controller, open the cover and locate the appropriate adjustment. See figures 14, 15, and 16 for the location of adjustments.

Set Point Adjustment

To adjust the level set point, loosen the knurled knob and rotate the knob around the INCREASE OUTPUT PRESSURE or RAISE LEVEL dial. To raise fluid or interface level or increase density, rotate the knob in the direction of the arrow.

To lower level or decrease density, rotate the knob in the opposite direction. The INCREASE OUTPUT PRESSURE or RAISE LEVEL dial is graduated (in percent) to show approximate indications of the receiver/controller set point. When making adjustments, do not rely only on the dial setting. Monitor the process fluid level to be sure the receiver/controller attains the desired set point.

For differential gap receiver/controllers, the level setting adjustment determines the location of the gap within the range of the sensing element.

Remote Set Point Adjustment

On a receiver/controller with remote set point adjustment capability, adjust the set point by changing the pressure to the remote set point connection. Increase the remote set point signal pressure to decrease the receiver/controller set point (for a direct acting receiver/controller) or increase the receiver/controller set point (for a reverse acting receiver/controller).

Proportional Band Adjustment

For proportional and proportional-plus-reset receiver/controllers, the proportional band adjustment determines the amount of change in the input pressure required to change the controller output signal from one limit of the output signal range to the other limit (without the effect of reset action).

Proportional band is expressed as a percent of the sensing element range. That is, with a proportional band of 100 percent, an input pressure change equal to the sensing element span would change the controller output from one limit to the other. With a proportional band of 50 percent, an input pressure change equal to one half the sensing element range would change the controller output from one limit to the other.

The proportional valve dial is graduated from 0 to 10. A setting of 10 on the dial represents a proportional band of 100 percent; 5 represents a proportional band of 50 percent.

The receiver/controller is designed for a maximum proportional band of 200 percent. The effective band is determined by the location of the adjustable nozzle assembly (key 17, figure 14) in the slot in the level set arm (key 28). Most applications require a maximum band of 100 percent so, at the factory, a receiver/controller unit is set to the 100 percent value. This setting places the nozzle at a point that is halfway between the bellows assemblies. To adjust the proportional band, rotate the adjustment counterclockwise to broaden the setting. Rotate the adjustment clockwise to narrow the setting.

In some applications, a 200 percent proportional band range may be required. To obtain the 200 percent range, move the nozzle assembly to the extreme right end of the slot in the level set arm.

For differential gap receiver/controllers, the proportional band adjustment determines the width of the differential gap. This is the difference between the input pressures at which the controller output switches from zero to full supply pressure and back to zero.

Reset Adjustment (2516 Receiver/Controller Only)

On proportional-plus-reset receiver/controllers, the reset adjustment determines the time in minutes required for the reset action to produce a change in output pressure equal to the change that has occurred due to proportional band action.

To adjust the reset action, rotate the adjustment clockwise to decrease, or counterclockwise to increase the minutes per repeat. Increasing the minutes per repeat provides a slower reset action.

Anti-Reset Windup Valve Adjustment (2516F Receiver/Controller Only)

The anti-reset windup valve provides differential pressure relief. Its adjustment control extends from the back of the receiver/controller case (figure 16).

The factory sets this valve to relieve when the differential pressure between the proportional and reset bellows reaches 5 psi. To set the valve to relieve when the differential pressure is as low as 2 psig, turn the adjustment screw clockwise. To set the valve to relieve when the differential pressure is as high as 7 psig, turn the adjustment screw counterclockwise. The minimum differential setting yields the minimum differential set point overshoot during startup.

Depending on the characteristics of the process, the anti-reset windup valve can be positioned so that the arrow on the case points to the letters RE or, to the letter P on the back of the manifold. If the arrow points to P, the valve opens when receiver/controller output pressure rises. If the arrow points to RE, the valve opens when receiver/controller output pressure falls.

Calibration

⚠ WARNING

The following calibration procedures require taking the controller out of service. To avoid personal injury and property damage caused by an uncontrolled process, provide some temporary means of control for the process before taking the receiver/controller out of service. Also refer to the Warning at the beginning of the Maintenance section.

See figure 14 for key number and adjustment locations.

When performing the following calibration procedures, open loop conditions must exist and make provisions to monitor the output pressure. One way to obtain an open loop is to disconnect the controller output signal line and install a pressure gauge.

Note

When calibrating a combined controller arrangement such as the 2500 with the 2506 or 2516 (figure 9), calibrate the 2500 controller/ transmitter first.

For a direct action receiver/controller:

1. Adjust the INCREASE OUTPUT PRESSURE adjustment to mid-range on the scale.
2. Turn the proportional band adjustment to 100 percent of the scale range.
3. For the 2516 only, turn the reset valve adjustment fully clockwise.
4. Adjust the input pressure to 0.6 bar (9 psig) for a 0.2 to 1 bar (3 to 15 psig) or 1.2 bar (18 psig) for a 0.4 to 2 bar (6 to 30 psig) receiver/controller.
5. For the 2516 only, turn the reset valve adjustment fully counterclockwise (to the CLOSED position). This locks 0.6 bar (9 psig) or 1.2 bar (18 psig) in the reset bellows.
6. If the output pressure is 0.6 bar (9 psig) for a 0.2 to 1 bar (3 to 15 psig) or 1.2 bar (18 psig) for a 0.4 to 2 bar (6 to 30 psig) receiver/controller, go to step 8. If not, continue with step 7.
7. If the output pressure span is too low, move the nozzle down towards the flapper, if output pressure is too high, move the nozzle up. Continue by trial and error until the desired setting is obtained.
8. Adjust the input pressure to 1 bar (15 psig) for a 0.2 to 1 bar (3 to 15 psig) or 2 bar (30 psig) for a 0.4 to 2 bar (6 to 30 psig) receiver/controller.

9. The output pressure should be 1 bar (15 psig) for a 0.2 to 1 bar (3 to 15 psig) or 2 bar (30 psig) for a 0.4 to 2 bar (6 to 30 psig) receiver/controller. If output pressure is within application tolerance, proceed to step 12. If not, continue with step 10.
10. If the output pressure span is narrow, move the nozzle slightly to the left or, if the output pressure span is too wide, move it to the right and repeat steps 4 and 6 through 10.
11. Repeat the steps until the receiver/controller is within application requirements.
12. Reconnect the receiver/controller to the control loop and see the Adjustment section.

Principle of Operation

The 2506/2516 uses a basic pressure balance relay system. The relay is connected so that supply pressure is fed to the inlet side of the relay valve and the fixed restriction. From this restriction, the air pressure bleeds into the relay chamber on one side of the large diaphragm and also to the nozzle. As long as there is no pressure change on either diaphragm, the relay valve remains in equilibrium with both inlet and exhaust ends closed. The area ratio of the large diaphragm to the small diaphragm is 3 to 1. A 12 psi pressure change on the small diaphragm is balanced by a 4 psi change in the large diaphragm.

The following descriptions show how the relay works with the standard proportional, proportional-plus-reset, and proportional-plus-reset with anti-reset windup receiver/controllers.

2506 Receiver/Controllers

See figure 12.

Figure 12. Fisher 2506 Direct Action Receiver / Controller Schematic

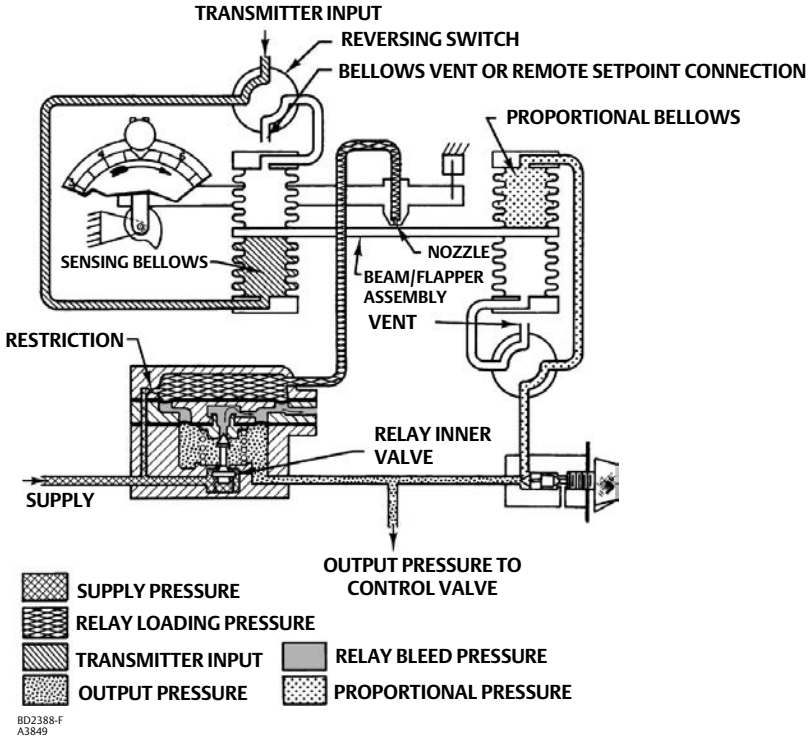

As long as the process level remains constant, the transmitter input pressure to the receiver/controller remains constant. Inside the receiver/controller, the bellows beam/flapper assembly remains in a steady-state position.

The position of the bellows beam allows the supply pressure to bleed through the nozzle as fast as it enters the relay through the fixed restriction. A change in transmitter input pressure repositions the beam/flapper assembly with respect to the nozzle.

On a direct action receiver/controller, an increase in transmitter input pressure causes a pressure increase in the sensing bellows assembly, tending to push the beam toward the nozzle. This restricts the escape of supply pressure through the nozzle, thus increasing the pressure on the large diaphragm in the relay. This opens the relay valve to the supply pressure allowing an increase in output pressure to the control valve.

A decrease in transmitter input pressure decreases the pressure in the input bellows assembly by moving the beam away from the nozzle. This allows the supply pressure to bleed through the nozzle faster than it can enter through the fixed restriction in the relay. The relay valve opens, exhausting the output pressure which vent through the relay exhaust port. This action decreases output pressure to the control valve.

2516, 2516F Receiver/Controllers

The action of a proportional-plus-reset controller (figure 13) is similar to that of a proportional controller except that feedback from the controller output pressure is piped to a reset bellows as well as to the proportional bellows.

Figure 13. Fisher 2516 and 2516F Direct Action Receiver-Controller Schematic

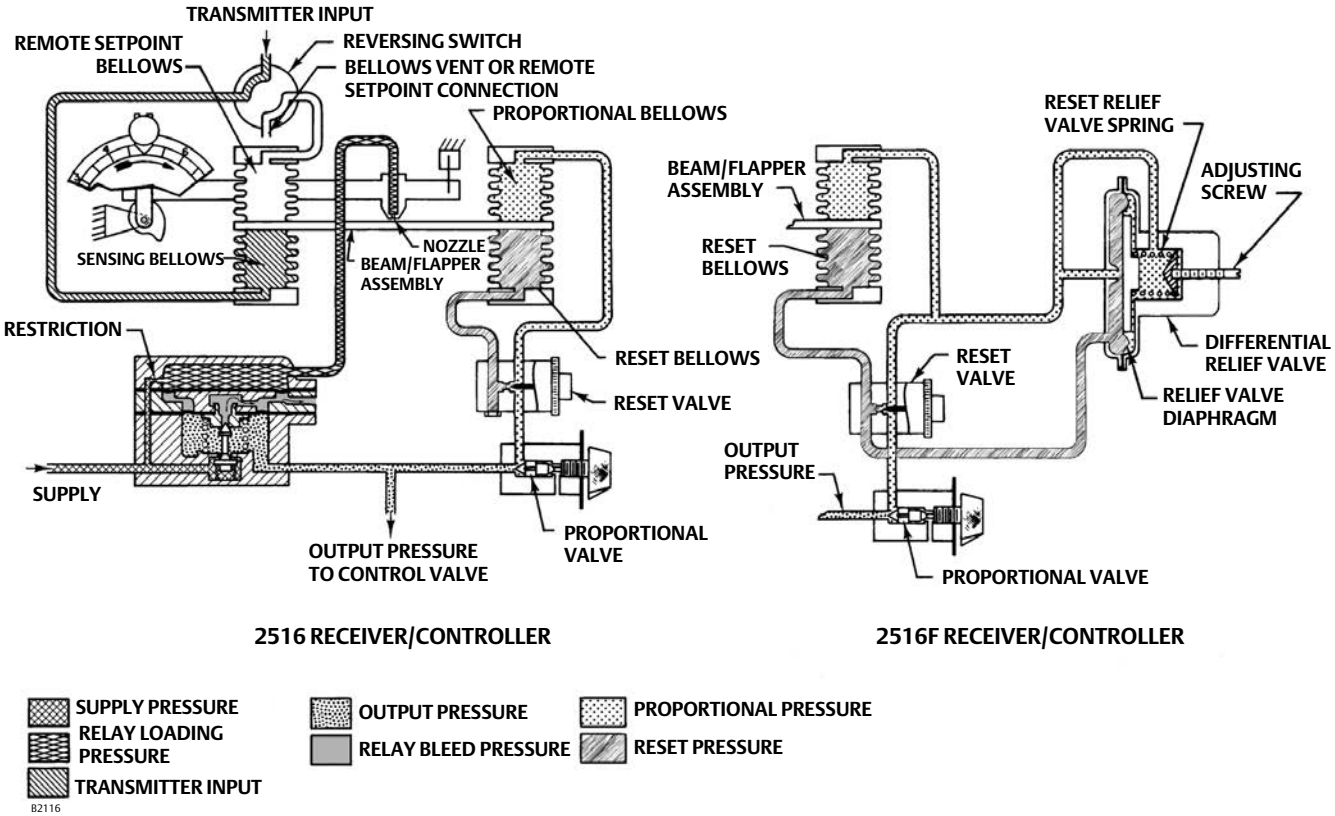

You can adjust the reset valve on the 2516 and 2516F to channel some or all of the proportional pressure into the reset bellows that opposes the proportional bellows action. This arrangement automatically reduces the effect of any proportional overcorrection by a set amount per time interval, as long as there is a deviation from the control point.

The 2516F receiver/controller also features an anti-reset windup valve. This valve provides differential pressure relief to prevent proportional pressure from exceeding reset pressure by more than a set value. The proportional valve output pressure registers on one side of the diaphragm chamber and the reset valve output pressure registers on the other side diaphragm. A sudden increase in the output pressure causes a rapid pressure increase in the proportional bellows and in the proportional side of the diaphragm chamber. If the diaphragm pressure of the relief valve exceeds that of the spring side by the amount of the relief pressure setting, the relief diaphragm moves off the orifice in the differential relief valve. This allows the pressure on the proportional side of the diaphragm to bleed into the reset system. This action provides quick relief of excessive proportional pressure and reduces the time required by the system to return to the control point. A user can reverse the differential relief action to relieve on decrease output pressure.

Maintenance

Receiver/controller parts are subject to normal wear and may require inspection or replacement. The frequency of inspection and parts replacement depends upon the severity of the service conditions. When inspection or repairs are needed, disassemble only those parts necessary to accomplish the job.

Select the appropriate maintenance procedures and perform the appropriate steps. Each procedure requires that supply pressure and process pressure be shut off before beginning maintenance.

Establish a maintenance cycle to regularly clean the vents (figure 3). Also, establish a maintenance cycle to clear the relay orifice (key 88, not shown) by pushing in the plunger of the core assembly (key 89).

⚠ WARNING

The following maintenance procedures require taking the controller out of service. To avoid personal injury and property damage caused by an uncontrolled process:

- **Always wear protective clothing, gloves, and eyewear when performing any maintenance operations to avoid personal injury.**
- **Provide some temporary means of controlling the process before taking the receiver/controller out of service.**
- **Release any trapped pressure from the controller and vent supply pressure before disassembly.**
- **Check with your process or safety engineer for any additional measures that must be taken to protect against process media.**

Changing Controller Action

See figure 14 for key number locations, unless otherwise directed.

Note

Do not switch the 2516 receiver/controller to snap (S) action.

To change controller action, reposition one or both switch plates (key 132), which are mounted on the left or right bellows assemblies (key 134 or 133 respectively). When either switch plate (key 132) is removed, the raised letters D, R, S, and P are visible on the bellows frame located under the switch plate (figure 14).

These letters correspond to: direct (D), reverse (R), snap (S), and proportional (P) control action. To obtain the type of control desired, position the switch plates so that the proper letter appears in the cut-out corner, as explained below:

- The bellows assembly on the left provides either direct or reverse action. The receiver/controller (2506 or 2516) can be changed between direct and reverse action by repositioning the switch plate (key 132) on the left. Direct action (D) is when increasing transmitter input pressure increases receiver/controller output pressure. To obtain direct action, position the switch plate so the D is visible. Reverse action (R) is when decreasing transmitter input pressure increases receiver/controller output pressure. To obtain reverse action, position the switch plate so the R is visible.

- The bellows assembly on the right provides either proportional (P) or snap (S) action depending on the switch plate position. For all types of receiver/controllers, to obtain proportional action, position the switch plate so the P is visible. For 2506 receiver/controllers, to obtain snap action, position the switch plate so the S is visible.

Troubleshooting

As an aid to troubleshooting, see table 4 for a listing of some common operating faults, their probable cause, and suggested procedures for correcting the faults.

Table 4.Troubleshooting Chart

Fault	Possible Cause	Check	Correction
1. Process wanders or cycles around set point. Note: 1.2 is for the 2500 and 2506/16 combination.	1.1 Proportional band or specific gravity adjustment incorrect, or improperly tuned control loop.	1.1 Insure that the prestartup procedures are completed correctly. Tune control loop.	1.1 If stable control cannot be attained, and all other elements are functionally correct, examine other possible causes related to the controller/transmitter.
	1.2 Input signal varying to the 2506/16.	1.2 Use a pressure gauge to monitor input stability.	1.2 Apply stable input pressure source. Tune the 2500 controller/transmitter.
	1.3 Supply pressure varying, or incorrect supply pressure setting.	1.3 Use input pressure gauge to monitor stability. Make sure regulator supply pressure is within limits.	1.3 Apply correct supply pressure. It is recommended to use one regulator per instrument.
	1.4 Relay malfunction.	1.4 Check for relay malfunction by using the testing relay deadband procedure.	1.4 Depress plunger to clean out the fixed restriction. Replace relay using the procedure in the maintenance section.
2. Receiver/controller controlling off set point or switching point.	2.1 Supply pressure not set correctly.	2.1 Make sure regulator supply pressure is set correctly. Make sure regulator supply pressure is within limits.	2.1 Reset the regulator pressure. If the problem recurs, replace or rebuild the regulator. Provide a regulator input pressure within regulator limits.
	2.2 Leak in the receiver/controller loop.	2.2 Use soap and water to check for internal and external leaks.	2.2 Replace or repair leaking parts as necessary.
3. Receiver/controller cannot obtain full output range.	3.1 Supply pressure not set correctly.	3.1 Make sure supply pressure is set correctly. Make sure regulator supply pressure is within limits.	3.1 Reset the regulator pressure. If problem recurs, replace or rebuild the regulator. Provide a regulator input pressure within regulator limits.
	3.2 Nozzle adjustment.	3.2 Insure the nozzle is not loose.	3.2 Perform calibration procedures.
	3.3 Relay malfunction.	3.3 Check for relay malfunction by using the testing relay deadband procedure.	3.3 Depress plunger to clean out the fixed restriction. Replace relay using the procedure in the maintenance section.
	3.4 Leaking controller/transmitter loop.	3.4 Use soap and water to check for internal and external leaks.	3.4 Replace or repair leaking parts as necessary.

-continued-

Table 5.Troubleshooting Chart (continued)

Fault	Possible Cause	Check	Correction
4. Receiver/controller remains at full or zero output pressure.	4.1 Supply or output pressure gauge malfunction.	4.1 Insure the pressure gauges are registering correctly.	4.1 Replace pressure gauges. Use corrective action given for section 3 of this table.
	4.2 Flapper adjustment.	4.2 Insure the flapper is not loose on the torque tube shaft. Insure the flapper is centered on the nozzle.	4.2 Replace or tighten flapper assembly as necessary and/or center flapper on nozzle.
	4.3 Relay malfunction.	4.3 Check for relay malfunction by using the testing relay deadband procedure.	4.3 Depress plunger to clean out the fixed restriction. Replace relay using the procedure in the maintenance section.

Testing Relay Deadband

1. Replace the PROPORTIONAL BAND adjustment assembly with a 1/8 NPT pipe plug according to the sections for changing proportional, reset, or anti-reset windup valves.
2. Turn on the supply pressure and set it to 1.4 bar or 2.4 bar (20 or 35 psig) according to supply pressure requirements of the receiver/controllers.
3. By changing the process variable and adjusting the INCREASE OUTPUT PRESSURE control, set the output pressure to 15 or 30 psig. While monitoring the output pressure, slowly change the process until an output pressure change just begins. Record the value of the process variable at this detection point.
4. Change the process variable in the opposite direction until another output pressure change just begins. Again, record the value of the process variable. If the difference between the two values (the deadband) is more than 0.2 percent of the maximum displacer length, the relay must be repaired or replaced.
5. See the relay removal and replacement procedures and, if necessary, the relay disassembly and assembly procedures if the relay is to be repaired.
6. Turn off the supply pressure, remove the pipe plug, and install the PROPORTIONAL BAND adjustment assembly.

Replacing Receiver/Controller Parts

See figure 14 for key number locations, unless otherwise indicated.

Bellows Replacement

Use the following bellows replacement procedure to replace defective bellows or change the output signal range.

Removal

1. Remove the relay tubing assembly (key 11), the INCREASE OUTPUT PRESSURE plate (key 35), and the attached restriction plug orifice assembly (key 11).
2. Take out the four bellows screws (key 96). These are special screws with air passages in them so, be careful not to lose them.
3. Compress the bellows (both are key 65) slightly and slip them out of the bellows frame (keys 133 or 134).
4. Unscrew the bellows from the beam (key 59). A gasket (key 79) fits between the end of the bellows and the bellows frame.
5. Inspect each bellows and gasket and, if necessary, replace them.

Replacement

1. First install the bellows gasket (key 79), then install each bellows (key 59) by screwing it onto the beam (key 59).
2. Compress the bellows slightly and slip them into the bellows frame (key 133 or 134).

3. Secure the screws (key 96) and replace the tubing.
4. Check all tubing connections and the bellows screws for leaks. Tighten as necessary and proceed to the Calibration section.
5. If a bellows assembly (key 65) with a different range is installed, replace the gauges (key 20 or 135) with those with an appropriate measurement capability.

Changing the Relay

Remove the relay to replace it.

Removal

1. Disconnect the tubing (key 11) from the relay.
2. Remove two relay mounting screws, the relay, and the relay gasket (keys 43, 34, and 22).

Replacement

1. Install a new gasket (key 22), the replacement relay (key 34), and secure with two mounting screws (key 43).
2. Connect the tubing (key 11) to the relay.
3. See the testing relay deadband procedures in this section.
4. If the deadband is within tolerance, see the Calibration section.

Changing Proportional or Reset Valve

1. Disconnect the appropriate tubing(s) from the proportional or reset valve.
2. Removing the valve assembly:
   a. Remove the proportional valve assembly by unscrewing it from the relay base. Install the replacement assembly.
   b. Remove the reset valve assembly by unscrewing the two machine screws (key 182, not shown) located behind the reset valve on the back of the case. Install the replacement assembly.

Parts Ordering

Whenever corresponding with your Emerson Process Management sales office, include the receiver/controller type number and the serial number. The serial number can be found on the nameplate.

⚠ WARNING

Use only genuine Fisher replacement parts. Components that are not supplied by Emerson Process Management should not, under any circumstances be used in any Fisher instrument. The use of components not manufacture by Emerson Process Management may void your warranty, might adversely affect the performance of the instrument, and could cause personal injury or property damage.

Parts Kits

Key	Description	Part Number
	Receiver/Controller Repair Kits Contains keys 17, 19, 21, 24, 38, and 45	
	Standard Temperature	R2506X00L12
	High Temperature	R2506X00H12
	Relay Replacement Kit Contains key 22 (43 for 2500 and 2502) and the relay assembly (key 34)	
	Standard Temperature	RRELAYX0L22
	High Temperature	RRELAYX0H22
	2506/2516 Controller Cover Gasket Kit Contains qty. 5 cover gaskets, key 21	R2506CVR012

Parts List

Note

Contact your Emerson Process Management sales office for Part Ordering information.

Receiver/Controller Common Parts (figure 14)

Note

Case Vent Options:

• The standard receiver/controller case features an open case vent. The case is not drilled for the optional tapped vent.

• All receiver/controller cases feature an open bellows vent/remote set point connection. A external vent assembly (key 128) is recommended if the remote set point connection is not made.

• The optional receiver/controller case features a tapped vent for applications requiring a remote vent line. The standard case vent is sealed w/a machine screw. An external connection (air vent plug, key 137) w/gasket (key 138) and hex nut (key 139) can be added to the tapped vent.

Key	Description
1	Controller case (controller back), die cast aluminum for 2506, 2516 **Standard:** W/open case vent (no optional tapped vent for vent line) **Optional:** W/tapped vent for vent line (case vent sealed with machine screw) **Additional option:** Case pressure-tested to 0.1 bar (2 psig). Contact your Emerson Process Management sales office to order pressure testing. Label (key 179) is added to the case.
1	Controller case (controller back), die cast Aluminum for 2516F, w/open case vent (no optional tapped vent for vent line)
2	Controller cover, die cast
3	Door handle, steel pl
4	Door handle shaft, stainless steel (not shown)
5	Machine screw, steel pl
6	Washer, stainless steel
7	Door hook, steel pl
8	Elastic stop nut, steel pl
9	Hinge pin, stainless steel, (2 req'd)
10	Compensator tubing assembly, proportional, stainless steel
11	Relay tubing assembly, 2506 and 2516, stainless steel
17	Orifice cap, brass

Note

Gauges:

See key 135 for input (instrument) gauge or pipe plug.

20*	Output (diaphragm) gauge Triple scale 0 to 30 psig/0-0.2 MPa/0-2 bar 0 to 60 psig/0-0.4 MPa/0-4 bar Dual scale 0 to 30 psig/0-2 kg/cm^2
21*	Cover gasket, chloroprene
22*	Relay gasket, Standard temperature, chloroprene High temperature, silicone
23	Relay base, die cast zinc
24*	Relay base gasket (not shown) Standard temperature, chloroprene High temperature, silicone rubber
25	Flexure strip, stainless steel
26	Flexure strip nut, steel (2 req'd)
27	Flexure strip base, steel
28	Level set arm, steel
29	Latch pin, steel

*Recommended spare parts

Key	Description
31	Nut, brass (2 req'd)
32	Flapper, K93602 nickel alloy
34	Relay assembly Standard temperature High temperature
35	Level adjustment assembly
35C	Level adjustment dial (not shown), aluminum Std, clockwise adjustment Optional, counter-clockwise adjustment For use w/2500 controller
36	Proportional band assembly
41	Screw, steel pl (2 req'd)
42	Machine screw, steel pl (2 req'd)
43	Machine screw, steel pl (2 req'd)
44	Machine screw, steel pl (6 req'd)
46	Machine screw, stainless steel (4 req'd)
47	Spring (not shown)
56	Bellows stud, brass (2 req'd) (not shown)
59	Bellows beam, steel pl
65*	Bellows assembly Brass Range: 0.2 to 1 bar (3 to 15 psig) Gray color code 0.4 to 2 bar (6 to 30 psig) Green color code Stainless steel Range: 0.2 to 1 bar (3 to 15 psig) Gray color code 0.4 to 2 bar (6 to 30 psig) Green color code

Note

Bellows Assembly:

Select specific bellows assembly by application pressure range.

Key	Description
75	Reset tubing assembly, stainless steel
77*	Bellows frame gasket (2 req'd) (not shown) Standard temperature, chloroprene High temperature, silicone
79*	Bellows gasket (4 req'd) Standard temperature, chloroprene High temperature, silicone
91	Reset restriction valve assembly 2516 Standard temperature High temperature 2516F Standard temperature
96	Bellows screw (4 req'd) brass stainless steel
128	External vent assembly (not shown) for bellows vent opening when remote set point connection is not made plastic/stainless steel
129*	Switch plate gasket (2 req'd) (not shown) Standard temperature, nitrile High temperature, silicone
130	Machine screw, steel pl
132	Switch plate, die cast zinc (2 req'd)
133	Right bellows frame, die cast zinc
134	Left bellows frame, die cast zinc
135*	Input (instrument) gauge Triple Scale 0 to 30 psig/0-0.2 MPa/0-2 bar 0 to 60 psig/0-0.4 MPa/0-4 bar Dual Scale 0 to 30 psig/0-2 kg/cm^2

Note

Gauges:

See key 20 for output (diaphragm) gauge.

Key	Description
135	Pipe plug (not shown), brass Use instead of input gauge
136	Machine screw, steel pl (18 req'd)
137	Air vent plug, brass For use w/optional case (key 1) featuring tapped vent
138*	Vent plug gasket, chloroprene For use w/key 137
139	Hex nut, steel pl For use w/key 137
179	Label, paper For case (back), if pressure-tested. See key 1
186	Anti-reset windup valve assembly See following list for individual parts
215	Nameplate

*Recommended spare parts

Figure 14. Fisher 2506 and 2516 Receiver-Controller Assemblies

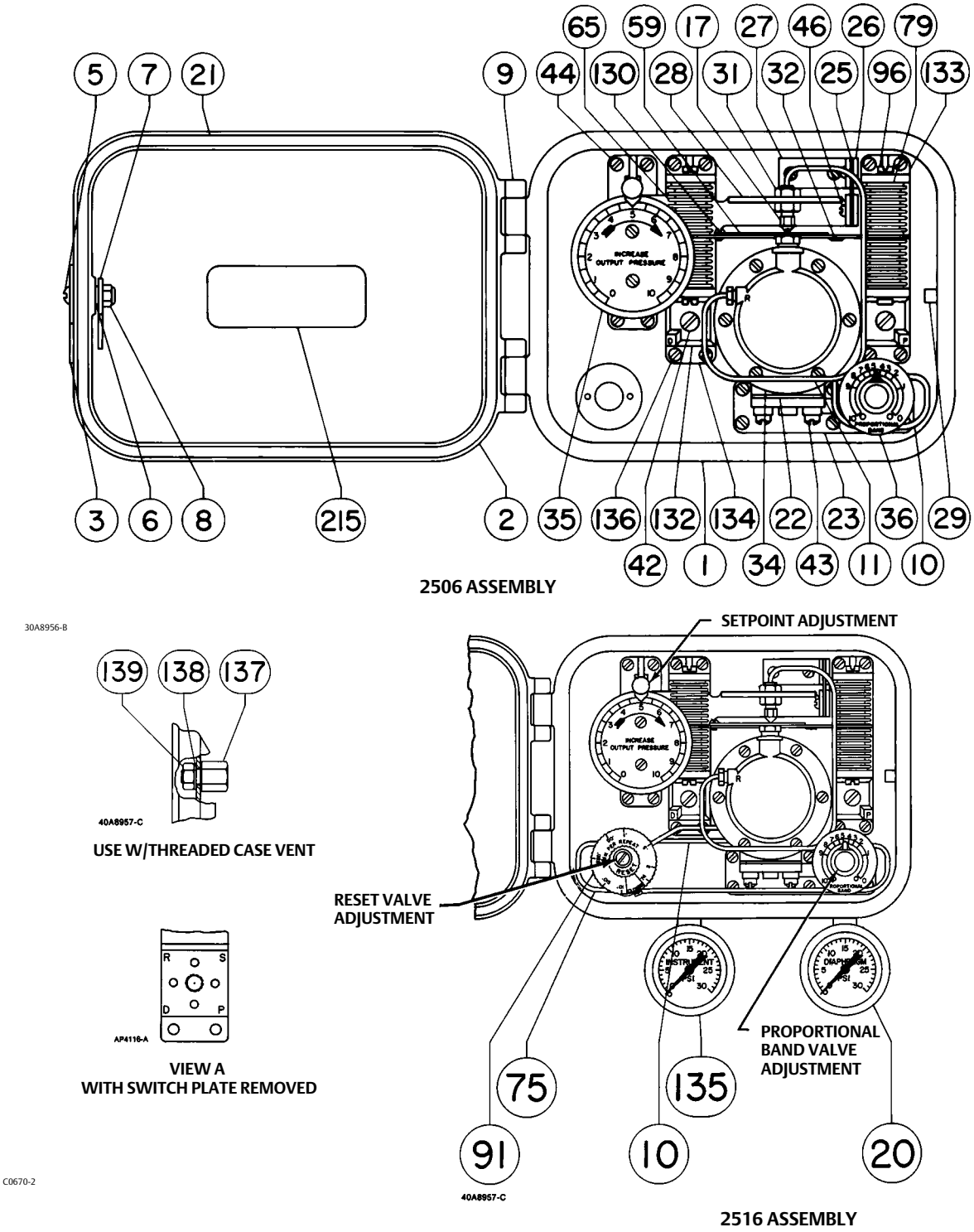

Key Description

Anti-Reset Windup Valve for 2516F Only (figure 15)

192 Lower valve body assembly
193* O-ring, nitrile (3 req'd)
194 Diaphragm assembly, rubber
195 Spring, steel
196 Upper body half, aluminum
197 Adjustment screw, brass
198 Spring seat, aluminum
199 Machine screw, stainless steel (4 req'd)
200 Machine screw, stainless steel (2 req'd)

Figure 15. Fisher 2516F Anti-Reset Windup Valve Assembly

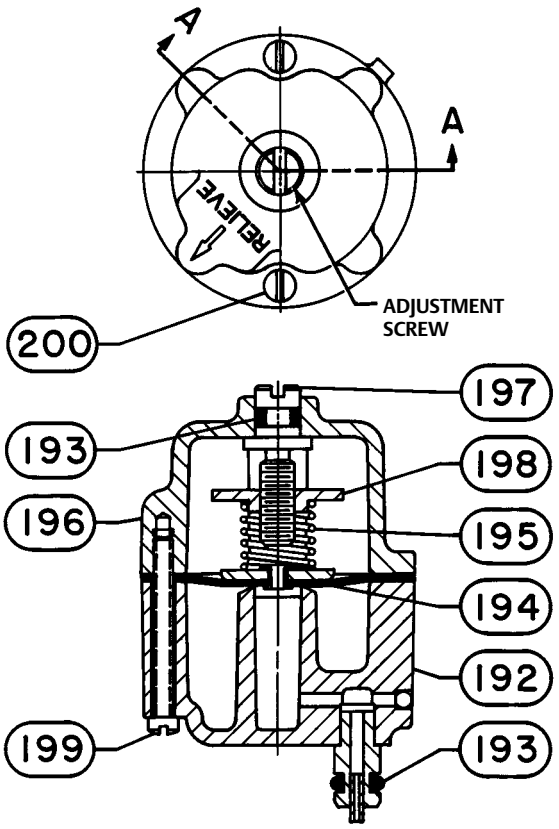

Key Description

2516F Reset and Anti-Reset Windup Valve Assembly (figure 16)

181 Relief tubing assembly
182 Machine screw, steel pl (2 req'd)
183* O-ring, Nitrile
184 Manifold, aluminum
185 Manifold nipple, aluminum
186 Differential relief valve

Figure 16. Fisher 2516F Reset and Anti-Reset Windup Valve Assembly

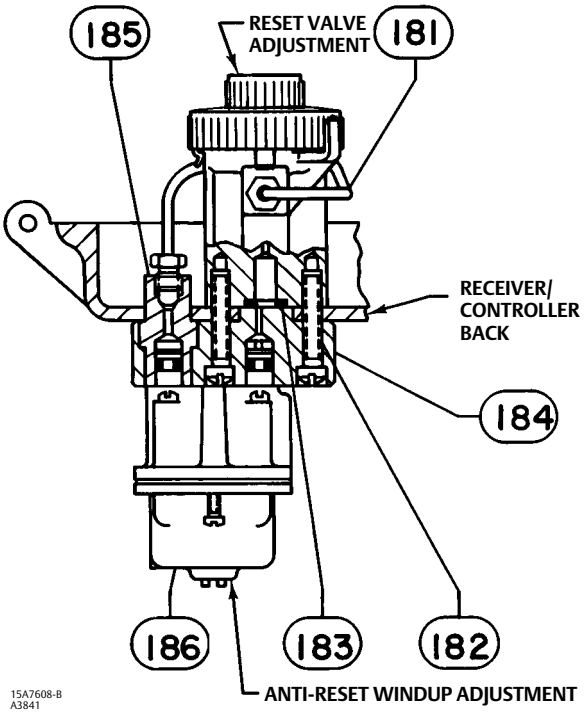

*Recommended spare parts

Mounting Parts

Key Description

Yoke Mounting (figures 3 and 4)

39 Cap screw (2 req'd)
48 Cap screw (2 req'd)
For 513, 657, 667
For 480
78 Spacer (2 req'd)
For 480
164 Mounting bracket
174 Spacer Spool (2 req'd)

Regulator mounting. To upper yoke boss

85 Cap screw (2 req'd)

Wall Mounting (figure 6)

39 Cap screws, (2 req'd)
78 Spacer, (2 req'd)
83 Lock washer (2 req'd)
164 Mounting plate, steel pl

174 Spacer, (2 req'd)

Regulator mounting

165 Nipple, to join regulator to receiver/controller supply connection
178 Street Elbow, for supply connection to regulator

Case Mounting (figure 7)

39 Cap screw (2 req'd)
48 Cap screw (2 req'd)
164 Mounting bracket, steel pl

Key Description

Regulator mounting. To actuator case (not shown)

40 Hex nut (2 req'd)
84 Lock washer (2 req'd)
85 Cap screw (2 req'd)
176 Cap screw (2 req'd)

177 Bracket

Pipestand Mounting (figure 8)

39 Cap screw, (2 req'd)
78 Spacer, (2 req'd)
83 Lock washer (2 req'd)
164 Mounting plate, steel pl

175 Pipe clamp (2 req'd)
(includes 2 hex nuts for each clamp)

Regulator mounting. To mounting plate (not shown)

40 Hex nut (2 req'd)
84 Lock washer (2 req'd)
85 Cap screw (2 req'd)

2500 Controller/Transmitter and 2506/2516 Receiver/Controller Mounting (figure 9)

39 Cap screw (4 req'd)
83 Lock washer (4 req'd)
164 Mounting plate, steel pl

Regulator mounting on 2506, 2516. With separate supply sources and separate regulators

165 Nipple, to join regulator to receiver/controller supply connection

Regulator mounting on 2506, 2516. With common supply source and separate regulators

165 Nipple, to join regulator to receiver/controller supply connection
166 Nipple, to join tee (key 167) to controller/transmitter regulator
167 Tee (common supply connection at controller/transmitter regulator)
172 Connector to tee (key 167)
173 Street Elbow, for receiver/controller regulator supply connection

Neither Emerson, Emerson Process Management, nor any of their affiliated entities assumes responsibility for the selection, use or maintenance of any product. Responsibility for proper selection, use, and maintenance of any product remains solely with the purchaser and end user.

Fisher is a mark owned by one of the companies in the Emerson Process Management business unit of Emerson Electric Co. Emerson Process Management, Emerson, and the Emerson logo are trademarks and service marks of Emerson Electric Co. All other marks are the property of their respective owners.

The contents of this publication are presented for informational purposes only, and while every effort has been made to ensure their accuracy, they are not to be construed as warranties or guarantees, express or implied, regarding the products or services described herein or their use or applicability. All sales are governed by our terms and conditions, which are available upon request. We reserve the right to modify or improve the designs or specifications of such products at any time without notice.

Emerson Process Management
Marshalltown, Iowa 50158 USA
Sorocaba, 18087 Brazil
Chatham, Kent ME4 4QZ UK
Dubai, United Arab Emirates
Singapore 128461 Singapore

www.Fisher.com

© 1978, 2015 Fisher Controls International LLC. All rights reserved.