# Fisher® 1078 Declutchable Manual Actuator

## Contents

Introduction . . . . . 1
Scope of Manual . . . . . 1
Description . . . . . 2
Specifications . . . . . 3
Educational Services . . . . . 3
Installation . . . . . 5
Converting An Existing Power Actuator for use with the Fisher 1078 Manual Actuator . . . . . 6
Installing the Manual Actuator . . . . . 6
Installing the Manual Actuator on a 1061 Size 30, 40, 60, 68, 80, or 100 and 1052 Size 70 . . . . . 7
Installing the Manual Actuator on a 2052 Size 1, 2, or 3 . . . . . 7
Operation . . . . . 7
Engaging and Disengaging the Manual Actuator . . 8
Engaging the Manual Actuator . . . . . 8
Disengaging the Manual Actuator . . . . . 8
Maintenance . . . . . 8
Lubrication . . . . . 9
Parts Ordering . . . . . 10
Parts List . . . . . 10
Manual Actuator Assembly . . . . . 10
Field Mounting Parts . . . . . 10
For 1061; and 1052 Size 70 Actuators . . . . . 10

Figure 1. Fisher 1078 Manual Actuator Mounted on a 2052 Size 1 Actuator

X0178

# Introduction

## Scope of Manual

This instruction manual includes installation, operation, and maintenance information for the Fisher 1078 declutchable manual actuator (figure 1). Refer to separate instruction manuals for instructions covering the power actuator and control valve.

Do not install, operate, or maintain a 1078 declutchable manual actuator without being fully trained and qualified in valve, actuator, and accessory installation, operation, and maintenance. **To avoid personal injury or property damage, it is important to carefully read, understand, and follow all the contents of this manual, including all safety cautions and warnings.** If you have any questions about these instructions, contact your Emerson Process Management sales office before proceeding.

Table 1. Specifications

**Available Configurations**

Direct and reverse acting; see Handwheel Rotation in this specification table

**Actuator Sizes**

See tables 2, 3, and 4

**Acceptable Coupling Shaft Diameters**

See tables 2, 3, and 4

**Power Actuator Compatibility**

See tables 2, 3, and 4

**Output Torque**

See tables 2, 3, and 4

**Wheel-Rim Force**

See tables 2, 3, and 4

**Handwheel Turns Required For Full Rotation**

See tables 2, 3, and 4

**Handwheel Rotation**

Direct Acting Construction: Clockwise handwheel rotation closes the valve (produces clockwise valve shaft rotation)

Reverse Acting Construction: Clockwise handwheel rotation closes the valve (produces counterclockwise valve shaft rotation)

Decide whether Direct or Reverse Action is required by referring to the appropriate valve or power actuator instruction manual and determining valve rotation.

**Maximum Output Rotation**

90 degrees; limited by travel stops in the power actuator

**Standard Mounting Positions**

1052 (size 70)[1]: handwheel down (std) or handwheel right-hand or left-hand mount (optional)

1061 (sizes 30, 40, 60, 68, 80, and 100)[1]: handwheel down (std) or handwheel right-hand or left-hand mount (optional)

2052 (sizes 1, 2, and 3)[1]: handwheel down (std) or handwheel right-hand or left-hand mount (optional)

**Approximate Weights without Handwheel**

Size AAA: 2.7 kg (6 lb)
Size AA: 6.8 kg (15 lb)
Size A: 9.5 kg (21 lb)
Size 2A: 13.6 kg (30 lb)
Size 1A: 15.9 kg (35 lb)
Size B: 23.1 kg (51 lb)
Size C: 29.9 kg (66 lb)
Size D: 63.5 kg (140 lb)
Size II-FA: 81.6 kg (180 lb)

**Handwheel Weight**

6-inch: 1.8 kg (4 lb)
8-inch: 2.3 kg (5 lb)
12-inch: 3.2 kg (7 lb)
16-inch: 6.8 kg (15 lb)
24-inch: 5.4 kg (12 lb)
30-inch: 6.4 kg (14 lb)
36-inch: 7.3 kg (16 lb)

1. If a positioner is used, the right-hand or left-hand mounting option will be limited to the side away from the positioner.

# Description

The 1078 manual actuator, shown in figures 1 and 2, is a declutchable unit for manual operation of control valves and equipment that use power actuators. The 1078 manual actuator mounts directly to Fisher 1052 size 70; 1061 sizes 30, 40, 60, 68, 80, and 100; and to all sizes of 2052 actuators. The 1078 manual actuator can be engaged to allow manual operation of the valve when the power actuator is not in use. It can be disengaged to allow automatic operation of the valve by the power actuator. The mechanism used allows manual actuator engagement at any point of power actuator rotation.

Figure 2. Fisher 1078 Declutchable Manual Actuator Mounted on a 2052 Size 1 Actuator and V300 Valve with FIELDVUE™ DVC6200 Digital Valve Controller

X0177

# Specifications

1078 manual actuator specifications are given in table 1. Specifications for a control valve assembly as it comes from the factory appear on a nameplate attached to the power actuator.

# Educational Services

For information on available courses for Fisher 1078 manual actuators, as well as a variety of other products, contact:

Emerson Process Management
Educational Services - Registration
Phone: 1-641-754-3771 or 1-800-338-8158
E-mail: education@emerson.com
http://www.emersonprocess.com/education

## Table 2. Fisher 2052 Actuator Size Selection and Specifications for Sizes AAA, A, and C

| MANUAL ACTUATOR SIZE | SHAFT SIZE | | POWER ACTUATOR | | STANDARD HANDWHEEL DIAMETER | | MAXIMUM TORQUE | | WHEEL-RIM-FORCE | | | | HANDWHEEL TURNS FOR ROTATION | |
|---|---|---|---|---|---|---|---|---|---|---|---|---|---|---|
| | | | | | | | | | For Maximum Torque | | For Less Than Maximum Torque | | Degrees | |
| | mm | Inch | Type | Size | mm | Inch | N•m | Lbf•in | N | Pounds | N | Pounds | 60 | 90 |
| AAA (2400 in • lbs) | 12.7 | 1/2 | 2052 | 1 | 203 | 8 | 131 | 1156 | 144 | 32 | Divide N•m req'd by 0.91 | Divide lbf•in req'd by 36 | 4 | 6 |
| | 14.2x15.9<br>15.9 | 9/16x5/8<br>5/8 | | | | | 211 | 1866 | 232 | 52 | | | | |
| | 19.1 | 3/4 | | | | | 271 | 2400 | 298 | 67 | | | | |
| A (8000 in • lbs) | 14.3x15.9<br>15.9 | 9/16x5/8<br>5/8 | 2052 | 2 | 406 | 16 | 489 | 4326 | 204 | 45 | Divide N•m req'd by 2.4 | Divide lbf•in req'd by 96 | 5.3 | 8 |
| | 19.1 | 3/4 | | | | | 590 | 5221 | 246 | 54 | | | | |
| | 22.2<br>25.4 | 7/8<br>1 | | | | | 818 | 7241 | 341 | 75 | | | | |
| | 28.6x31.8<br>31.8 | 1-1/8x1-1/4<br>1-1/4 | | | | | 904 | 8000 | 377 | 83 | | | | |
| C (18000 in • lbs) | 19.1 | 3/4 | 2052 | 3 | 610 | 24 | 1338 | 11842 | 279 | 61 | Divide N•m req'd by 4.8 | Divide lbf•in req'd by 194 | 9 | 13.5 |
| | 22.2<br>25.4 | 7/8<br>1 | | | | | 1566 | 13862 | 326 | 71 | | | | |
| | 28.6x31.8<br>31.8<br>38.1<br>39.7x44.5<br>44.5<br>50.8 | 1-1/8x1-1/4<br>1-1/4<br>1-1/2<br>1-9/16x1-3/4<br>1-3/4<br>2 | | | | | 2034 | 18000 | 424 | 93 | | | | |

## Table 3. Fisher 1052 Actuator Size Selection and Specifications for Sizes 2A, 1A, B, and C

| MANUAL ACTUATOR SIZE (max output torque) | SHAFT SIZE | | POWER ACTUATOR(1) | | GEAR RATIO | HANDWHEEL DIAMETER | | MAXIMUM TORQUE(2) | | WHEEL-RIM-FORCE | | | | HANDWHEEL TURNS FOR ROTATION | |
|---|---|---|---|---|---|---|---|---|---|---|---|---|---|---|---|
| | | | | | | | | | | For Maximum Torque | | For Less Than Maximum Torque | | Degrees | |
| | mm | Inch | Type | Size | | mm | Inch | N•m | Lbf•in | N | Pounds | N | Pounds | 60 | 90 |
| 1A (8200 in • lbs) | 31.8,<br>28.6x<br>31.8 | 1-1/4,<br>1-1/8x<br>1-1/4 | 1052 | 70 | 32:1 | 610 | 24 | 929 | 8200 | 378 | 85 | Divide N•m req'd by 2.4 | Divide lbf•in req'd by 96 | 5.3 | 8 |
| | 38.1<br>31.8x<br>38.1 | 1-1/2,<br>1-1/4x<br>1-1/2 | | | | | | | | | | | | | |
| | (44.4,<br>50.8),<br>39.7<br>x44.5 | (1-3/4,<br>2),<br>1-9/16<br>x1-3/4 | | | | | | | | | | | | | |
| B (12,000 in • lbs) | 31.8 | 1-1/4 | 1052 | 70 | 40:1 | 610 | 24 | 1356 | 12,000 | 369 | 83 | Divide N•m req'd by 3.6 | Divide lbf•in req'd by 144 | 6.7 | 10 |
| | 38.1,<br>(44.4,<br>50.8) | 1-1/2,<br>(1-3/4,<br>2) | | | | | | | | | | | | | |
| C (18,000 in • lbs) | 31.8 | 1-1/4 | 1052 | 70 | 54:1 | 610 | 24 | 2034 | 18,000 | 414 | 93 | Divide N•m req'd by 4.8 | Divide lbf•in req'd by 194 | 9 | 13.5 |
| | (44.4,<br>50.8) | (1-3/4,<br>2) | | | | | | | | | | | | | |

1. Field conversion of actuators for F and G mounting adaptations requires installation of new parts.
2. Compare table value with torque requirements of the valve plus the torque required to compress the power actuator spring (from Fisher Catalog 14). Note that dynamic torque of the valve may have a positive or negative effect on total torque required.

Table 4. Fisher 1061 Actuator Size Selection and Specifications for Sizes 2A, 1A, B, C, D, and II-FA

| MANUAL ACTUATOR SIZE (max output torque) | SHAFT SIZE | | POWER ACTUATOR | | GEAR RATIO | HANDWHEEL DIAMETER | | MAXIMUM TORQUE(1) | | WHEEL-RIM-FORCE | | | | HANDWHEEL TURNS FOR ROTATION | |
|---|---|---|---|---|---|---|---|---|---|---|---|---|---|---|---|
| | | | | | | | | | | For Maximum Torque | | For Less Than Maximum Torque | | Degrees | |
| | mm | Inch | Type | Size | | mm | Inch | N•m | Lbf•in | N | Pounds | N | Pounds | 60 | 90 |
| 2A (4800 in.lbs) | 12.7 | 1/2 | 1061 | 30 | 34:1 | 152 | 6 | 58 | 515 | 89 | 20 | Divide N•m req'd by 0.66 | Divide lbf•in req'd by 26 | 5.7 | 8.5 |
| | 15.9, 14.3x 9.5 | 5/8, 9/16x 5/8 | | | | | | 138 | 1225 | 214 | 48 | | | | |
| | 19.1 | 3/4(3) | | | | 203 | 8 | 239 | 2120 | 276 | 62 | Divide N•m req'd by 0.86 | Divide lbf•in req'd by 34 | | |
| | (22.2, 25.4) | (7/8, 1) | | | | 305 | 12 | 467(4) | 4140(4) | 360 | 81 | Divide N•m req'd by 1.3 | Divide lbf•in req'd by 51 | | |
| | 31.8 | 1-1/4 | | | | | | 541 | 4800 | 416 | 94 | | | | |
| 1A (8200 in.lbs) | (22.2, 25.4) | (7/8, 1) | 1061 | 40, 60, 68 | 32:1 | 305 | 12 | 467 | 4140 | 382 | 86 | Divide N•m req'd by 1.2 | Divide lbf•in req'd by 48 | 5.3 | 8 |
| | 31.8, 28.6x 31/8 | 1-1/4, 1-1/8x 1-1/4 | | | | 610 | 24 | 929 | 8200 | 378 | 85 | Divide N•m req'd by 2.4 | Divide lbf•in req'd by 96 | | |
| | 38.1 31.8x 38.1 | 1-1/2, 1-1/4x 1-1/2 | | | | | | | | | | | | | |
| | (44.4, 50.8), 39.7 x44.5 | (1-3/4, 2), 1-9/16 x1-3/4 | | | | | | | | | | | | | |
| B (12,000 in.lbs) | 31.8 | 1-1/4 | 1061 | 40, 60, 68 | 40:1 | 610 | 24 | 1109 | 9815 | 308 | 68 | Divide N•m req'd by 3.6 | Divide lbf•in req'd by 144 | 6.7 | 10 |
| | 38.1, (44.4, 50.8) | 1-1/2, (1-3/4, 2) | | | | | | 1356 | 12,000 | 377 | 83 | | | | |
| C (18,000 in.lbs) | 31.8 | 1-1/4 | 1061 | 40, 60, 68 | 54:1 | 610 | 24 | 1109 | 9815 | 231 | 51 | Divide N•m req'd by 4.8 | Divide lbf•in req'd by 194 | 9 | 13.5 |
| | (44.4, 50.8) | (1-3/4, 2) | | | | | | 2034 | 18,000 | 424 | 93 | | | | |
| D (30,000 in.lbs) | (44.4, 50.8) | (1-3/4, 2) | 1061 | 80, 100 | 64:1 | 762 | 30 | 2658 | 23,524 | 369 | 82 | Divide N•m req'd by 7.2 | Divide lbf•in req'd by 287 | 10.7 | 16 |
| | 54, 63.5 57.2x 63.5 | 2-1/8, 2-1/2, 2-1/4x 2-1/2 | | | | 914 | 36 | 3390 | 30,000 | 394 | 87 | Divide N•m req'd by 8.6 | Divide lbf•in req'd by 345 | | |
| II-FA (60,000 in.lbs) | 54, 63.5 | 2-1/8, 2-1/2 | 1061 | 80, 100 | 288:1(2) | 406 | 16 | 6301 | 55,762 | 400 | 90 | Divide N•m req'd by 15.7 | Divide lbf•in req'd by 619 | 48 | 72 |

1. Compare table value with torque requirements of the valve plus the torque required to compress the power actuator spring (from Fisher Catalog 14). Note that dynamic torque of the valve may have a positive or negative effect on total torque required.
2. Has spur gear.
3. 2A 3/4 inch shaft will also mount on the 1061 size 40, 60, and 68.
4. Maximum torque of connection between power and manual actuator.

# Installation

**⚠ WARNING**

**Always wear protective gloves, clothing, and eyewear when performing any installation operations to avoid personal injury.**

**Check with your process or safety engineer for any additional measures that must be taken to protect against process media.**

**If installing into an existing application, also refer to the WARNING at the beginning of the Maintenance section in this instruction manual.**

The 1078 manual actuator is normally shipped mounted on a power actuator. If the manual actuator has been shipped separately for installation on a power actuator, or if the manual actuator was removed for maintenance, mount the manual actuator by following the instructions presented in this section.

## Converting An Existing Power Actuator For Use With The Fisher 1078 Manual Actuator

Field conversion of a power actuator for use with the 1078 manual actuator may require replacement and/or removal of some parts. The procedures which follow apply only to power actuators which were not ordered specifically for use with the 1078 manual actuator. Proceed as appropriate:

## Installing the Manual Actuator

**⚠ WARNING**

**Avoid personal injury from sudden release of process pressure or bursting of parts. Before performing any maintenance operations:**

- **Do not remove the actuator from the valve while the valve is still pressurized.**
- **Always wear protective gloves, clothing, and eyewear when performing any maintenance operations to avoid personal injury.**
- **Disconnect any operating lines providing air pressure, electric power, or a control signal to the power actuator. Be sure the actuator cannot suddenly open or close the valve.**
- **Use bypass valves or completely shut off the process to isolate the valve from process pressure. Relieve process pressure on both sides of the valve. Drain the process media from both sides of the valve.**
- **Vent the power actuator loading pressure and relieve any actuator spring precompression.**
- **Use lock-out procedures to be sure that the above measures stay in effect while you work on the equipment.**
- **The valve packing box may contain process fluids that are pressurized, *even when the valve has been removed from the pipeline.* Process fluids may spray out under pressure when removing the packing hardware or packing rings, or when loosening the packing box pipe plug.**
- **Check with your process or safety engineer for any additional measures that must be taken to protect against process media.**

**CAUTION**

**Undertravel or overtravel of the valve ball or disk, especially at the closed position, may result in poor valve performance and/or damage to the equipment. Make certain that the power actuator travel stops are properly set before installing and adjusting the manual actuator. Refer to the instruction manuals for the valve and the power actuator for information about setting travel stops.**

1. Isolate the control valve from the line pressure, release pressure from both sides of the valve body, and drain the process media from both sides of the valve. Also shut off all pressure lines to the power actuator and release all

pressure from the power actuator. Use lock-out procedures to be sure that the above measures stay in effect while you work on the equipment.

2. Make certain that the power actuator travel stops have been properly set according to the caution given above.
3. For spring-return power actuators, allow the power actuator to remain in the position where the spring is relaxed. For double-acting power actuators, apply supply pressure as appropriate to position the valve disk or ball in either the open or closed position.
4. Note whether the valve disk or ball is in the open or closed position.
5. Rotate the handwheel to move the drive sleeve gear and travel indicator to the position that corresponds with the position of the valve disk or ball. For both direct and reverse acting manual actuators, clockwise handwheel rotation sets the manual actuator to the closed position. Counterclockwise handwheel rotation sets the manual actuator to the open position.

### Installing the Manual Actuator on a 1061 Size 30, 40, 60, 68, 80, or 100 and 1052 Size 70

**For manual actuator installation on 1061 sizes 30, 40, 60, 68, 80, and 100; and 1052 size 70,** remove the actuator cover (key 34) and attached parts from 1061 or 1052. Replace with 1078. Most assemblies require installation of a new lever and splined adaptor to complete the installation. When used, the splined adaptor slides inside the new lever and the lever is then clamped onto the splined adaptor. See figure 5.

1. Remove the lever and add a new lever and splined adaptor when needed. See figure 5.

The splined adaptor slides inside the new lever and the lever is then clamped onto the splined adaptor.

2. Disengage the manual actuator.
3. Install the manual actuator.
4. Tighten the cap screws to the final torque value.
5. For double-acting power actuators, be certain the power actuator is equipped with a bypass valve. Operating the handwheel mechanism against the force of differential cylinder pressures will be difficult or impossible.

### Installing the Manual Actuator on a 2052 Size 1, 2, or 3

1. Remove the travel scale and travel indicator. They will no longer be required since the 1078 has it's own scale and indicator.
2. Mount the manual actuator on the surface where the travel scale was.
3. Position the manual actuator on the 2052 so that the drive square fits into the quad square spline of the 2052 lever.
4. Bolt the manual actuator onto the 2052.

# Operation

After the travel indicator pointer has been adjusted and the control valve assembly installed, the manual actuator is ready for operation.

**CAUTION**

**Applying too much torque to the actuator and valve parts could cause damage to the parts. To avoid such damage, do not exceed the maximum allowable torques listed in table 2, 3, or 4 or any other torque limitation of internal valve parts. Also, do not use wrenches or other devices on the handwheel or handwheel shaft to increase operating force.**

If the force required to rotate the handwheel exceeds the wheel-rim force listed in tables 2, 3, and 4, refer to the maintenance procedure.

# Engaging and Disengaging the Manual Actuator

## Engaging the Manual Actuator

1. Shut off the supply pressure to the power actuator.
2. Pull the ring on the detent mechanism to unlock the lever. Move the lever into the engaged position until it is against the stop pin and locked in position by the detent mechanism. (Note that stop pins are not available on 1078 size II-FA actuators.)
3. If applicable, open the power actuator bypass valve.

## Disengaging the Manual Actuator

**CAUTION**

**Disengaging the manual actuator when forces such as spring compression, cylinder pressure, and dynamic torque are present may cause sudden, extreme movement of all control valve components. This can result in damage to equipment and violent disturbance of the process. Before disengaging the manual actuator, take appropriate steps to ensure that the return to automatic operation will not result in an extreme repositioning of control valve components. Procedures to determine approximate system balance are given in the following steps.**

1. Before disengaging the manual actuator, approximate system balance should be achieved. The system is in balance when the actual valve ball or disk position is approximately the same as the position requested by the automatic control system. Under balanced system conditions, the manual actuator disengaging lever moves freely without use of excessive force. If after releasing the detent mechanism, the lever does not move freely toward the disengaged position, some system force is causing an imbalance. A forced return to automatic operation under these conditions can cause serious damage to the equipment and violent disturbance of the process.
2. If possible, determine whether the automatic control system is tending to open or close the valve ball or disk, and rotate the handwheel in the appropriate direction until friction in the manual operator is reduced and the lever can be easily moved by hand. As an alternate approach, local manipulation of the supply pressure to the power actuator may bring the set point of the automatic system closer to the actual valve ball or disk position.
3. If a smooth transition from manual to automatic operation cannot be ensured, isolate the valve from the process. Position the manual actuator so that it matches the position of the ball or disk when no supply pressure is applied to the power actuator.
4. Pull the ring on the detent mechanism to unlock the lever. Push the lever into the disengaged position until it is against the stop pin and locked in position by the detent mechanism. (Note that stop pins are not available on 1078 size II-FA actuators.)
5. Close the bypass valve and return supply pressure to the power actuator.

# Maintenance

If the force required to rotate the handwheel exceeds the wheel-rim force listed in tables 2, 3, and 4, check for the following conditions:

- Insufficient lubrication,
- Seized actuator parts,

- Excessive pressure drop across the valve body, or
- Obstruction to the valve disk or ball rotation.

If the manual actuator does not seem to control the process fluid, the worm or drive sleeve gear teeth may be broken, the pin (key 3) may be sheared, or the internal power actuator or valve parts may be broken. Purchase a replacement manual actuator if necessary. Refer to the power actuator and valve instruction manuals if power actuator or valve maintenance is needed.

# Lubrication

The interior parts of the 1078 manual actuator should be lubricated on a regular schedule with a quality gear lubricant. The interior parts should also be lubricated whenever difficulty in handwheel rotation indicates a need for lubrication.

**⚠ WARNING**

**Avoid personal injury from sudden release of process pressure or uncontrolled movement of parts. Before performing any maintenance operations:**

- **Do not remove the actuator from the valve while the valve is still pressurized.**
- **Always wear protective gloves, clothing, and eyewear when performing any maintenance operations to avoid personal injury.**
- **Disconnect any operating lines providing air pressure, electric power, or a control signal to the power actuator. Be sure the actuator cannot suddenly open or close the valve.**
- **Use bypass valves or completely shut off the process to isolate the valve from process pressure. Relieve process pressure from both sides of the valve. Drain the process media from both sides of the valve.**
- **Vent the power actuator loading pressure and relieve any actuator spring precompression.**
- **Use lock-out procedures to be sure that the above measures stay in effect while you work on the equipment.**
- **The valve packing box may contain process fluids that are pressurized, *even when the valve has been removed from the pipeline.* Process fluids may spray out under pressure when removing the packing hardware or packing rings, or when loosening the packing box pipe plug.**
- **Check with your process or safety engineer for any additional measures that must be taken to protect against process media.**

1. Isolate the control valve from the line pressure, release pressure from both sides of the valve body, and drain the process media from both sides of the valve. If using a power actuator, also shut off all pressure lines to the power actuator, release all pressure from the actuator. Use lock-out procedures to be sure that the above measures stay in effect while you work on the equipment.
2. Mark the position of the travel indicator pointer on the indicator dial. The travel indicator pointer must be returned to its original position when assembling the manual actuator. Remove the machine screws and the travel indicator pointer.
3. Remove the manual actuator cover screws.
4. Remove the travel indicator scale and the gearbox cover plate. Coat the worm, the drive sleeve gear teeth, and the bearing surfaces of the gearbox housing and worm with a quality gear lubricant.
5. Install the cover plate and the travel indicator scale on the gearbox.
6. Replace the manual actuator cover screws.

# Parts Ordering

When corresponding with your Emerson Process Management sales office, indicate the type number and size of the power actuator and the mounting adaptation used. If the manual actuator was shipped separately (not attached to a power actuator), give the serial number of the unit, which is shown on a tag attached to the manual actuator.

For 1052 (size 70), and 1061 (sizes 30, 40, 60, 68, 80, and 100), indicate valve shaft size.

**⚠ WARNING**

**Use only genuine Fisher replacement parts. Components that are not supplied by Emerson Process Management should not, under any circumstances, be used in any Fisher valve, because they may void your warranty, might adversely affect the performance of the valve, and could cause personal injury and property damage.**

# Parts List

**Note**
For part numbers not shown, contact your Emerson Process Management sales office.

## Manual Actuator Assembly (figures 3 and 4)

| Key | Description |
|---|---|
| 1 | Actuator |
| 2 | Handwheel |
| 3 | Pin, steel |

**Note**
A new lever and splined adaptor (figure 5) are needed on most assemblies for field installation of the 1078 onto the 1052 size 70, and 1061 sizes 30, 40, 60, 68, 80, & 100 actuators.

| Key | Description |
|---|---|
| 4 | Travel Indicator scale, stainless steel |
| 5 | Travel Indicator Pointer, stainless steel |
| 6 | Machine Screw, steel (2 required) |
| 9 | Shaft Adaptor |

## Field Mounting Parts

### For 1061; and 1052 Size 70 Actuators

**Note**
Most assemblies require installation of a new lever to complete the installation. Contact your Emerson Process Management sales office.

| Description |
|---|
| Lever |

Figure 3. Fisher 1078 Declutchable Manual Actuator, Sizes 2A, 1A, B, C, and D

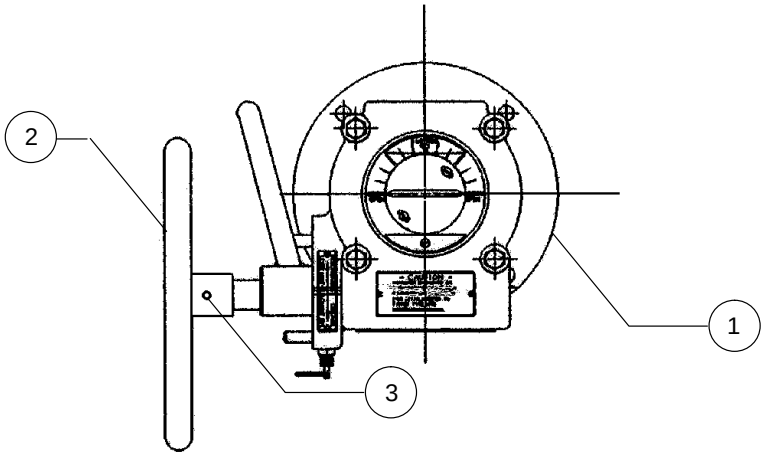


Figure 4. Fisher 1078 Declutchable Manual Actuator, Size II-FA

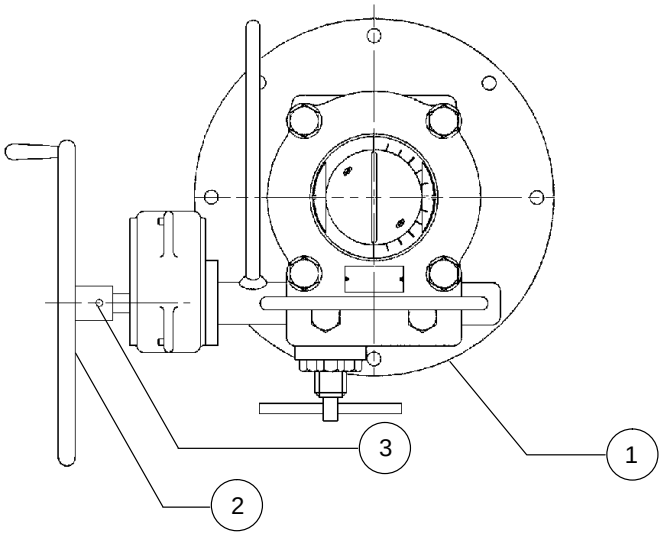

Figure 5. Lever and Splined Adaptor

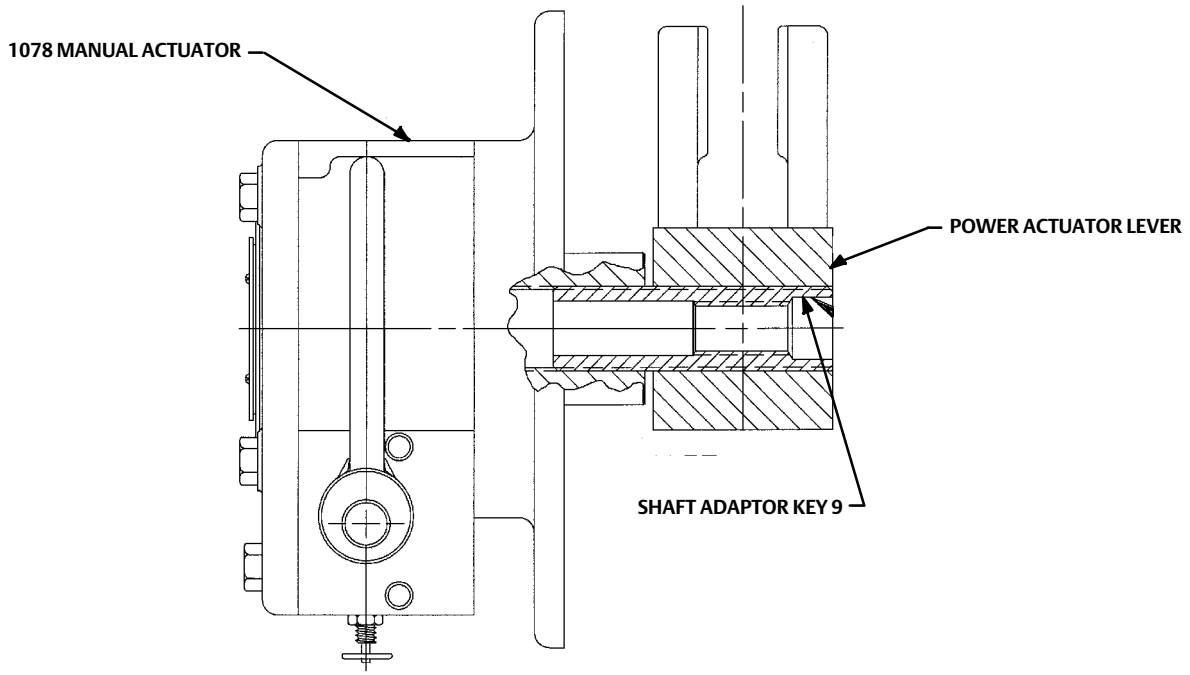


NOTE:
PROPER ASSEMBLY OF SHAFT ADAPTOR KEY 9 WHEN REQUIRED
B2458

**Neither Emerson, Emerson Process Management, nor any of their affiliated entities assumes responsibility for the selection, use or maintenance of any product. Responsibility for proper selection, use, and maintenance of any product remains solely with the purchaser and end user.**

Fisher and FIELDVUE are marks owned by one of the companies in the Emerson Process Management business unit of Emerson Electric Co. Emerson Process Management, Emerson, and the Emerson logo are trademarks and service marks of Emerson Electric Co. All other marks are the property of their respective owners.

The contents of this publication are presented for informational purposes only, and while every effort has been made to ensure their accuracy, they are not to be construed as warranties or guarantees, express or implied, regarding the products or services described herein or their use or applicability. All sales are governed by our terms and conditions, which are available upon request. We reserve the right to modify or improve the designs or specifications of such products at any time without notice.

Emerson Process Management
Marshalltown, Iowa 50158 USA
Sorocaba, 18087 Brazil
Chatham, Kent ME4 4QZ UK
Dubai, United Arab Emirates
Singapore 128461 Singapore

www.Fisher.com

© 1986, 2015 Fisher Controls International LLC. All rights reserved.