Industrial Accelerometer

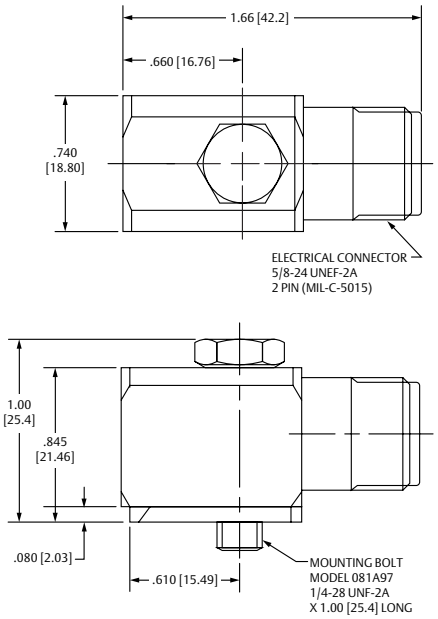

Dynamic Performance	
Sensitivity (±10%)	100 mV/g (10.2 mV/m/s^2)
Measurement Range	±50 g (±490 m/s^2)
Frequency Range (±3 dB)	0.5 to 8,000 Hz (30 to 480,000 cpm)
Mounted Resonant Frequency	25 kHz Nominal
Amplitude Linearity	±1% (0 Based, Least Squares, Straight Line)
Transverse Sensitivity	≤7%
Environmental	
Shock Limit	5,000g pk (49,050 m/s^2)
Temperature Range	-54 to 121°C (-65 to 250°F)
Temperature Response	See Graph
Sealing / Rating	Welded Hermetic / IP68
Electrical	
Settling Time	≤2.0 sec (Within 1% of Bias)
Discharge Time Constant	≥0.3 sec
Excitation Voltage / Current	18 to 28 VDC / 2.0 to 20 mA
Output Bias	8 to 12 VDC
Output Impedance	<150 ohms
Broadband Resolution (1 to 8 KHz)	350 µg (3,434 µm/s^2) Electrical Noise
Case Isolation	>10^8 ohms
Mechanical	
Weight	74 grams (2.61 oz) Sensor & Screw
Mounting Stud / Torque	¼-28 UNF / 2.7 to 6.8 Nm (2 to 5 lb ft)
Sensor Element / Geometry	Ceramic / Shear
Case Material	Stainless Steel
Connector Type (Side)	MIL-C-5015, 2 Pin
	Pin A – Signal/Power
	Pin B – Ground

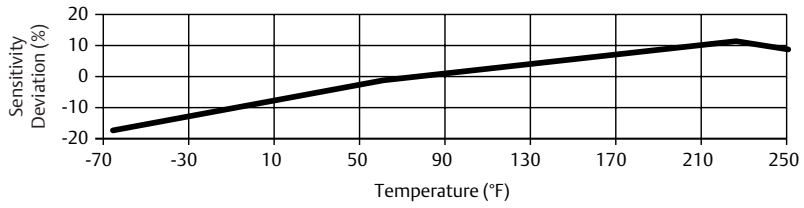

EMERSON
Process Management

Supplied Accessories
One Point Calibration
Mounting Bolt

©2014, Emerson Process Management.

The contents of this publication are presented for informational purposes only, and while every effort has been made to ensure their accuracy, they are not to be construed as warranties or guarantees, express or implied, regarding the products or services described herein or their use or applicability. All sales are governed by our terms and conditions, which are available on request. We reserve the right to modify or improve the designs or specifications of our products at any time without notice.

All rights reserved. Machinery Health is a mark of one of the Emerson Process Management group of companies. The Emerson logo is a trademark and service mark of Emerson Electric Co. All other marks are the property of their respective owners.

Emerson Process Management
Asset Optimization
835 Innovation Drive
Knoxville, TN 37932
T (865) 675-2400
F (865) 218-1401