ENDURANCE™ Conductivity Sensors

For additional information, please refer visit our website at www.rosemountanalytical.com.

CAUTION
Sensor/Process Application Compatibility

The wetted sensor materials may not be compatible with process composition and operating conditions. Application compatibility is entirely the responsibility of the user.

⚠ WARNING

Before removing the sensor, be absolutely certain that the process pressure is reduced to 0 psig and the process temperature is lowered to a safe level!

Sensor Specifications

Specifications	400	400VP	Flow Cell PN 24091-02
Wetted Materials	Titanium, PEEK (glass-filled), 316 SST, EPDM	Titanium, PEEK (glass-filled), 316 SST, EPDM	Polycarbonate, polyester, 316 SST, silicone
Temperature Range	stnd: 32–221 °F (0–105 °C) -60: 32–392 °F (0–200 °C) (requires sensor-mounted junction box)	32–221 °F (0–105 °C)	32–158 °F (0–70 °C)
Maximum Pressure	250 psig (1825 kPa abs)	250 psig (1825 kPa abs)	90 psig (722 kPa abs)
Vacuum Service	At 1.6 in Hg air leakage is less than 0.005 SCFM (0.00014 m^3/min)	At 1.6 in Hg air leakage is less than 0.005 SCFM (0.00014 m^3/min)	NA

Installation

Keep ¼ in. (6 mm) clearance between electrodes and piping. The electrodes must be completely submerged in the process liquid, i.e., to the level of the threaded connection. See Figures 1–6 for recommended orientation and installation. The 400 and 400VP sensors with 0.1 and 1.0/cm cell constants can be installed in ¾-inch pipe tees. All 400 and 400VP sensors can be installed in 1-inch tees with a ¾-inch bushing.

If the sensor is installed in a pipe tee or flow cell with the sample draining to open atmosphere, bubbles may accumulate on the electrodes. Trapped bubbles will cause errors. As bubbles accumulate, the conductivity reading normally drifts down. In the plastic flow cell, bubbles are readily visible. To control bubble formation, apply a small amount of back pressure to the flow cell or pipe tee.

Figure 1. Sensor Orientation

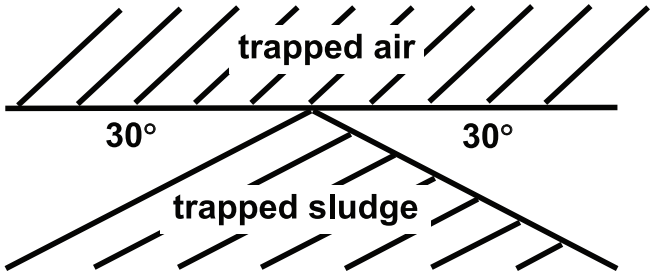

Figure 2. Direct Insertion in a Pipe

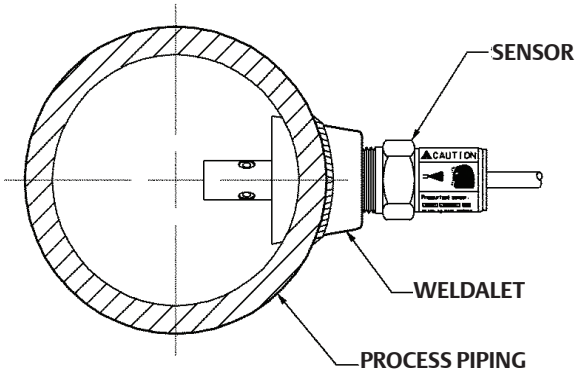

Figure 3. Insertion in a Pipe Tee

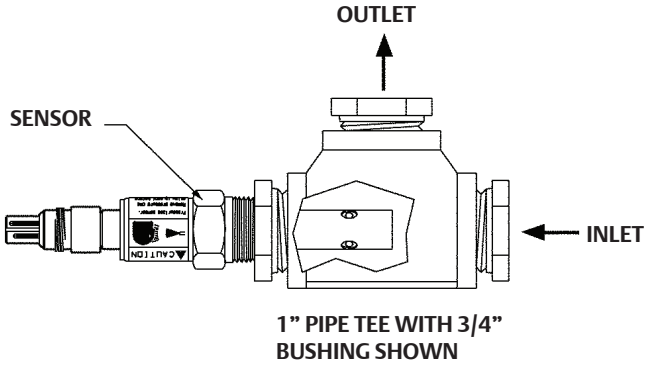

Figure 4. Insertion in a Pipe Tee

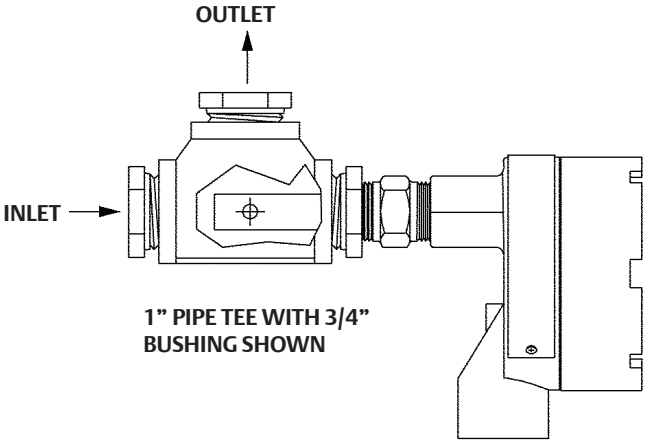

Figure 5. Insertion in a Pipe Tee

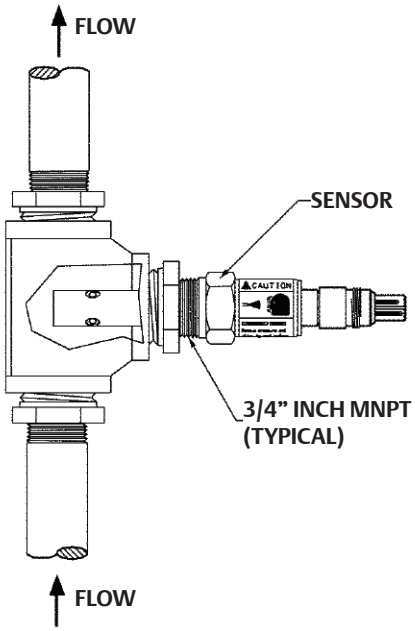

Figure 6. Insertion in a Flow Cell (PN 24091-02)

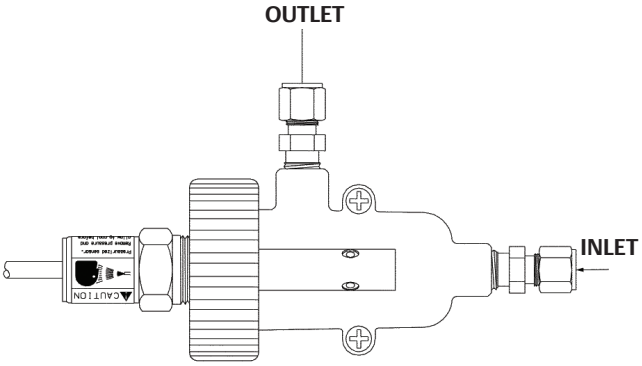

Wiring

Note
For additional wiring information on this product, including sensor combinations not shown here, please refer to either our online wiring programs or the Manual DVD enclosed with each product.

1056, 1057, 56, 5081, 6081, 54e, and XMT : http://www3.emersonprocess.com/raihome/sp/liquid/wiring/XMT/
1066 and sensors with SMART preamps: http://www2.emersonprocess.com/en-US/brands/rosemountanalytical/Liquid/Sensors/Pages/Wiring_Diagram.aspx
1055: http://www3.emersonprocess.com/raihome/sp/liquid/wiring/1055/

Wire Color and Connections in Sensor

Color	Function
Gray	Connects to outer electrode
Clear	Coaxial shield for gray wire
Orange	Connects to inner electrode
Clear	Coaxial shield for orange wire
Red	RTD — RTD in
White with red stripe	RTD — RTD sense
White	RTD — RTD return
Clear	Shield for all RTD lead wires

Wiring Diagrams

Figure 7. Wiring for 54eC

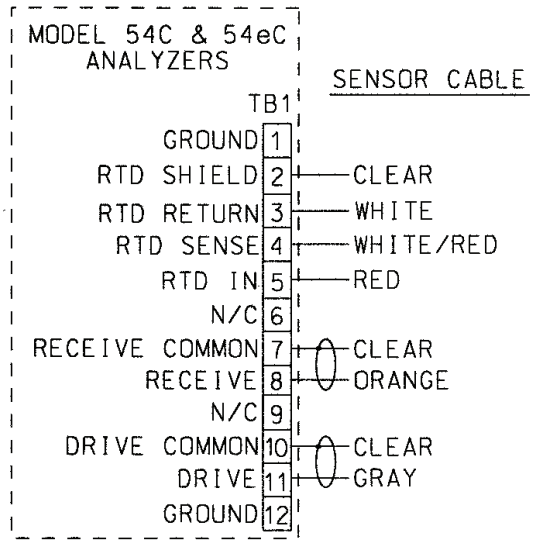

Figure 8. Wiring for 56 and 1056

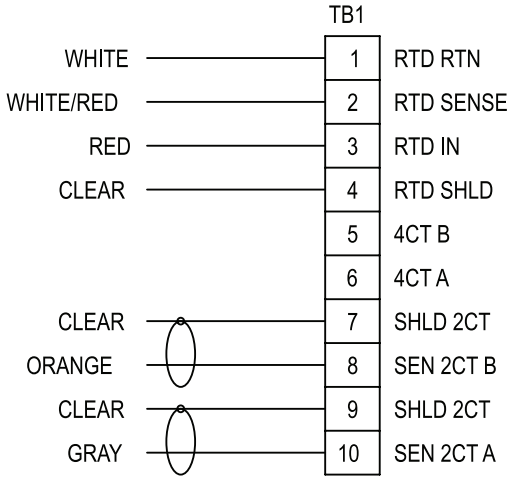

Figure 9. Wiring for 1066

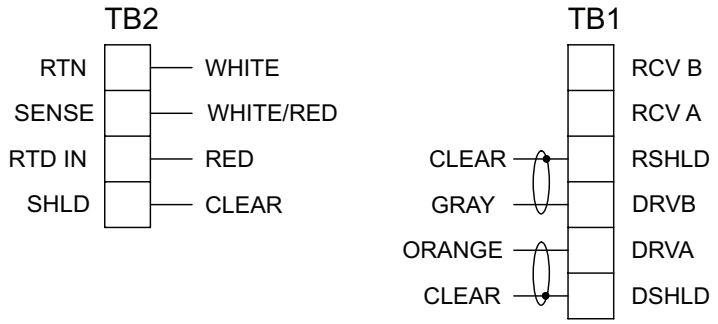

Figure 10. Wiring for XMT-C-10 (Panel)

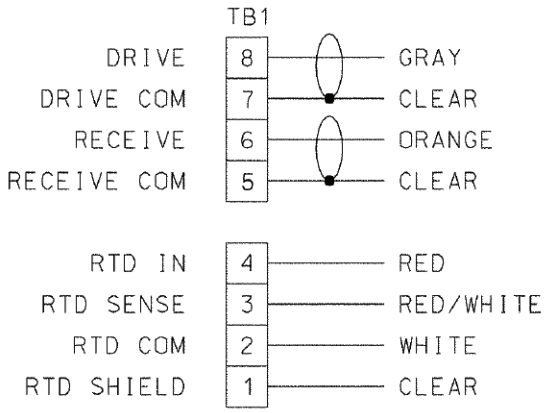

Figure 11. Wiring for XMT-C-11 (Pipe or Wall)

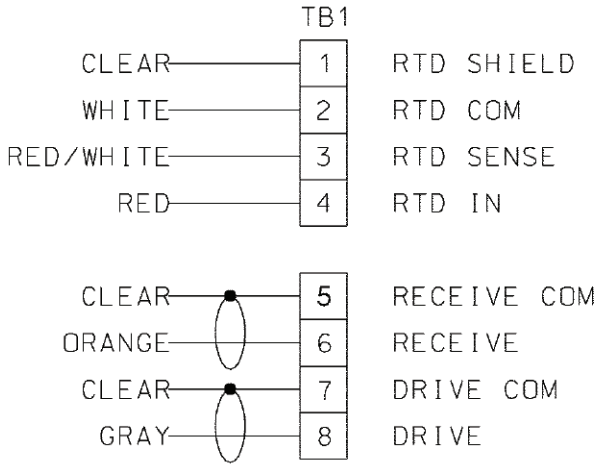

Figure 12. Wiring for 5081C

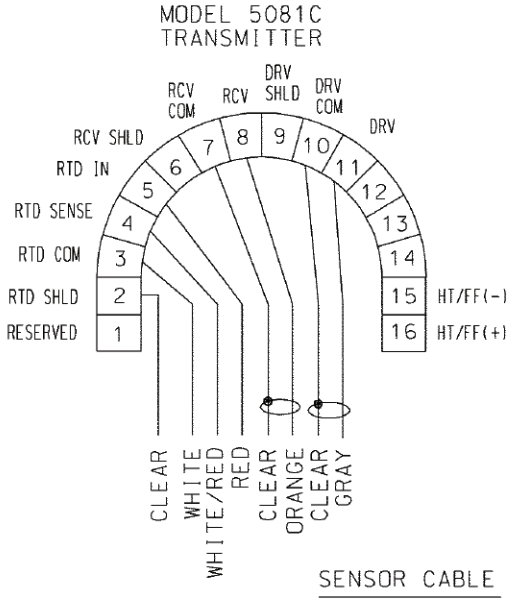

Figure 13. Wiring for 6081-C

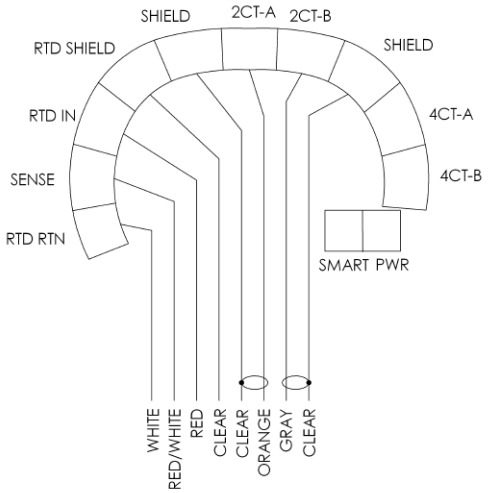

Wiring Through a Junction Box

The 400-60 sensors have a junction box mounted on the end of the sensor. See Figure 14 for wiring instructions.

If wiring connections are made through a remote junction box (PN 23550-00), wire point-to-point. Use cable 23747-00 (factory-terminated) or 9200275 (raw cable).

Figure 14. Sensor-Mounted Junction Box Wiring

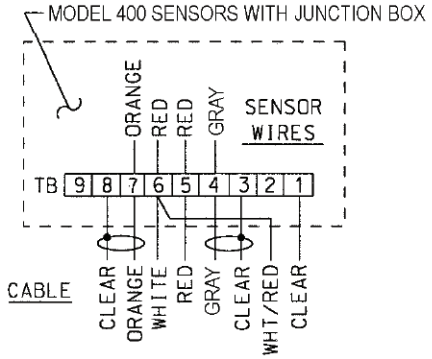

Notes:

1. **The gray sensor wire is connected to the junction box, which makes electrical contact with the OUTER electrode.**
2. **Terminals in junction box are not numbered. Refer to analyzer wiring diagram for connections at analyzer.**

Pin Out Diagram for 400VP

Figure 15. VP pin-out (viewed from connector end of sensor, looking down)

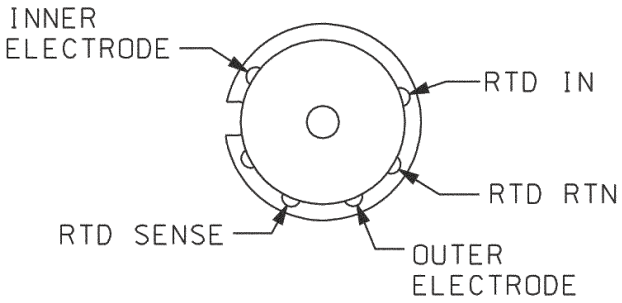

Cleaning the Sensor

Use a warm detergent solution and a soft brush or pipe cleaner to remove oil and scale. Isopropyl alcohol (rubbing alcohol) can also be used to remove oily films. Avoid using strong mineral acids to clean conductivity sensors.

Calibration

ENDURANCE conductivity sensors are calibrated at the factory and do not need calibration when first placed in service. Simply enter the cell constant printed on the label into the analyzer.

After a period of service, the sensor may require calibration. The sensor can be calibrated against a solution having known conductivity or against a referee meter and sensor. If using a standard solution, choose one having conductivity in the recommended operating for the sensor cell constant. Refer to the analyzer manual or product data sheet for recommended ranges. Do not use standard solutions having conductivity less than about 100 uS/cm. They are susceptible to contamination by atmospheric carbon dioxide, which can alter the conductivity by a variable amount as great as 1.2 uS/cm (at 25 °C). Because 0.01/cm sensors must be calibrated in low conductivity solutions, they are best calibrated against a referee meter and sensor in a closed system.

For more information about calibrating contacting conductivity sensors, refer to application sheet ADS 43-024, available on the Rosemount Analytical website.

Troubleshooting

Problem	Probable Cause	Solution
Off-Scale Reading	Wiring is wrong.	Verify wiring.
	Temperature element is open or shorted.	Check temperature element for open or short circuits. See Figure 16.
	Sensor is not in process stream.	Be sure sensor is completely submerged in process stream.
	Variopol cable is not properly seated.	Loosen connector and reseat.
	Sensor has failed.	Perform isolation checks. See Figure 17.
Noisy reading	Sensor is improperly installed in process stream.	Be sure sensor is completely submerged in process stream.
	Variopol cable is not properly seated.	Loosen connector and reseat.
Reading seems wrong (lower or higher than expected)	Bubbles trapped in sensor.	Be sure sensor is properly oriented in pipe or flow cell. See Figure 1. Apply back pressure to flow cell.
	Wrong temperature correction algorithm.	Check that temperature correction is appropriate for the sample. See analyzer manual for more information.
	Wrong cell constant.	Verify that the correct cell constant has been entered in the analyzer and that the cell constant is appropriate for the conductivity of the sample. See analyzer manual.
Sluggish response	Electrodes are fouled.	Clean electrodes.
	Sensor is installed in dead area in piping.	Move sensor to a location more representative of the process liquid.

Figure 16. Checking Temperature Element
Disconnect leads and measure resistance shown. The measured resistance should be close to the value in the table.

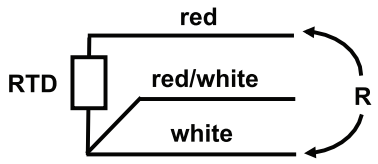

temperature °C	resistance in Ω	
	Pt 100	Pt 1000
0	100.0	1000
10	103.9	1039
20	107.8	1078
30	111.7	1117
40	115.5	1155
50	119.4	1194

Figure 17. Checking Continuity and Leakage
Disconnect electrode leads and measure resistance and continuity as shown. Sensor must be dry when checking resistance between electrode leads.

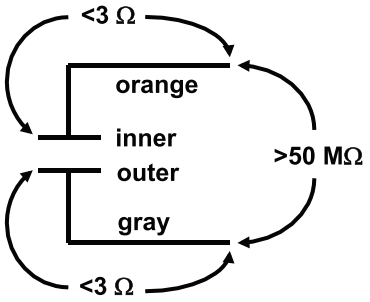

Notes

facebook.com/EmersonRosemountAnalytical

AnalyticExpert.com

twitter.com/RAIhome

youtube.com/user/RosemountAnalytical

Credit Cards for U.S. Purchases Only.

Emerson Process Management
2400 Barranca Parkway
Irvine, CA 92606 USA
Tel: (949) 757-8500
Fax: (949) 474-7250
rosemountanalytical.com

© Rosemount Analytical Inc. 2013

©2013 Rosemount Analytical, Inc. All rights reserved.

The Emerson logo is a trademark and service mark of Emerson Electric Co. Brand name is a mark of one of the Emerson Process Management family of companies. All other marks are the property of their respective owners.

The contents of this publication are presented for information purposes only, and while effort has been made to ensure their accuracy, they are not to be construed as warranties or guarantees, express or implied, regarding the products or services described herein or their use or applicability. All sales are governed by our terms and conditions, which are available on request. We reserve the right to modify or improve the designs or specifications of our products at any time without notice.

ROSEMOUNT® Analytical

EMERSON™ Process Management