Millennium Air Particle Monitor (APM)

Airborne Particle Monitor

The Millennium Air Particle Monitor (APM) is the only infrared optical monitor that is certified for use in hazardous areas for constant, reliable monitoring of ambient air for products of combustion such as smoke, oil mist, carbon, dust, and ash.

This unique product is explosion proof — ideally suited for a wide variety of industrial applications. Proven installed base includes Class I, Division 1 areas requiring accurate air particle monitoring such as air ducts, battery rooms, engine rooms, compressor stations, offshore living quarters, and HVAC air intake points.

- Explosion-proof, Class I, Division/Zone 1 approved
- Operating temperature range -40 °C to 75 °C
- 4–20 mA analog and relay output configurations
- Remote sensor separation - 600 m (2,000 ft) and a variety of duct mount assemblies available
- Intuitive menu system, zero in 60 seconds from start to finish
- Field adjustable sensitivity settings
- Not affected by high volume air velocity
- Multi-language, bright scrolling LED display allows operators to fine tune at installation site

The advanced sensor design has several performance features; it uses a powerful infrared lamp and no mirrors, making the optics resilient to the adverse effect of dirt. The instrument's field adjustable zero level of obscuration and multiple sensitivity settings allow for fine tuning to optimize performance and eliminate false alarms. Last, the sensor can be equipped with a duct mounting kit, pipe mounting kit, pipe extensions, and rain guard to suit many applications.

Millennium Air Particle Monitor (APM)

The Millennium Series controller is an innovative line of explosion proof industrial detectors. Its microcontroller provides fast, accurate, and continuous monitoring in hazardous area environments. The 4–20 mA analog signal and FORM-C mechanical relays easily integrate into industrial safety systems. The compact controller with power disconnect switch simplifies maintenance, a scrolling LED simplifies calibration and configuration, while meter jacks facilitate current loop monitoring.

The Millennium APM is market proven within a variety of specialized applications worldwide, providing superior performance and effectiveness.

Applications

Gas Compressor Stations, FSPO/Tanker Hull Chambers, Gas Turbine Engine Enclosures, Marine Battery Rooms, Engine Rooms, Duct Monitoring, Chemical Storage, Industrial Manufacturing, and HVAC Systems.

EMERSON
Process Management

Specifications

Table 1 - Millennium Air Particle Monitor (APM)

Millennium APM Sensor Specifications	
Temperature Range	-40 °C to 75 °C (-40 °F to 167 °F)
Weight	Aluminum: 1.5 lbs, 0.6 kg Stainless steel: 4.0 lbs, 1.8 kg
Enclosure Material	Aluminum (AL6061) or stainless steel (SS316)
Certifications	**North America** Class I, Division 1, Groups B, C, and D T5 AEx d IIB+H2 T5 (Class I, Zone 1, Groups IIB+H2 T5) **ATEX** (-X Model) CE 0575 Ex IIG Ex d IIB+H2 T5 IP65 –40 °C to +75 °C **IECEx** (-X Model) Ex d IIB+H2 T5 Gb IP65 –40 °C to +75 °C
Sensor Warranty	Two years

Millennium Transmitter/Controller		
Operating Voltage Range	10.5 to 32.0 VDC	
Power Consumption	150 mA (3.6 W) at 24 VDC	
Operating Temperature and Humidity Range	–40 °C to +85 °C (-40 °F to +185 °F) 0 to 95 % relative humidity, non-condensing	
Output(s)	**Analog 4–20 mA:** Max. loop impedance of 800 ohms at 32 VDC or 150 ohms at 10.5 VDC. Isolated or non-isolated loop supply	**Relays:** Three FORM-C contacts for Fault, window condition, and alarm status. Rated 5 A at 30 VDC/ 250 VAC energized/de-energized, latching/non-latching
Enclosure Material	Aluminum (AL6061) or stainless steel (SS316)	
Weight	Aluminum: 6.0 lbs, 2.6 kg Stainless steel: 7.0 lbs, 3.2 kg	
Warranty	Three years	
Alphanumeric Display	Bright 8-digit LED scrolling type display - English, French, and Spanish languages available	
Unique Features	Local power switch and meter test jacks on faceplate for easy maintenance Easy to read instructions for one-person, non-instrusive calibration	
Certifications	**North America** Class I, Division 1, Groups BCD, T4A Ex d IIB+H2 T5 (Class I, Zone 1 Group IIB+H2 T5) Type 4X **ATEX** (-X Model) CE 0575 Ex IIG Ex d IIB+H2 T5 IP64 -40 °C to +75 °C **IECEx** (-X Model) Ex d IIB+H2 T5 Gb -40 °C to +75 °C	

Table 2 - Ordering Information

MLP-AR-APM-OP-SEP	4–20 mA and Relay Outputs, APM Sensor with Separation Box included	Additional Approvals: –X (ATEX/IECEx) Enclosure Material: Stainless Steel (–SS) [Aluminum is Standard]
Ordering Matrix Example: **MLP-AR-APM-OP-SEP-X-S** (Transmitter - Output - Sensor - Separation Box - Additional Approval - Optional Enclosure Material)		

Specifications Continuation

Table 2 - Accessories

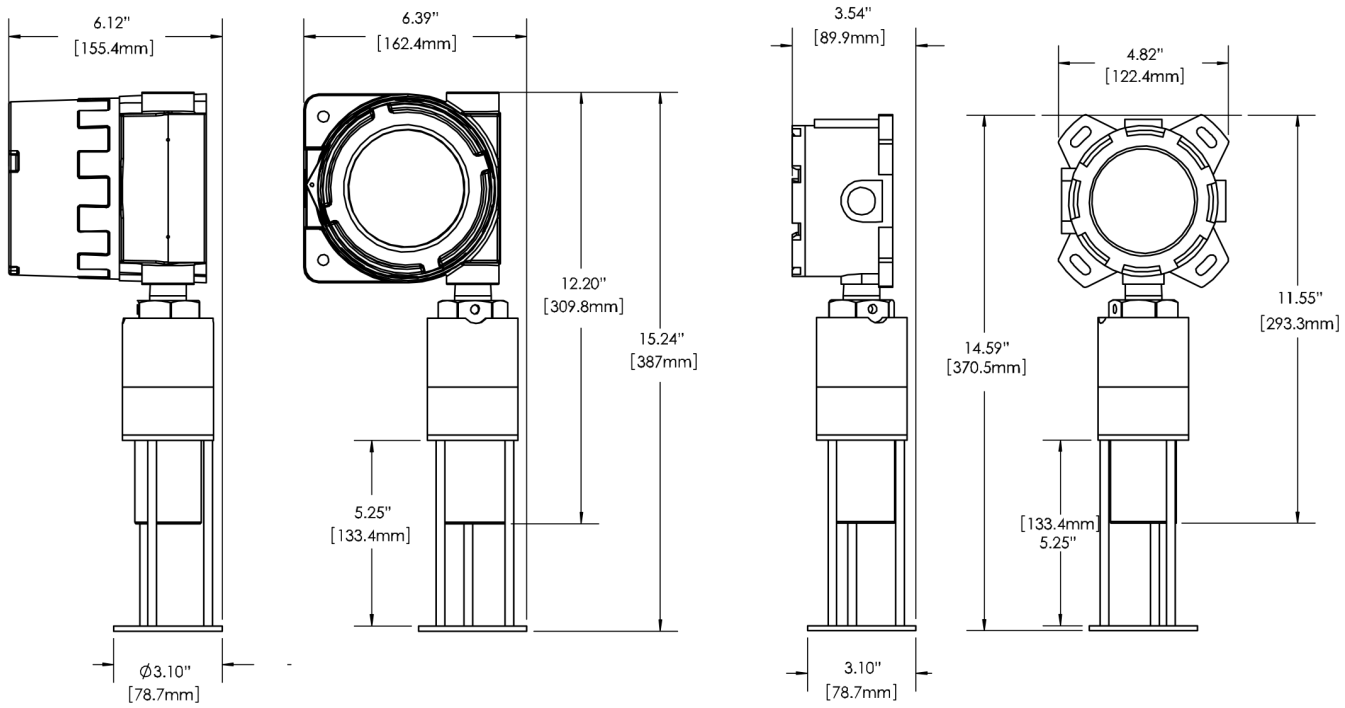

Accessories	
UN-MK-31	1" pipe mounting kit - stainless steel
UN-MK-32	2" pipe mounting kit - stainless steel
UN-MK-33	3" pipe mounting kit - stainless steel

SSK-51	1" pipe mounted sunshade kit/rain guard, stainless steel - includes UN-MK-31
SSK-52	2" pipe pounted sunshade kit/rain guard, stainless steel - includes UN-MK-32
SSK-53	3" pipe mounted sunshade kit/rain guard, stainless steel - includes UN-MK-33

UDM-001	Universal duct mount assembly with 1 m inlet sampling pipe, stainless steel
UDM-002	Universal duct mount assembly with 1.5 m inlet sampling pipe, stainless steel
UDM-003	Universal duct assembly, stainless steel

UDM-EX1	1 m extension - for use with UDM-001 and UDM-002, stainless steel
UDM-EX2	1.5 m extension - for use with UDM-001 and UDM-002, stainless steel

www.RosemountAnalytical.com

www.analyticexpert.com

www.youtube.com/user/RosemountAnalytical

www.twitter.com/RAIhome

www.facebook.com/EmersonRosemountAnalytical

Scan the QR code with your smartphone to go to our website.

©2015 Emerson Process Management. All rights reserved.

The Emerson logo is a trademark and service mark of Emerson Electric Co. All other marks are the property of their respective owners.

The contents of this publication are presented for information purposes only, and while effort has been made to ensure their accuracy, they are not to be construed as warranties or guarantees, express or implied, regarding the products or services described herein or their use or applicability. All sales are governed by our terms and conditions, which are available on request. We reserve the right to modify or improve the designs or specifications of our products at any time without notice.

Emerson Process Management
Flame & Gas Detection
2721 Hopewell Place NE
Calgary, Alberta, Canada T1Y 7J7
T + 1 (403) 219 0688
T +1 866 347 3427
F +1 (403) 219 0694
safety.csc@emerson.com
www.emersonprocess.com/safety

EMERSON
Process Management