User Manual
00809-0800-4975

Flame Simulator: FS-UVIR-975

ROSEMOUNT™

EMERSON™
Process Management

Legal Notice

The Flame Detector described in this document is the property of Rosemount.

No part of the hardware, software, or documentation may be reproduced, transmitted, transcribed, stored in a retrieval system, or translated into any language or computer language, in any form or by any means, without prior written permission of Rosemount.

While great efforts have been made to ensure the accuracy and clarity of this document, Rosemount assumes no liability resulting from any omissions in this document of from misuse of the information obtained herein. The information in this document has been carefully checked and is believed to be entirely reliable with all of the necessary information included. Rosemount reserves the right to make changes to any products described herein to improve reliability, function, or design and reserves the right to revise this document and make changes from time to time in content hereof with no obligation to notify any persons of revisions or changes. Rosemount does not assume any liability arising out of the application or any use of any product or circuit described herein; neither does it convey license under its patent rights or the rights of others.

⚠ WARNING!

This manual should be read carefully by all individuals who have or will have responsibility for using, maintaining, or servicing the product.
The Detector is not field repairable due to the meticulous alignment and calibration of the sensors and the respective circuits. Do not attempt to modify or repair the internal circuits or change their settings, as this will impair the system's performance and void the Rosemount product warranty.

Warranty

1. **Limited Warranty** . Subject to the limitations contained in Section 10 (Limitation of Remedy and Liability) herein, Seller warrants that (a) the licensed firmware embodied in the Goods will execute the programming instructions provided by Seller; (b) that the Goods manufactured by Seller will be free from defects in materials or workmanship under normal use and care; and (c) Services will be performed by trained personnel using proper equipment and instrumentation for the particular Service provided. The foregoing warranties will apply until the expiration of the applicable warranty period. Sensors and detectors are warranted against defective parts and workmanship for 24 months from the date of purchase and other electronic assemblies for 36 months from the date of purchase. Products purchased by Seller from a third party for resale to Buyer (**Resale Products**) shall carry only the warranty extended by the original manufacturer. Buyer agrees that Seller has no liability for Resale Products beyond making a reasonable commercial effort to arrange for procurement and shipping of the Resale Products. If Buyer discovers any warranty defects and notifies Seller thereof in writing during the applicable warranty period, Seller shall, at its option, (i) correct any errors that are found by Seller in the firmware or Services; (ii) repair or replace FOB point of manufacture that portion of the Goods found by Seller to be defective; or (iii) refund the purchase price of the defective portion of the Goods/Services. All replacements or repairs necessitated by inadequate maintenance; normal wear and usage; unsuitable power sources or environmental conditions; accident; misuse; improper installation; modification; repair; use of unauthorized replacement parts; storage or handling; or any other cause not the fault of Seller, are not covered by this limited warranty and shall be replaced or repaired at Buyer's sole expense and Seller shall not be obligated to pay any costs or charges incurred by Buyer or any other party except as may be agreed upon in writing in advance by Seller. All costs of dismantling, reinstallation, freight and the time and expenses of Seller's personnel and representatives for site travel and diagnosis under this limited warranty clause shall be borne by Buyer unless accepted in writing by Seller. Goods repaired and parts replaced by Seller during the warranty period shall be in warranty for the remainder of the original warranty period or 90 days, whichever is longer. This limited warranty is the only warranty made by Seller and can be amended only in a writing signed by an authorized representative of Seller. The limited warranty herein ceases to be effective if Buyer fails to operate and use the Goods sold hereunder in a safe and reasonable manner and in accordance with any written instructions from the manufacturers. THE WARRANTIES AND REMEDIES SET FORTH ABOVE ARE EXCLUSIVE. THERE ARE NO REPRESENTATIONS OR WARRANTIES OF ANY KIND, EXPRESS OR IMPLIED, AS TO MERCHANTABILITY, FITNESS FOR PARTICULAR PURPOSE OR ANY OTHER MATTER WITH RESPECT TO ANY OF THE GOODS OR SERVICES.
2. **Limitation of Remedy and Liability** SELLER SHALL NOT BE LIABLE FOR DAMAGES CAUSED BY DELAY IN PERFORMANCE. THE REMEDIES OF BUYER SET FORTH IN THE AGREEMENT ARE EXCLUSIVE. IN NO EVENT, REGARDLESS OF THE FORM OF THE CLAIM OR CAUSE OF ACTION (WHETHER BASED IN CONTRACT, INFRINGEMENT, NEGLIGENCE, STRICT LIABILITY, OTHER TORT OR OTHERWISE), SHALL SELLER'S LIABILITY TO BUYER AND/OR BUYER'S CUSTOMERS EXCEED THE PRICE TO BUYER OF THE SPECIFIC GOODS MANUFACTURED OR SERVICES PROVIDED BY SELLER GIVING RISE TO THE CLAIM OR CAUSE OF ACTION. BUYER AGREES THAT IN NO EVENT SHALL SELLER'S LIABILITY TO BUYER AND/OR BUYER'S CUSTOMERS EXTEND TO INCLUDE INCIDENTAL, CONSEQUENTIAL OR PUNITIVE DAMAGES. THE TERM "CONSEQUENTIAL DAMAGES" SHALL INCLUDE, BUT NOT BE LIMITED TO, LOSS OF ANTICIPATED PROFITS, REVENUE OR USE AND COSTS INCURRED INCLUDING WITHOUT LIMITATION FOR CAPITAL, FUEL AND POWER, AND CLAIMS OF BUYER'S CUSTOMERS.

Release History

Revision	Date	Revision History
A	March 2016	First release

Contents

Chapter 1 Introduction 1
1.1 Model and types 1
1.2 Features and benefits 2
1.3 Principles of Operation 2
1.4 Simulator status 2
1.5 Product Certification 3
1.6 Simulator structure 3
1.7 Certification instructions 6

Chapter 2 Operation Instructions 9
2.1 Ordering information 9
2.2 Unpacking 9
2.3 Operating instructions 10
2.4 Detection ranges per detector / flame simulator 10
2.5 Charging the battery 11
2.6 Replacing the battery 12
2.7 Maintenance 12
2.8 Troubleshooting 13
2.9 Technical specifications 13
2.9.1 General specifications 13
2.9.2 Electrical Specifications 13
2.9.3 Physical specifications 13
2.9.4 EMI compatibility 14

Chapter 3 Technical Support 15

1 Introduction

Topics covered in this chapter:

- *Model and types*
- *Features and benefits*
- *Principles of Operation*
- *Simulator status*
- *Product Certification*
- *Simulator structure*
- *Certification instructions*

To comply with local standards and jurisdictional authorities, *end-to end* loop testing of fire protection alarm systems, including detectors, should be performed periodically. Many safety authorities and plant managers of high value / high risk assets and facilities insist on quarterly *end-to end* testing of their entire fire protection systems using an external flame simulator.

Rosemount Flame Simulators emit electromagnetic radiation in a unique sequential pattern corresponding to and recognizable as fire by the specific Rosemount 975 Flame Detector model. This allows the detector to be tested under real fire conditions without the associated risk of an open flame. Rosemount Flame Simulators are ATEX certified EExd for use in Zone 1 and Zone 2, hazardous areas and are powered by rechargeable lithium ion batteries. When fully charged, the Flame Simulator will operate for at least 100 tests without recharging.

Using an external, portable Rosemount Flame Simulator is the best means to perform a full, functional *end-to-end* test of the detector and the fire protection system without the need to start a real fire (which is not permitted in hazardous areas and can be dangerous in non-hazardous areas). The Rosemount Flame Simulator is the only non-hazardous and safe method to test the Flame Detector's sensors, internal electronics, alarm activation software, cleanliness of the viewing window/lens, wiring integrity, actual relay activation, and proper functionality of any other outputs used (mA, RS-485, HART).

1.1 Model and types

The FS-UVIR-975 Flame Simulator is compatible with different detector types:

Table 1-1: Flame simulator compatibility

Simulator	P/N	Compatible with:
Ultraviolet Infrared Flame Simulator	FS-UVIR-975	975UF, 975UR

1.2 Features and benefits

- Used for maintenance and testing of flame detectors
- Can activate the flame detector from a distance of up to 7 m
- Includes rechargeable battery
- Operates at least 100 tests before recharging the battery

1.3 Principles of Operation

The FS-UVIR-975 includes a halogen lamp that emits UV and IR energy. This energy is accumulated by a reflector directed towards the detector.

The FS-UVIR-975 does not include a laser diode, only a mechanical sight; you can see the spot from the simulator and should aim the spot at the center of the detector.

1.4 Simulator status

The status is defined by the halogen light.

Normal status

At normal, the light flashes for fifty seconds. The simulator cannot then be operated for twenty seconds (delay between activations).

Fault status

If the light does not turn on, this indicates one of three possible faults.

1. Low battery
2. Halogen fault
3. Total failure

1.5 Product Certification

The Flame Simulator is certified to ATEX and IECEx

Ex II 2 G

Ex d ib op is IIB + H_2 T5 Gb

-4 °F to 122 °F (-20 °C to 50 °C)

This product is suitable for use in hazardous zones 1 and 2 with IIB + H_2 gas group vapor present.

1.6 Simulator structure

The Flame Simulator is built from black coated aluminum housing. It includes:

- Reflector
- Electronic chamber
- Battery chamber
- Handle

The electronic chamber includes a PC board with an IR or halogen lamp, which is assembled on the PC board, that emits the light through a sapphire window.

The battery chamber includes a battery pack containing four lithium ion batteries of total 14.8 Vdc and 2.2 AH.

The battery pack can be replaced easily by opening the back cover. This exchange must be done in a safe area, using only a Rosemount battery pack, P/N 00975-9000-0012.

Figure 1-1: Flame simulator side view

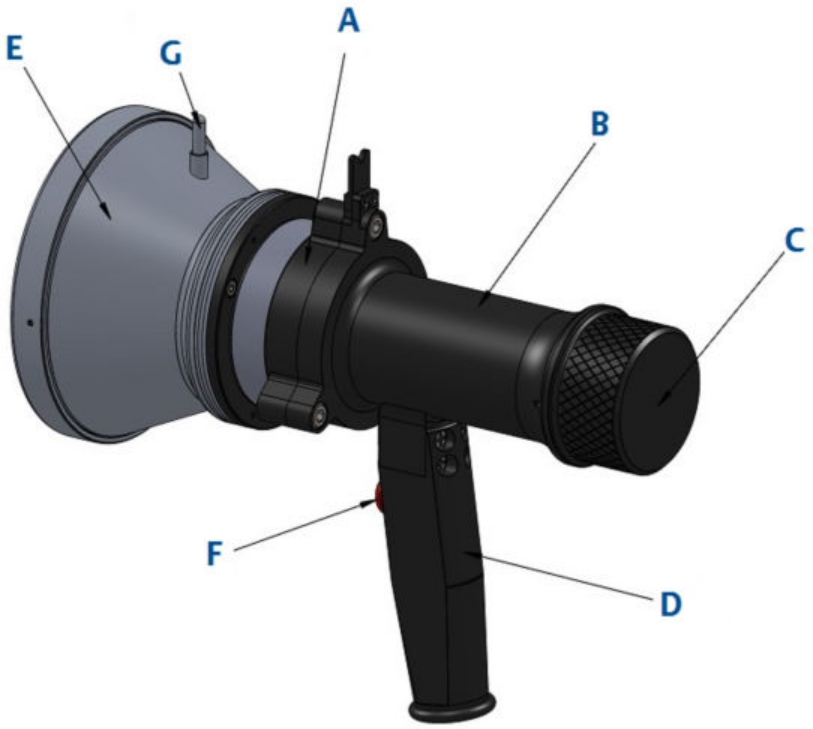

A. Electronic chamber
B. Battery chamber
C. Battery back cover
D. Handle
E. Reflector
F. Push button
G. Sight

Figure 1-2: Flame simulator rear view

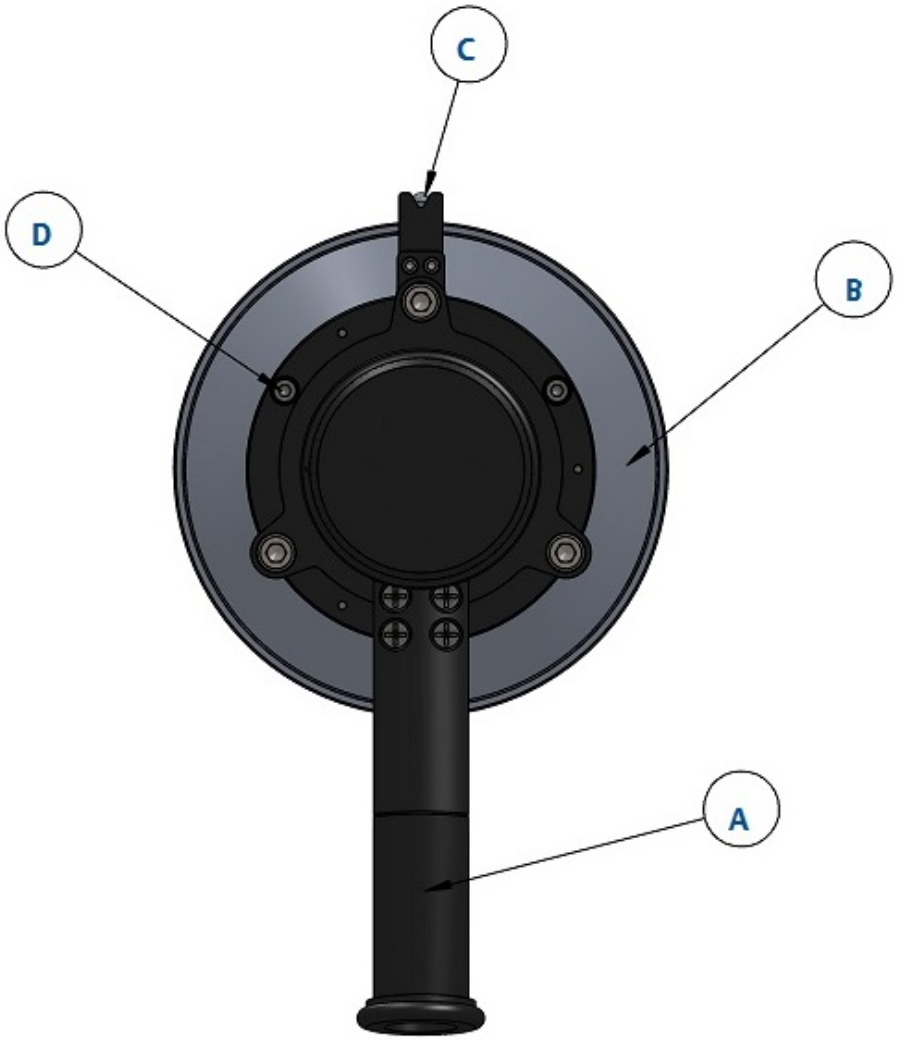

A. Handle
B. Reflector
C. Sight
D. Back cover locking screw

Figure 1-3: Flame simulator front view

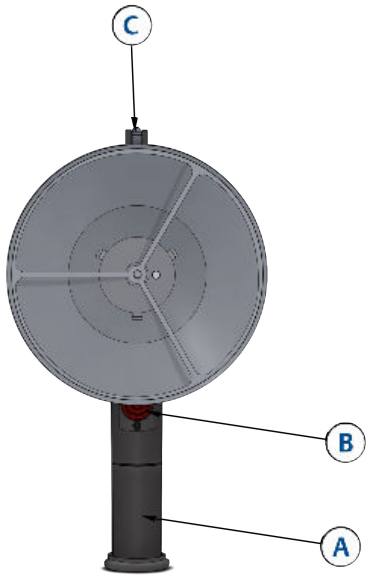

A. Handle
B. Push button
C. Sight

1.7 Certification instructions

The marking of the equipment is:

Ex II 2 G

Ex d ib op is IIB + H_2 T5 Gb

-4 °F to 122 °F (-20 °C to 50 °C)

The manufacturer/importer/repair site is Rosemount Inc. at 8200 Market Blvd., Chanhassen, MN, U.S.A.

The equipment may be used with flammable gases and vapors with apparatus groups IIA and IIB + H_2 T5 in the ambient temperature range of -4 °F to 122 °F (-20 °C to 50 °C).

The dimensions of the flameproof joints are other than the relevant minimum or maximum values required by Table 2 of IEC/EN 60079-1:2007 for IIB + H_2, as detailed below.

Table 1-2: Minimum and maximum widths

Flamepath description	Type of joint	Minimum width *L* (mm)	Maximum gap *ic* (mm)
Joint formed by window against the enclosure	Flanged	10.75	0.02

Table 1-2: Minimum and maximum widths *(continued)*

Flamepath description	Type of joint	Minimum width *L* (mm)	Maximum gap *ic* (mm)
Enclosure end-cap spigot	Cylindrical	15	0.08

Gaps must not be machined to be any larger than the values of *ic*, and width must not be modified to be any smaller than the values of *L* shown in the table above.

The equipment must only be charged in a safe area with the batteries removed from the flameproof enclosure. The charge conditions are as follows:

Maximum charge voltage: 4.2 V per cell

Maximum charge current: 2,200 mA

The charge voltage must not exceed these values.

Inspection and maintenance of this equipment should be carried out by suitable trained personnel, in accordance with the applicable code of practice, e.g. EN 60079-17.

Repair of this equipment should be carried out by suitable trained personnel, in accordance with the applicable code of practice, e.g. EN 60079-19.

The certification of this equipment relies upon the following materials used in its construction

Enclosure: aluminum 6061T6

Window: sapphire glass

Seals: EPDM

If the equipment is likely to come into contact with aggressive substances (described below), then it is your responsibility to take suitable precautions (described below) to prevent the equipment from being adversely affected, thus ensuring that the type of protection provided by the equipment is not compromised.

Aggressive substances: for example, acidic liquids, gases that may attack metals, or solvents that may affect polymeric materials

Suitable precautions: for example, regular checks as part of routine inspections or establishing from the material's data sheet that it is resistant to specific chemicals.

2 Operation Instructions

Topics covered in this chapter:

- *Ordering information*
- *Unpacking*
- *Operating instructions*
- *Detection ranges per detector / flame simulator*
- *Charging the battery*
- *Replacing the battery*
- *Maintenance*
- *Troubleshooting*
- *Technical specifications*

2.1 Ordering information

The P/N of the Flame Simulator kit is 00975-9000-0010.

The kit is supplied in a carry case that includes:

1. Flame Simulator: FS-UVIR-975
2. Charger
3. Tool kit
4. Technical manual: 00809-0800-4975

2.2 Unpacking

Verify that you have received the following content:

- Delivery form
- Flame Simulator with integral battery
- Battery charger
- Tool keys
- User manual
- Factory acceptance test (FAT) forms
- EC declaration
- Storage case

2.3 Operating instructions

⚠ WARNING!

Do not open the Flame Simulator to charge the batteries or for any other reason in a hazardous area.

⚠ CAUTION!

The following test simulates a real fire condition and may activate the extinguishing system or other alarms. If this is not desired, disconnect/inhibit them before the test and reconnect after the simulation.

1. Verify that you are using the correct simulator that fits the tested detector per the following table:

Table 2-1: Flame Simulator compatibility

Simulator	Compatible with
FS-UVIR-975	975UF, 975UR

2. Verify that you are at the correct distance from the detector according to the type of detector (see *Table 2-2*) and the detector sensitivity.
3. Aim the Flame Simulator using the mechanical sight at the center of the detector. Activate the button and adjust the spot to the center of the detector.
4. Keep the simulator aimed at the detector for up to fifty seconds until you receive an alarm.
5. Wait twenty seconds before repeating the test.

2.4 Detection ranges per detector / flame simulator

Table 2-2: Detection ranges per detector / flame simulator

Model	Detector types	Detector sensitivity settings	Testing distance
FS-UVIR-975	975 UR	50 ft. (15 m)	8 ft. (2.5 m)
	975 UF	60 ft. (20 m)	23 ft. (7 m)

Notes

- The minimum distance from the detector is 30 in. (75 cm).
- At extreme temperatures, there is a 15% reduction in the testing range.

Important

Keep the Flame Simulator in a safe place when not in use.

2.5 Charging the battery

The Flame Simulator uses lithium ion batteries as a rechargeable power source. When the batteries are fully charged, the simulator operates at least 100 times without recharging. When the voltage from the batteries is lower than the required operational level, the simulator will not operate.

To charge the battery:

1. Place the Flame Simulator on a table in a safe area not exceeding 104 °F (40 °C).
2. Release the locking screw (Item D, *Figure 1-2*).
3. Unscrew the battery back cover (Item C, *Figure 1-1*) counter-clockwise.
4. Unscrew the locking disc clockwise (Item C, *Figure 2-1*).
5. Pull out the battery from the Flame Simulator.
6. Connect the battery to the charger. Verify that the charger is the one supplied with the Flame Simulator model FRIWO MPP15 with max. charging voltage 16.8 V (4.2 V x 4) with max. current of 700 mA.
7. Charge for a maximum of two to three hours, until the green LED on the charger turns on.
8. Disconnect the charger.
9. Insert the battery to the Flame Simulator.
10. Screw the locking disc (Item C, *Figure 2-1*).
11. Screw the back cover (Item C, *Figure 1-1*).
12. Lock the back cover with the locking screw (Item D, *Figure 1-2*).

2.6 Replacing the battery

1. Place the Flame Simulator on a table in a safe area not exceeding 104 °F (40 °C).
2. Release the locking screw (Item D, *Figure 1-2*).
3. Unscrew the battery back cover (Item C, *Figure 1-1*).
4. Unscrew the locking disc clockwise (Item C, *Figure 2-1*).
5. Pull out the battery from the Flame Simulator.
6. Insert the new battery pack in the simulator housing. Use only Rosemount battery pack, P/N 00975-9000-0012.
7. Screw the locking disc (Item C, *Figure 2-1*).
8. Screw the back cover (Item C, *Figure 1-1*).
9. Lock the back cover with the locking screw (Item D, *Figure 1-2*).

Figure 2-1: Flame Simulator battery replacement

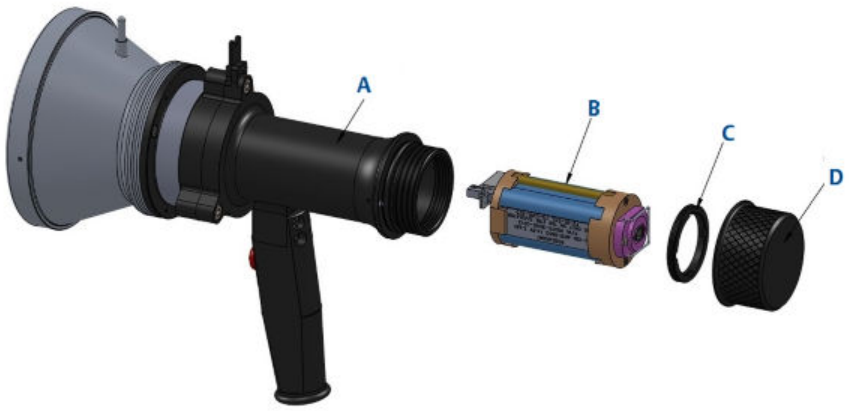

A. Simulator
B. Battery pack
C. Locking disc
D. Back cover

2.7 Maintenance

- Ensure the Flame Simulator is charged before operation.
- Ensure the reflector and the window are clean.
- Before replacing the battery, ensure that you have a Rosemount battery pack, P/N 00975-9000-0012.
- When the simulator is not in use, recharge at least every six months.

⚠ WARNING!

Use only Rosemount replacement battery pack, P/N 00975-9000-0012.

2.8 Troubleshooting

Table 2-3: Troubleshooting

Model	Problem	Solution
FS-UVIR-975	The light does not turn on.	1. Recharge the battery. 2. Replace the battery. 3. Send the Flame Simulator for repair.
	The Flame Simulator seems to work properly but does not activate the Flame Detector.	1. Verify that you are at the correct distance. 2. Verify that the Flame Detector is at the correct sensitivity. 3. Verify that the Flame Detector is operating. 4. Verify that the Flame Detector window and/or reflector are clean.

2.9 Technical specifications

2.9.1 General specifications

Temperature range: 32 °F to 122 °F (0 °C to 50 °C).

Vibration protection: 1 g (10 - 50 Hz)

2.9.2 Electrical Specifications

Power: 14.8 V (4 x 3.7 V rechargeable lithium ion battery)

Max current: 4 A

Battery capacity: 2.2 AH

Charging time: 2 hours at 2 A

2.9.3 Physical specifications

Dimensions: 9 x 7.3 x 5.35 in. (230 x 185 x 136 mm)

Weight: 5.5 lb. (2.5 kg)

Enclosure: aluminum, heavy duty copper free, black zinc coating

Explosion proof enclosure:

ATEX and IECEx
Ex II G D
Ex id op is IIB + H_2 T5 Gb
Ex ib op is tb IIICT 135 °C Db
-4 °F to 122 °F (-20 °C to 50 °C)

Water and dust tight: IP65

2.9.4 EMI compatibility

Table 2-4: Immunity tests

Title	Basic standard	Level to be tested
Electrostatic discharge (ESD)	IEC 61000-4-2	6 kV / 8 kV contact/air
Radiated electromagnetic field	IEC 61000-4-3	20 V/m (80 MHz to 1 GHz) 10 V/m (1.4 GHz to 2 GHz) 3 V/m (2.0 GHz to 2.7 GHz)
Conducted disturbances	IEC 61000-4-6	10 Vrms (150 kHz to 80 MHz)
Immunity to main supply voltage variations	MIL-STD-1275B	

Table 2-5: Emission test

Title	Basic standard	Level to be tested	Class
Radiated emission	IEC 61000-6-3	40 dbuv/m (30 MHz - 230 MHz), 47 dbuv/m (230 MHz - 1 GHz)	Like Class B of EN 55022

3 Technical Support

For all technical assistance or support contact:

Emerson Process Management

6021 Innovation Boulevard

Shakopee, MN 55379-9795

U.S.A.

T +1 866 347 3427

F +952 949 7001

SAFETY.CSC@Emerson.com

00809-0800-4975

www.EmersonProcess.com/FlameGasDetection
Rosemount
6021 Innovation Blvd.
Shakopee, MN 55379
Toll Free + 866 347 3427
F +1 952 949 7001
safety.csc@emerson.com
www.EmersonProcess.com/FlameGasDetection
EUROPE
Emerson Process Management
Neuhofstrasse 19a P.O. Box 1046
CH-6340 Baar
Switzerland
T + 41 (0) 41 768 6111
F + 41 (0) 41 768 6300
safety.csc@emerson.com
www.EmersonProcess.com/FlameGasDetection
MIDDLE EAST AND AFRICA
Emerson Process Management
Emerson FZE
Jebel Ali Free Zone
Dubai, United Arab Emirates, P.O. Box 17033
T +971 4 811 8100
F +971 4 886 5465
safety.csc@emerson.com
www.EmersonProcess.com/FlameGasDetection
ASIA-PACIFIC
Emerson Process Management
Asia Pacific Private Limited
1 Pandan Crescent
Singapore 128461
Singapore
T +65 777 8211
F +65 777 0947
safety.csc@emerson.com
www.EmersonProcess.com/FlameGasDetection

©2016 Rosemount. All rights reserved.

The Emerson logo is a trademark and service mark of Emerson Electric Co. Rosemount is a mark of one of the Emerson Process Management family of companies. All other marks are the property of their respective owners. The contents of this publication are presented for information purposes only, and, while effort has been made to ensure their accuracy, they are not to be construed as warranties or guarantees, express or implied, regarding the products or services described herein or their use or applicability. All sales are governed by our terms and conditions, which are available on request. We reserve the right to modify or improve the designs or specifications of our products at any time without notice.

ROSEMOUNT™

EMERSON™
Process Management