Power Company accurately measures air flow in large ducts and increases generation efficiency

RESULTS

- Reduced fuel cost
- Reduced heat rate
- Reduced project cost
- Reduced utility cost
- Increased megawatt generation

The Annubar® flow element was introduced as a cost effective way to increase megawatt generation and reduce fuel cost.

APPLICATION

Airflow profile in large rectangular ducts

APPLICATION CHARACTERISTICS

Large diameter rectangular duct with irregular flow profile and short straight run

CUSTOMER

Large power plant in the USA

CHALLENGE

The customer needed a way to accurately measure airflow in order to improve combustion efficiency and reduce emissions. In th past, power plant was inferring secondary airflow from fan curves. These inferred measurements were as much as 25% accurate at times.

The rectangular duct measured 4-ft. by 5-ft. making traditional measurement technologies such as nozzles very expensive. In addition the large duct cross section and short straight duct runs created high variability in the flow profile across the duct.

Lack of accurate airflow measurement resulted in excess combustion air being used to limit emissions. This lead to excess fuel consumption to heat the excess air. It also reduced combustion temperatures leading to a higher heat rate. In addition, higher airflow rates lead to higher utility costs to run the fans.

SOLUTION

The Rosemount Annubar flow element was introduced as a cost effective way to achieve accurate flow measurement in this difficult application. Because the ducting was large and rectangular, it was recommended that two flow elements be placed parallel to each other across the shorter span of the duct. This would allow a larger section of the flow profile to be sampled.

ROSEMOUNT®

For more information:
www.rosemount.com

EMERSON™
Process Management

© 2014 Rosemount Inc. All rights reserved

The flow consultant also recommended that a pitot traverse be performed to determine the true nature of the flow. In certain applications where the duct is irregular or there is a disturbance upstream of the flow element, it is good practice to perform an inline calibration to understand the flow profile and calculate a correct K factor. This involves sampling the flow at multiple points and under varying flow rates using a single point pitot tube. Using this technique, the true nature of the flow profile can be determined.

Figure 1 shows the flow elements and the traverse test points in the duct. Using a single point pitot (Figure 2), the field service personnel were able to verify a flow coefficient for the Annubar and offer the customer an accuracy of ±5%.

The customer achieved many positive business results. First, fuel consumption was reduced by 10%. By reducing excess combustion air, heat rate was also reduced. Finally, by lowering the demand on the fans, utility costs were reduced and the utility was able to increase megawatt generation to the grid.

Figure 1

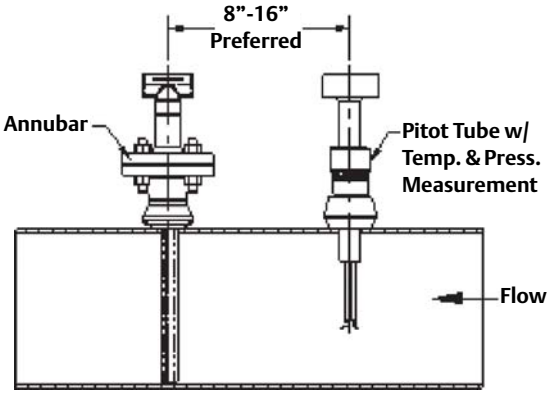

Figure 2

RESOURCES

Emerson Process Management Power Industry

http://www.emersonprocess.com/solutions/power/

Rosemount Annubar® Flowmeter Series

http://www2.emersonprocess.com/en-US/brands/rosemount/Flow/DP-Flow-Products/Annubar-Flowmeters/Pages/index.aspx

The Emerson logo is a trade mark and service mark of Emerson Electric Co.
Rosemount and the Rosemount logotype are registered trademarks of Rosemount Inc.
All other marks are the property of their respective owners.

Emerson Process Management
Rosemount Division
8200 Market Boulevard
Chanhassen, MN 55317 USA
T (U.S.) 1-800-999-9307
T (International) (952) 906-8888
F (952) 949-7001
www.rosemount.com

Emerson Process Management
Heath Place
Bognor Regis
West Sussex PO22 9SH,
England
T 44 1243 863121
F 44 1243 867554

Emerson Process Management
Emerson Process Management Asia Pacific
Private Limited
1 Pandan Crescent
Singapore 128461
T (65) 6777 8211
F (65) 6777 0947
Enquiries@AP.EmersonProcess.com

ROSEMOUNT®

For more information:
www.rosemount.com

EMERSON™
Process Management

00830-0500-4809, Rev CB