ROSEMOUNT 702 WIRELESS TEMPERATURE TRANSMITTER

REVISION TABLE			
REVISION	ECO NO.	APP'D	DATE
AC	RTC1060444	JV	6/30/14
DESCRIPTION			
CHANGE UP BRACKET MOUNTING			

SHOWN WITH 2.4 GHz/WIRELESS HART EXTENDED RANGE ANTENNA

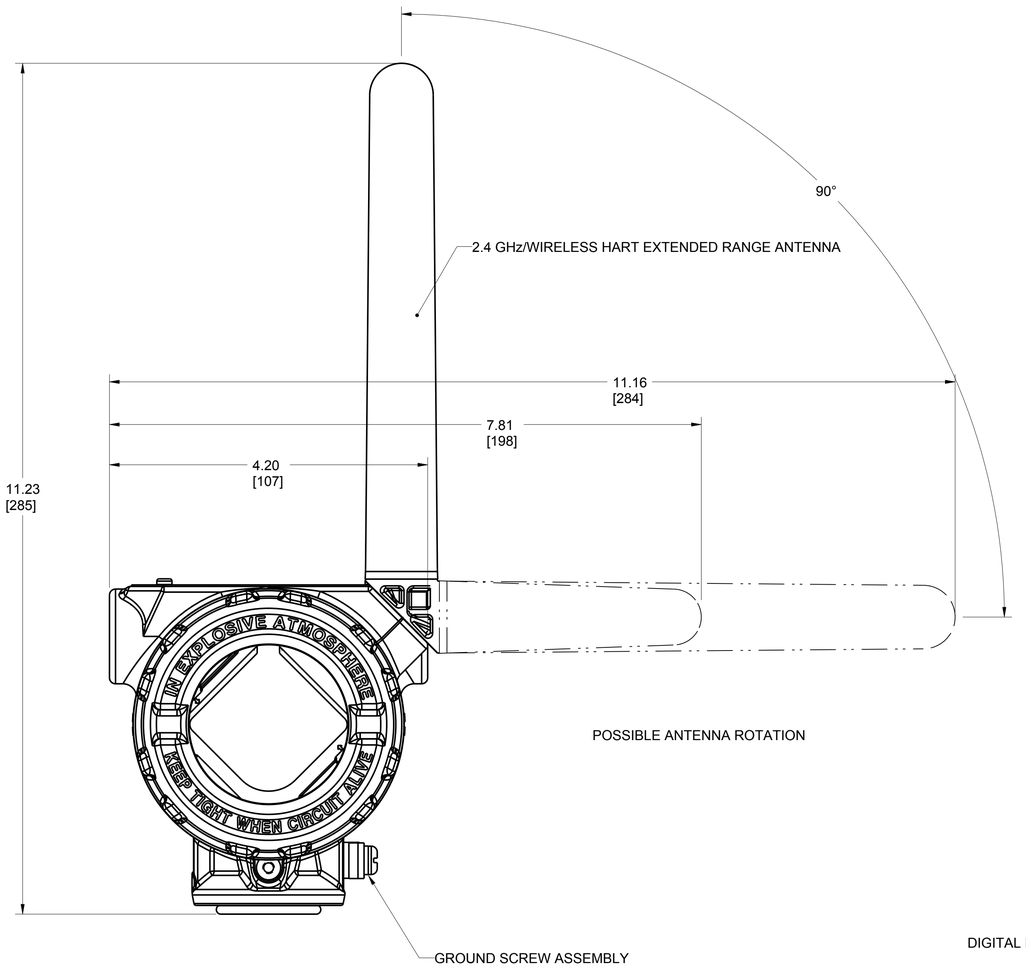

SHOWN WITH OPTIONAL DIGITAL DISPLAY
AND 2.4 GHz/WIRELESS HART ANTENNA

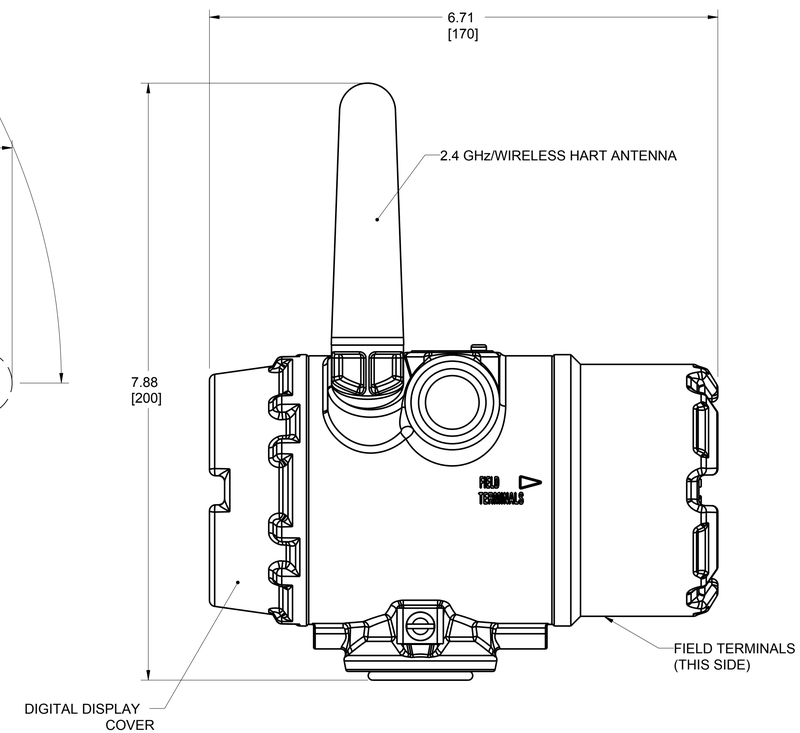

SHOWN WITHOUT OPTIONAL DIGITAL DISPLAY

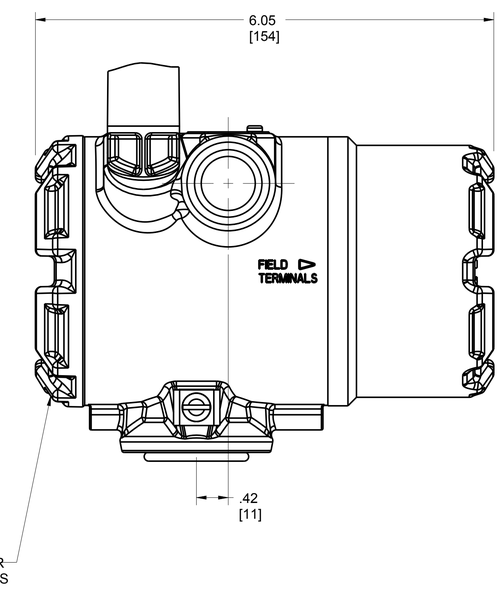

2. .75 [19] CLEARANCE REQUIRED TO REMOVE COVERS.

1. ROSEMOUNT INC. CERTIFIES THESE DRAWINGS ARE IN ACCORDANCE WITH ROSEMOUNT ENGINEERING SPECIFICATIONS AND ACCURATELY REPRESENT THE EQUIPMENT FURNISHED.

NOTES:

UNLESS OTHERWISE SPECIFIED DIMENSIONS IN INCHES [MM]

CONFIDENTIAL AND PROPRIETARY INFORMATION IS CONTAINED HEREIN AND MUST BE HANDLED ACCORDINGLY. EMERSON.

INFORMATION WITHIN THIS DOCUMENT MAY CHANGE WITHOUT NOTICE. NOT INTENDED FOR ENGINEERING USE. REFERENCE ROSEMOUNT PRODUCT DATA SHEETS FOR ENGINEERING INFORMATION.

CUSTOMER	***
CUSTOMER DWG NO.	***
P.O. No.	***
S.O. No.	***
PROJECT NAME	***

EMERSON. Process Management — ROSEMOUNT®

3RD ANGLE | SIZE D | SCALE 1/1 | REV AC

TITLE: ROSEMOUNT 702 WIRELESS TEMPERATURE TRANSMITTER

DR.	JLA	6/30/14	DRAWING NO. 00702-7000
APP'D	J.VANDERAA	6/30/14	

DO NOT SCALE PRINT | CAD MAINTAINED, (PRO/E) | PRODUCT CODE - | DOC TYPE D | SHEET 1 OF 2

CAL. | TAG NO. | DRAWING NO. 00702-7000

F-DIM-REV.XX

ROSEMOUNT 702 WIRELESS TEMPERATURE TRANSMITTER
MOUNTING CONFIGURATION WITH OPTIONAL MOUNTING BRACKET

PIPE MOUNTING

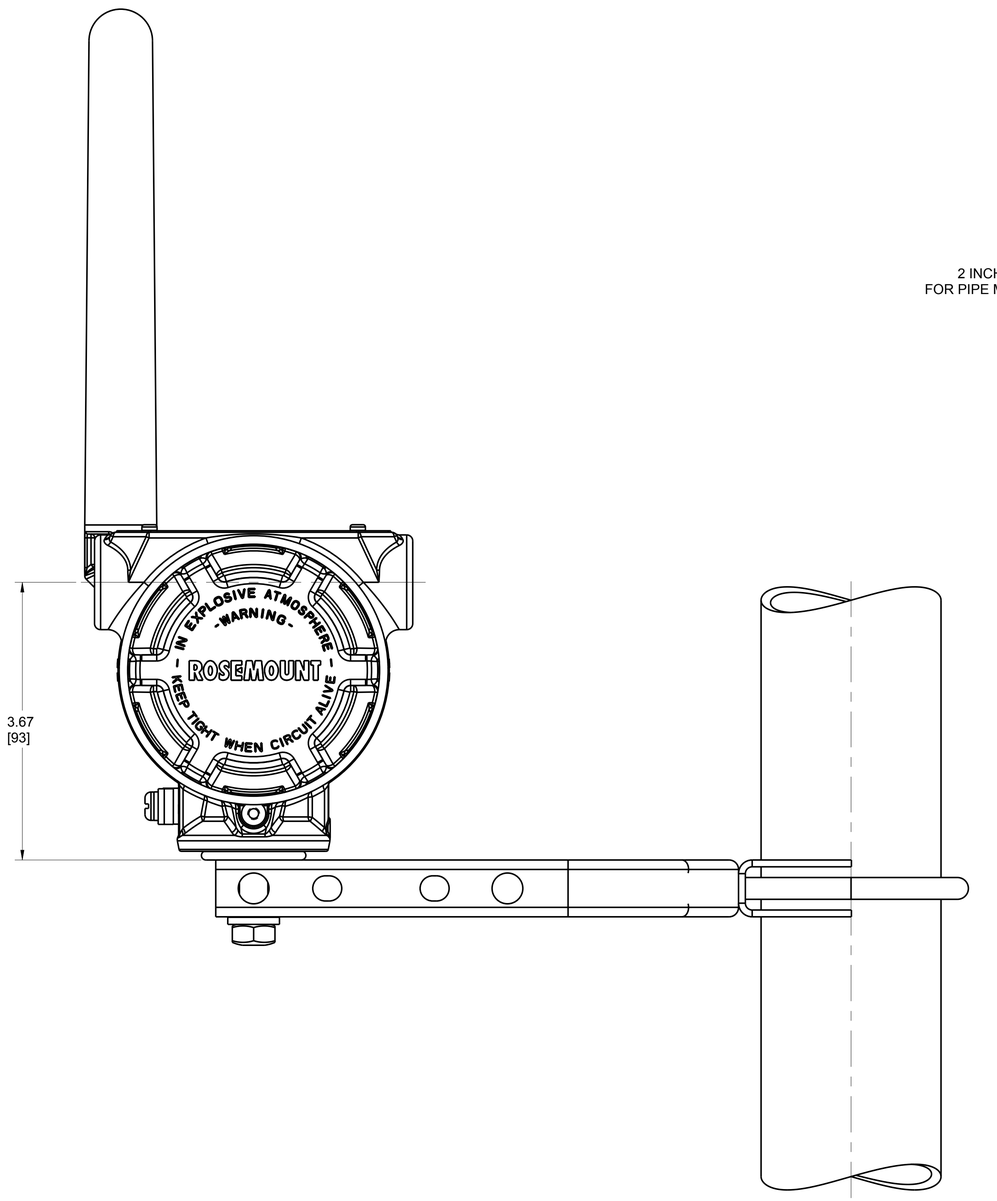

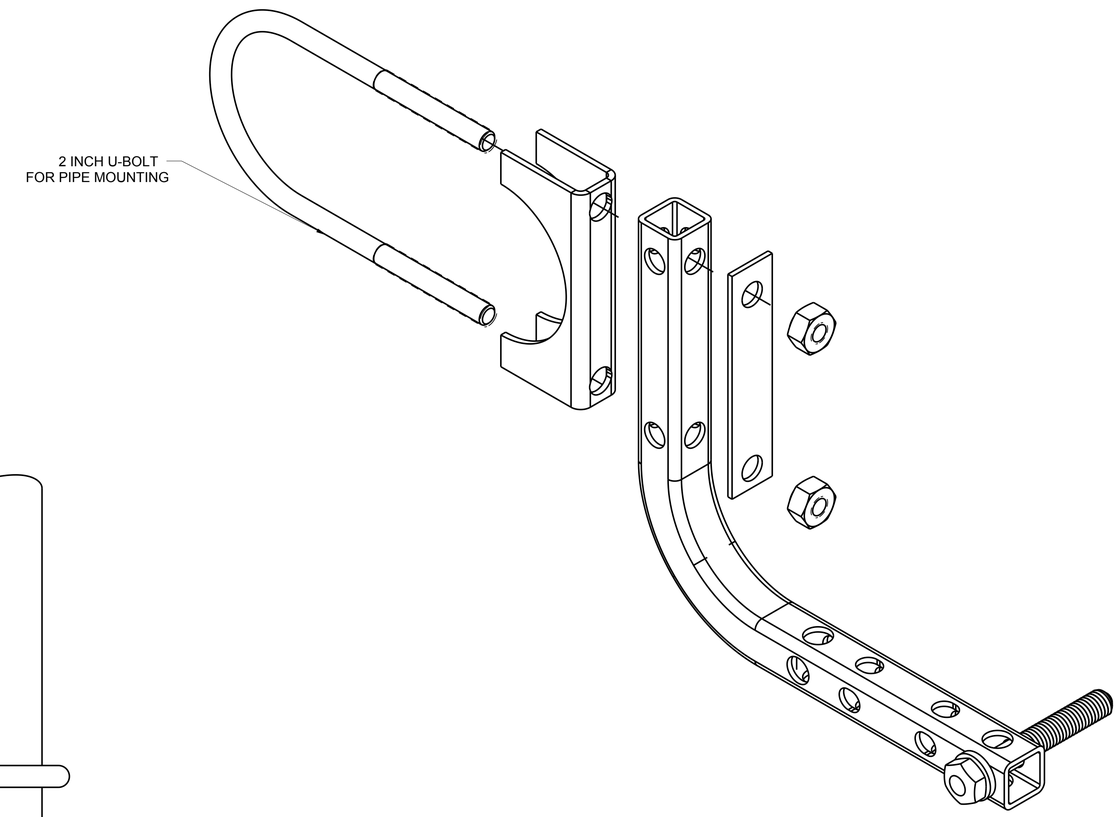

FOR TRANSMITTER MOUNTING

UNLESS OTHERWISE SPECIFIED DIMENSIONS IN MILLIMETERS	CUSTOMER	EMERSON. Process Management	ROSEMOUNT®
CONFIDENTIAL AND PROPRIETARY INFORMATION IS CONTAINED HEREIN AND MUST BE HANDLED ACCORDINGLY.	CUSTOMER DWG NO.	3RD ANGLE	SIZE D / SCALE 1/1 / REV. AC
INFORMATION WITHIN THIS DOCUMENT MAY CHANGE WITHOUT NOTICE. NOT INTENDED FOR ENGINEERING USE. REFERENCE ROSEMOUNT PRODUCT DATA SHEETS FOR ENGINEERING INFORMATION.	P.O. No.	TITLE	ROSEMOUNT 702 WIRELESS TEMPERATURE TRANSMITTER
	S.O. No.		
	PROJECT NAME	DR. JLA 6/30/14	DRAWING NO. 00702-7000
		APP'D J.VANDERAA 6/30/14	
	DO NOT SCALE PRINT / CAD MAINTAINED, (PRO/E)	PRODUCT CODE -	DOC TYPE D / SHEET 2 OF 2

CAL.

TAG NO.

DRAWING NO. 00702-7000

FORM 1001 UA