Configuration Data Sheet

Calculations conducted per ASME/ANSI PTC 19.3 but with Strouhal number varying with Reynolds number. Please complete and fax to appropriate locations at the bottom of this form.

Company Information

Requesting Company: Phone: Fax:
Contact Tag Number
End Customer Date of Request:

Thermowell Information (Information for either (a), (b), (c), or (d) required)

a) Rosemount Thermowell Part Number (example 00079-0834-1321):
b) Rosemount Sensor Model Number (example 0078R21C30A120F54):
c) Customer Drawing Number
d) Generic Thermowell Information:

Thermowell Material:
Stem Style: ❒ Straight ❒ Stepped ❒ Tapered
Mounting Style: ❒ Threaded ❒ Welded ❒ Flanged
If flanged, specify: ❒ ANSI/ASME ❒ DIN
Size: Class:
Thermowell Bore Diameter (D):
Tip Diameter (A):
Tip Thickness (T):
Length from Tip to Support (U):
Root Diameter (B):
(same as (A) for straight thermowells)
Length of Tip Diameter (Z):
(stepped for thermowells only)

Mounting Style **Stem Style**

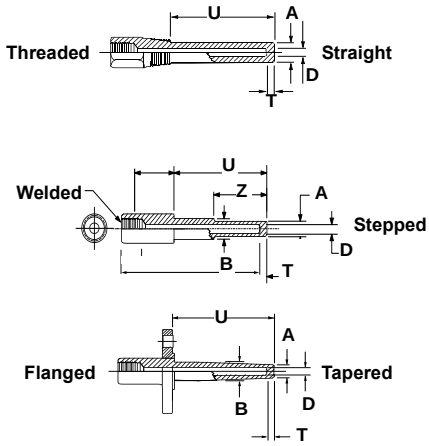

SENSORS_0010B, 0016B, 0047B

Service: ❒ Liquid ❒ Gas ❒ Steam Fluid Description:
Operating Fluid Flow Rate: Maximum
Operating Fluid Flow Rate Units:

❒ gal/s	❒ gal/min	❒ gal/hr	❒ l/s	❒ l/min	❒ l/hr	❒ ft/s	❒ ft^3/min
❒ ft^3/hr	❒ bbl/hr	❒ impgal/s	❒ impgal/min	❒ impgal/hr	❒ m/s	❒ m^3/min	❒ m^3/hr
❒ shton/hr	❒ lb/hr	❒ kg/s	❒ kg/hr	❒ other:			

Operating Max. Fluid Pressure: ❒Gauge ❒Absolute
Pressure Units:
Operating Min. Fluid Pressure: ❒Gauge ❒Absolute
Pressure Units:

Operating Fluid Temperature: ❒°F ❒°C
Viscosity: ❒kg/m•s (Pa•s) ❒Centipoise
Operating Fluid Density: ❒m^3/kg ❒ft^3/lbm
or Specific Volume/Density: ❒at process conditions ❒at standard conditions (STP)

Process Pipe Size:
Process Pipe Size:
Pipe Standoff Height:
Standoff Schedule:
or Standoff Internal Diameter:

For Rosemount Internal Use Only

Rosemount Order/Quotation # Line Item # Ship Set # ID #
Customer Order/Item # Salesperson:
Cont. Admin. Tech. Specialist:

Rosemount Temperature GmbH
Frankenstrasse 21
63791 Karlstein
Germany
Phone: (49) 6188 992 0
Fax: (49) 6188 992 112

Rosemount Inc.
8200 Market Boulevard
Chanhassen, MN 55317
USA
Fax: (1) 952 949 7001
Phone: (1) 800 999 930

Fisher-Rosemount
Singapore Pte Ltd.
1 Pandan Crescent
Singapore
Fax: (65) 777 0947
Phone: (65) 777 8211