Rosemount 585 Annubar Primary Element

Rosemount 585 Annubar Primary Element utilizes a solid sensor construction that offers capabilities for severe service applications.

- Main Steam Line mounting hardware available
- Symmetrical sensor design allows bi-directional flow measurement
- Available in 4 to 96-in. (50 - 2400 mm) line sizes

Additional Information

Specifications: page 148
Dimensional Drawings: page 212
Installation and Flowmeter Orientation: page 181

Ordering information

Table 6. Rosemount 585 Annubar Ordering Information

★ The Standard offering represents the most common options. The starred options (★) should be selected for best delivery. The Expanded offering is subject to additional delivery lead time.

Model	DP Flow primary type	
585	Severe Service Annubar Primary Element	
Application type		
S[(1)(2)]	Severe Service Annubar	★
M[(3)]	Main Steam Line Annubar	
Fluid type		
L	Liquid	★
G	Gas	★
S	Steam	★
Annubar type		
F	Flanged with Opposite Side Support	★
L	Main Steam Annubar with Opposite Side Support	
G	Gear-Drive Flo-Tap	
Line size		
040	4-in. (100 mm)	★
050	5-in. (125 mm)	★
060	6-in. (150 mm)	★
080	8-in. (200 mm)	★
100	10-in. (250 mm)	★
120	12-in. (300 mm)	★
140	14-in. (350 mm)	
160	16-in. (400 mm)	
180	18-in. (450 mm)	
200	20-in. (500 mm)	
240	24-in. (600 mm)	
300	30-in. (750 mm)	
360	36-in. (900 mm)	
420	42-in. (1066 mm)	

Table 6. Rosemount 585 Annubar Ordering Information

★ The Standard offering represents the most common options. The starred options (★) should be selected for best delivery. The Expanded offering is subject to additional delivery lead time.

480	48-in. (1210 mm)	
600	60-in. (1520 mm)	
720	72-in. (1820 mm)	
840	84-in. (2100 mm)	
960	96-in. (2400 mm)	
Mounting assembly material		
C	Carbon Steel (A105)	★
S	316/316L Stainless Steel	★
L	Carbon Steel (A350 LF2)	
G	Chrome-Moly Grade F-11	
N	Chrome-Moly Grade F-22	
J	Chrome-Moly Grade F-91	
0[4]	No Mounting (Customer Supplied)	
Piping orientation		
H	Horizontal Piping	★
D	Vertical Piping with Downwards Flow	★
U	Vertical Piping with Upwards Flow	★
Sensor material		
S	316/316L Stainless Steel	★
H[5]	Alloy C-276	
W[3][5]	Alloy 800H	
K[5]	PVDF	
Sensor size		
11	Sensor size 11	★
22[6]	Sensor size 22	★
44[2][3]	Sensor size 44	
Mounting type		
A	ANSI B16.5 Raised Face Flanges	★
D[7]	DIN Raised Face Flanges	★
R[8]	ANSI B16.5 Ring Type Joint Flanges	
0[3]	Main Steam Packing Gland	
Mounting pressure class		
1	ANSI 150 / DIN PN16	★
3[6]	ANSI 300 / DIN PN40	★
6[6]	ANSI 600 / DIN PN100	★
N[5][6]	ANSI 900	
F[5][6]	ANSI 1500	
T[5][6]	ANSI 2500	
0[3][5][6]	Main Steam Packing Gland	
Opposite side support		
C[9]	NPT Threaded Opposite Support Assembly	★
D[3]	Welded Opposite Support Assembly	★
E	Flanged Opposite Support Assembly	
0[2]	No Opposite Side Support Required	

Table 6. Rosemount 585 Annubar Ordering Information

★ The Standard offering represents the most common options. The starred options (★) should be selected for best delivery. The Expanded offering is subject to additional delivery lead time.

Packing gland/packing		
0[1]	Not Applicable	★
L[2]	SS Packing Gland/Graphite Packing	
T[3]	Main Steam Packing Gland/Graphite Packing	
Insertion mechanism		
0[1][3]	Not Applicable	★
C	Alloy Steel Insertion Rods/Nuts	
S	Stainless Steel Insertion Rods/Nuts	
Isolation valve		
0[1][3]	Not Applicable or Customer Supplied	★
1	Gate Valve, Carbon Steel	
2	Gate Valve, Stainless Steel	
5	Ball Valve, Carbon Steel	
6	Ball Valve, Stainless Steel	
Temperature measurement		
0	No Temperature Sensor Required	★
R[4][6][9]	Remote RTD (1/2-in. NPT Aluminum Housing) with Thermowell	
S[4][6][9]	Remote RTD (1/2-in. NPT Stainless Housing) with Thermowell	
Transmitter connection platform		
3[6][10][11]	Direct-Mount, 3-Valve Manifold	★
4[6][10][11]	Direct-Mount, Dual 3-Valve Manifolds	
6[6][10][12]	High Temperature Direct-Mount 5-Valve Manifold	
7	Remote-Mount 1/2-in. Threaded Connections	
8[3]	Remote-Mount 1/2-in. Welded Connections	
Mounting flange bolting materials		
A	193 Gr B7 Studs w/ A194 Gr 2H Nuts	★
0	No Flange Studs/Nuts Supplied	★
Mounting flange gasket materials		
1	Spiral Wound, 304SS, Flexible-Graphite Filler	★
0	No Flange Gasket Supplied	★
2	Ring-Joint, ANSI B16.20, Hexagonal, 316L	
3	Spiral Wound, B16.20, 316SS, PTFE Filler	

Options (include with selected model number)

Extended product warranty		
WR3	3-year limited warranty	★
WR5	5-year limited warranty	★
Optional mounting for rectangular ducts		
RD	Annubar Mounting for rectangular ducts	
Pressure testing		
P1[13]	Hydrostatic Testing with Certificate	
PX	Extended Hydrostatic Testing	

Table 6. Rosemount 585 Annubar Ordering Information

★ The Standard offering represents the most common options. The starred options (★) should be selected for best delivery. The Expanded offering is subject to additional delivery lead time.

Special cleaning		
PA[6][14]	Cleaning per ASTM G93 Level D (section 11.4)	
Material testing		
V1	Dye Penetrant Weld Exam	
Material examination		
V2	Radiographic Weld Examination	
Flow calibration		
W1	Flow Calibration (Average K)	
Special inspection		
QC1	Visual & Dimensional Inspection w/ Cert.	★
QC7	Inspection & Performance Certificate	★
Material traceability certification		
Q8[15]	Material Traceability Certification per EN 10204:2004 3.1	★
Positive material testing		
V4[15]	Positive Material Identification	
Code conformance		
J2	ANSI/ASME B31.1	
J3	ANSI/ASME B31.3	
Materials conformance		
J5[16]	NACE MR-0175 / ISO 15156	
Country certification		
J6	European Pressure Directive (PED)	★
J1	Canadian Registration Certificate	
Instrument valves for remote mount option		
G2	1/2-in. Needle Valves, SS	★
G6	1/2-in. OS&Y Gate Valve, SS	★
G1	1/2-in. Needle Valves, CS	
G3	1/2-in. Needle Valves, Alloy C-276	
G5	1/2-in. OS&Y Gate Valve, CS	
Instrument valve options		
DV[17]	Double Instrument Valves (4 valves total)	★
Special shipment		
Y1	Mounting Hardware Shipped Separately	★
Assemble mounting hardware		
WP[18]	Assemble Weldolet to Packing body	
Special dimensions		
VM	Variable Mounting	
585 packing gland plug		
TP[18]	Packing Gland Plug for Steam Blow Down	

Table 6. Rosemount 585 Annubar Ordering Information

★ The Standard offering represents the most common options. The starred options (★) should be selected for best delivery.
The Expanded offering is subject to additional delivery lead time.

585 installation alignment bar		
A1[18]	Installation Alignment Bar	
Typical model number: 585 M S L 120 J H W 44 0 0 0 T 0 0 8 0 0		

(1) Required for Annubar Type F.

(2) Required for Annubar Type G.

(3) Required for Annubar Type L.

(4) Not available with Annubar Type L.

(5) Not available with Annubar Type G.

(6) Not available with Sensor Material K.

(7) Mounting Flange Bolting and Gasket Option Code 0 must be selected.

(8) Mounting Flange Gasket Material Option Code 2 or 0 must be selected.

(9) Not available with ANSI 2500 Mounting Pressure Class.

(10) Not available with Mounting Pressure Class N, T, or F.

(11) Not available with Sensor Material W.

(12) Not available with Sensor Material H or W.

(13) Applies to flow element only, mounting not tested.

(14) If selected with Annubar Type F, Mounting Flange Gasket Material Option Code 3 must be selected.

(15) For pressure retaining parts only, isolation and instrument valves are not included.

(16) Materials of Construction comply with metallurgical requirements within NACE MR0175/ISO 15156 for sour oil field production environments. Environmental limits apply to certain materials. Consult latest standard for details. Selected materials also conform to NACE MR0103 for sour refining environments.

(17) Only available if Instrument Valves for Remote Mount Option are selected.

(18) Only available with Annubar Type L.

Specifications

Performance specifications

Performance statement assumptions
Measured pipe I.D.

Discharge coefficient factor
±1.50% of flow rate

Repeatability
±0.10%

Line sizes

- Sensor Size 11: 4-in. to 24-in. (100 to 600 mm)
- Sensor Size 22: 6-in. to 36-in. (150 to 900 mm)
- Sensor Size 44: 10-in. to 96-in. (250 to 2400 mm)

Table 7. Reynolds Number and Probe Width

Sensor size	Minimum rod Reynolds Number (R_d)	Probe width ($_d$) (inches)
11	6500	0.80-in. (20,32 mm)
22	10000	1.20-in. (30,48 mm)
44	25000	2.28-in. (57,91 mm)

Where

$$R_d = \frac{d \times v \times p}{\mu}$$

d = Probe width (feet)

v = Velocity of fluid (ft/sec)

p = Density of fluid (lbm/ft^3)

μ = Viscosity of the fluid (lbm/ft-sec)

Sizing
Contact an Emerson Process Management representative for assistance. A Configuration Data Sheet is required prior to order for application verification. To complete the Configuration Data Sheet go to:
http://www3.emersonprocess.com/Rosemount/DP_Flow/Application/Pages/PCDefault.aspx

Flow turndown
10:1 or better

Functional specifications

Service

- Liquid
- Gas
- Steam

Process temperature limits

Table 8. Direct Mount Transmitter Connection Platform

Transmitter connection platform	Temperature limit
3-valve manifold (Option code 3)	500 °F (260 °C)
5-valve manifold (Option code 6)	750 °F (398 °C)

Note
Specification is 600 °F (315 °C) in steam service.

Table 9. Remote Mount Transmitter Connection Platform

Sensor material	Temperature limit
316 Stainless Steel (Option code S)	850 °F (454 °C)
Alloy C-276 (Option code H)	1250 °F (677 °C)
Alloy 800H (Option code W)	1500 °F (816 °C)
PVDF (Option code K)	250 °F (121 °C)

Pressure and temperature limits

Table 10. Main Steam Line Annubar

Mounting material	Sensor material	Max. pressure @ temp.	Max. temp.
Chrome-Moly Grade F-11	Alloy 800H	2317 psig @ 1000 °F (160 bar @ 538 °C)	1100 °F (593 °C)
Chrome-Moly Grade F-22	Alloy 800H	2868 psig @ 1000 °F (198 bar @ 538 °C)	1100 °F (593 °C)
Chrome-Moly Grade F-91	Alloy 800H	3788 psig @ 1100 °F (261 bar @ 593 °C)	1200 °F (649 °C)

Table 11. Severe Service Annubar

Annubar type	Sensor material	Max. flange rating
Flanged (Option Code F)	316 SST	2500# ANSI
	Alloy C-276	2500# ANSI
	Alloy 800H	2500# ANSI
	PVDF	150# ANSI
Flanged Flo-Tap (Option Code G)	316 SST	600# ANSI

Physical specifications

Temperature measurement

Remote RTD

- Series 78 with Rosemount 644 housing 100 Ohm platinum RTD
- Spring loaded with 1/2-in. NPT nipple and union

Thermowell

- 1/2-in. NPT x 3/4-in. socket weld
- 316 Stainless Steel and Alloy C-276 Material
- 2.5-in. insertion length provided

Annubar sensor material

- 316 Stainless Steel
- Alloy C-276
- Alloy 800H
- PVDF

Mounting material

- Carbon Steel (A105)
- 316 Stainless Steel
- Carbon Steel (A350 LF2)
- Chrome-Moly Grade F-11
- Chrome-Moly Grade F-22
- Chrome-Moly Grade F-91

Annubar type

See "585 dimensional drawings" on page DP Flow-214.

Flanged with opposite side support model (Option F)

- Provided with opposite side support, which is the same material as the pipe and requires a second pipe penetration
- Sensor flange is the same material as the Annubar sensor and the mounting flange is the same material as the pipe material
- Flanged mounting hardware: nuts, studs and gaskets (DIN units supplied without nuts, studs and gaskets)
- SST: –325 to 850 °F (–198 to 454 °C)
- Alloy C-276: –325 to 1250 °F (–198 to 677 °C)
- PVDF: -40 to 250 °F (-40 to 121 °C)
- Alloy 800H: -325 to 1500 °F (-198 to 816 °C)

Main steam annubar with opposite side support (Option L)

- Provided with opposite side support, which is the same material as the pipe and requires a second pipe penetration
- Alloy 800H: -325 to 1500 °F (-198 to 816 °C)
- Only available in sensor size 44

Flanged Flo-Tap models (Option G)

- Opposite side support is not available
- Packing Gland Material Temperature Limits
  - Graphite: –40 to 850 °F (–40 to 454 °C)
- Isolation valve option
  - The isolation valve will carry the same pressure rating as the sensor flange and mounting flange specified in the mounting type
- SST: –325 to 850 °F (–198 to 454 °C)
- Maximum allowable insertion pressure: 1440 psig (99 bar)
- Only available in sensor size 44

Annubar type specification chart

Option code	Mounting type/pressure class	Flanged	Main team	Gear-drive Flo-Tap
A1	150# RF ANSI	X		X
A3	300# RF ANSI	X		X
A6	600# RF ANSI	X		X
AN(1)	900# RF ANSI	X		
AF(1)	1500# RF ANSI	X		
AT(1)	2500# RF ANSI	X		
D1	DIN PN 16	X		X
D3	DIN PN 40	X		X
D6	DIN PN 100	X		X
R1	150# RTJ Flange	X		X
R3	300# RTJ Flange	X		X
R6	600# RTJ Flange	X		X
RN(1)	900# RTJ Flange	X		
RF(1)	1500# RTJ Flange	X		
RT(1)	2500# RTJ Flange	X		
00(1)	Main Steam Packing Gland		X	

(1) Remote mount only.

Instrument connection temperature ranges

Code	Description	Temperature
G1	Needle Valves, Carbon Steel	–20 to 550 °F (–29 to 288 °C)
G2	Needle Valves, Stainless Steel	–20 to 1000 °F (–29 to 538 °C)
G3	Needle Valves, Alloy C-276	–20 to 1000 °F (–29 to 538 °C)
G5	OS&Y Gate Valve, Carbon Steel	–20 to 800 °F (–29 to 427 °C)
G6	OS&Y Gate Valve, Stainless Steel	–20 to 850 °F (–29 to 454 °C)

585 dimensional drawings

Rosemount 585 Flanged w/ Opposite Side Support Annubar Primary

Front view	Side view

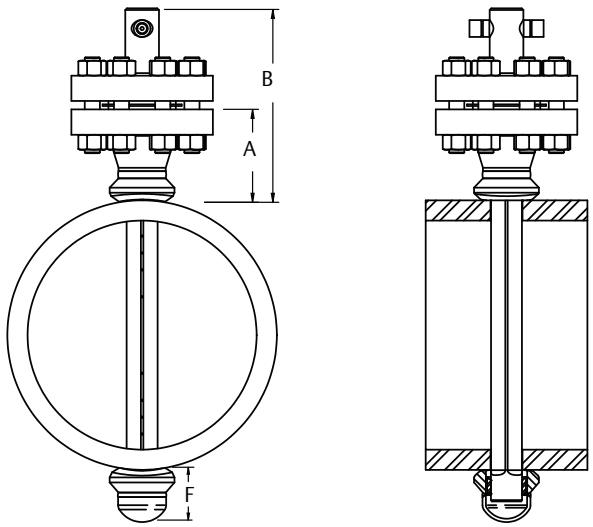

Note: Dimensions are shown with a remote-mount connection. Using direct-mount will add 0.15-in. for sensor size 11 and 22 or 3.15-in. for sensor size 44 to Dimension B.

Table 30. 585 Flanged w/ Opposite Side Support Annubar Dimensional Data

Sensor size	Flange size and rating	A ± 0.125 (3.2)	B ± 0.25 (6.4)	F (Max)
11	1 1/2-in.– 150#	3.88 (98.6)	9.70 (246.4)	3.10 (78.7)
11	1 1/2-in. – 300#	4.13 (104.9)	10.07 (255.8)	3.10 (78.7)
11	1 1/2-in. – 600#	4.44 (112.8)	10.70 (271.8)	3.10 (78.7)
11	DIN40/PN16	3.21 (81.5)	9.05 (229.9)	3.10 (78.7)
11	DIN40/PN40	3.21 (81.5)	9.05 (229.9)	3.10 (78.7)
11	DIN40/ PN100	3.88 (98.6)	10.03 (254.8)	3.10 (78.7)
11	1 1/2-in. – 900#	4.94 (125.5)	11.57 (293.9)	3.60 (91.4)
11	1 1/2-in. – 1500#	4.94 (125.5)	11.57 (293.9)	3.60 (91.4)
11	1 1/2-in. – 2500#	6.75 (171.5)	13.88 (352.6)	3.60 (91.4)
22	2-in. – 150#	4.13 (104.9)	10.01 (254.3)	4.50 (114.3)
22	2-in. – 300#	4.38 (111.3)	10.38 (263.7)	4.50 (114.3)
22	2-in. – 600#	4.75 (120.7)	11.13 (282.7)	4.50 (114.3)
22	DIN50/PN16	3.40 (86.4)	9.24 (234.7)	4.50 (114.3)
22	DIN50/PN40	3.52 (89.4)	9.44 (239.8)	4.50 (114.3)
22	DIN50/ PN100	4.30 (109.2)	10.53 (267.5)	4.50 (114.3)
22	2-in. – 900#	5.88 (149.4)	12.76 (324.1)	4.50 (114.3)
22	2-in. – 1500#	5.88 (149.4)	12.76 (324.1)	4.50 (114.3)
22	3-in. – 2500#	9.88 (250.1)	17.88 (454.2)	4.50 (114.3)
44	3-in. – 150#	4.63 (117.6)	10.69 (271.5)	3.90 (99.1)
44	3-in. – 300#	5.00 (127.0)	11.26 (286.6)	3.90 (99.1)
44	3-in. – 600#	5.38 (136.7)	12.00 (304.8)	3.90 (99.1)
44	DIN80/PN16	3.85 (97.8)	9.77 (248.2)	3.90 (99.1)
44	DIN80/PN40	4.16 (105.7)	10.23 (259.8)	3.90 (99.1)
44	DIN80/ PN100	4.95 (125.7)	11.34 (288.8)	3.90 (99.1)
44	4-in. – 900#	8.19 (208.8)	15.32 (389.1)	6.40 (162.6)
44	4-in. – 1500#	8.56 (217.4)	16.07 (408.2)	6.40 (162.6)
44	4-in. – 2500#	11.19 (284.2)	19.57 (497.1)	6.40 (162.6)

Dimensions are in inches (millimeters).

Rosemount 585 Main Steam Annubar w/ Opposite Side Support Annubar Primary

Front view	Top view

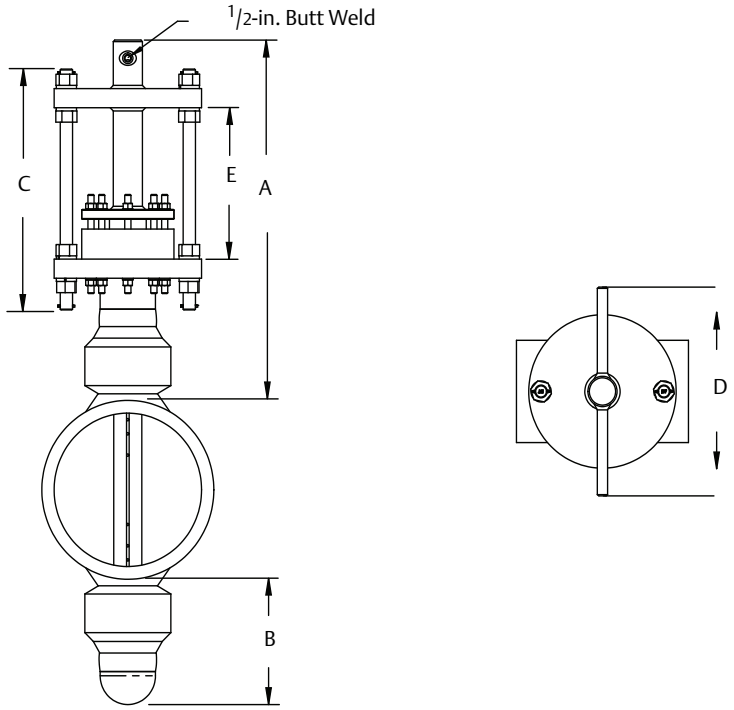

Table 31. 585 Main Steam Annubar w/ Opposite Side Support Annubar Dimensional Data

Sensor size	A (Max)	B	C	D	E
44	29.67 (753.6)	10.0 (254)	19.0 (483)	16.33 (414.0)	11.0 (279)

Dimensions are in inches (millimeters).

Note

Locking rods are always located 90° from the instrument connections. For horizontal installations, the instrument connections will be parallel to the pipe. For vertical installations, the instrument connections will be perpendicular to the pipe.

Rosemount 585 Flanged Flo-Tap Annubar Primary

Front view	Top view

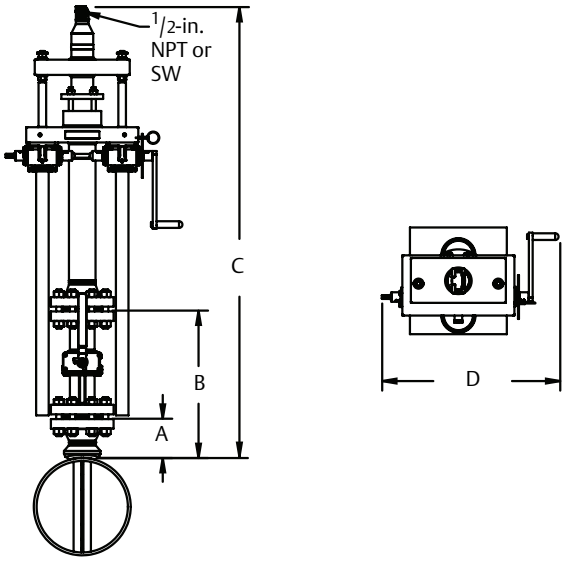

Table 32. 585 Flanged Flo-Tap Annubar Primary Dimensional Data

Sensor size	Flange size and rating	A ± 0.125 (3.2)	B ± 0.25 (6.4)	C[1] (Max) (gear drive)	D (Max)
44	3 – 150#	4.63 (117,6)	12.75 (323,9)	25.58 (649.7)	23.3 (591,8)
44	3 – 300#	5.00 (127,0)	16.25 (412,8)	25.58 (649.7)	23.3 (591,8)
44	3 – 600#	5.38 (136,7)	19.50 (495,4)	25.58 (649.7)	23.3 (591,8)

Use the appropriate formula to determine C value:
Inserted formula: Pipe I.D. + Wall Thickness + Value B + C^1 (use the Gear drive values for C^1)
Retracted formula: [2 x (Pipe I.D. + Wall Thickness + Value B)] + C^1 (use the Gear drive values for C^1)
Dimensions are in inches (millimeters).