Subject to change without notice

VALVE AUTOMATION SYSTEMS

EL-O-MATIC

WWW.EL-O-MATIC.COM

EL-O-MATIC ACTUATOR WITH HD SWITCH BOX IP67

HD

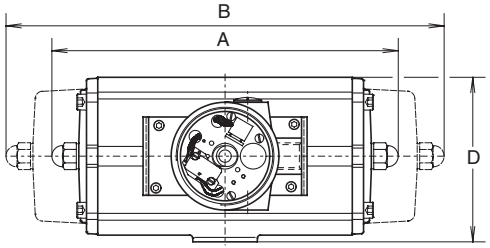

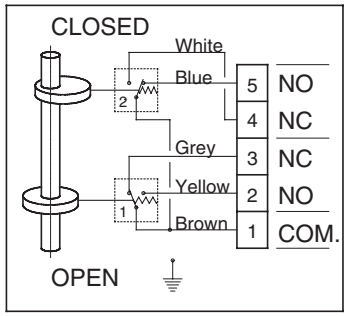

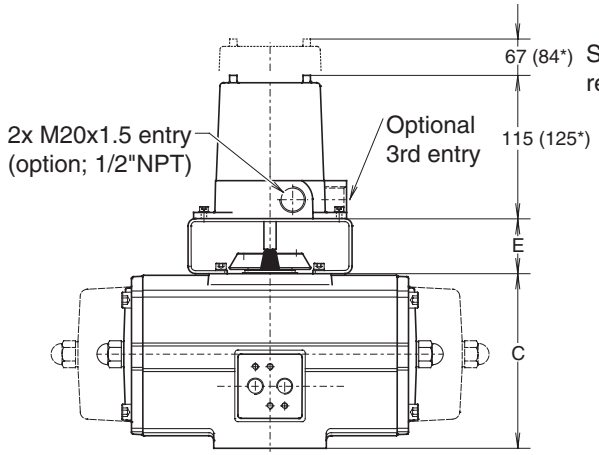

* Marked dimensions are for tall cover versions i.e. 6 switches

Maximum currents:

Voltage	Load			
	Non-inductive		Inductive	
	Resistive	Lamp	Inductive	Motor
250 VAC	10 A	1.5 A	6 A	2 A
8 VDC	10 A	3 A	6 A	3 A
30 VDC	6 A	3 A	6 A	3 A
125 VDC	0.6 A	0.1 A	0.6 A	0.1 A
250 VDC	0.3 A	0.05 A	0.3 A	0.05 A

Dim. in mm.	Actuator type											
	E12	E25	E40	E65	E100	E200	E 350	E600	E950	E1600	P2500	P4000
A PD/ED	103	159	180	199	221	283	305	387	424	516	378	502
B PE/ES	118	172	204	249	267	360	387	477	517	637	570	834
C	80	100	113	125	138	163	201	250	289	327	386	410
D	60	83	96	107	117	137	182	217	242	275	358	390
E	45	45	45	45	45	45	45	55	55	55	55	55

Description:

This heavy duty switch box encloses two single pole double throw switches for indicating the fully open and fully closed actuator positions.

The switches are operated by two cams on an extension of the actuator drive shaft and all mechanical parts are contained within the enclosure. Both switches are independently adjustable throughout the operating stroke, but are normally set to indicate at about 5° before each end position.

The enclosure is waterproof to IP67 (submersible) and as such completely dust tight.

All five terminals of the two switches are prewired to a terminal block , which is easily accessible when the top cover is removed.

Two electrical entries are included (third entry optional), one of which is fitted with a blanking plug. This, with the addition of an extra pair of terminals, enables the switchbox to be used as a junction box for the solenoid wiring and provides the actuator with a single electrical entry.

The switch box is mounted on top of the actuator with an accessory bracket according VDI/VDE 3845 (NAMUR), which incorporates a visual position indicator.

Specification:

Switches

Type : V3, mechanincal
Contacts : Normally open and normally closed

Housing

Material : Aluminium alloy, AlSi7Mg
Enclosure : IP 67 (IEC 529)
Temperature : - 20°C to + 80°C
Cable entries : 2 x M20x1.5
- option : 2 x 1/2"NPT
: Third entry
Finish : Epoxy coating
Mounting : Acc. VDI/VDE 3845 (NAMUR)

Indentifcation:

HD

Nr.: 3.201.002

Date: Jan '06

All rights reserved