ELQ ACTUATOR WITH STATUS MODULE

Q-STM

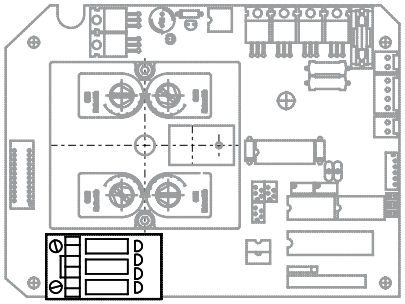

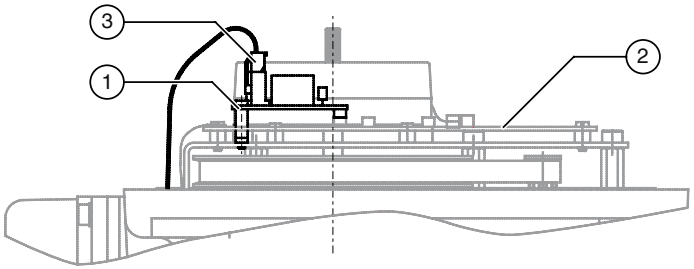

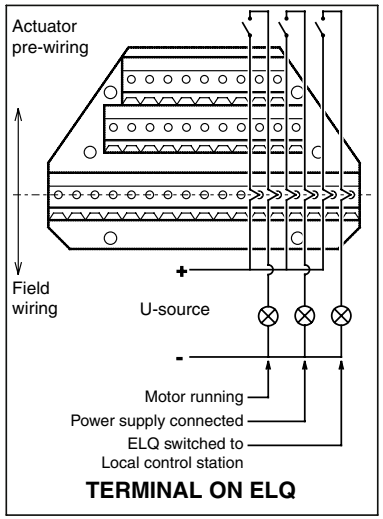

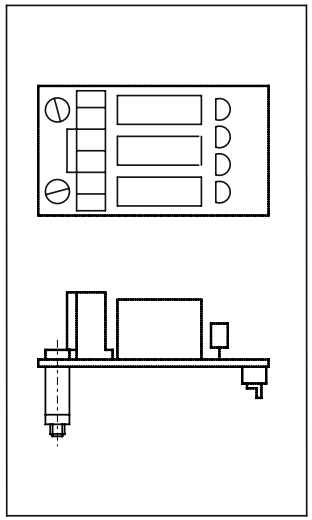

Description

This ELQ electric actuator option provides status information from the ELQ-actuator. Signals are provided for motor running, whether the ELQ-actuator is switched to the Local control box and if the power supply is properly connected. These signals or a combination of these signals can tell what is happening with the ELQ-actuator/valve unit.

Construction

The option consists of an electronic card (1) with three potential free contacts providing the signals and is mounted on top of the mainboard (2). The ELQ-actuator has an intermediate 6 pole connector (3) to connect the status module to the terminals in the terminal compartment.

Specification

Relays	: Potential free contacts
Voltage	: 0-30V DC/AC
Current	: 2 A max.

Signal	**Status**
Motor running	Contact closed
Switched to Local control	Contact closed
Power present	Contact closed

Identification

Factory Option	: Add “+ Q-STM” to the basic actuator size
	: eg. ELQ100 + Q-STM
Kit Option	: Actuator size is added to: “Kit, Q-STM”
	: eg. Kit, Q-STM/ELQ100

Copyright © Emerson Process Management. The information in this document is subject to change without notice.
Updated data sheets can be obtained from our website **www.El-O-Matic.com** or from your nearest Valve Automation Center ***USA**: +1 813 319 0266 **Europe**: +31 74 256 10 10 **Asia-Pacific:** +65 6501 4600*

EMERSON™
Process Management