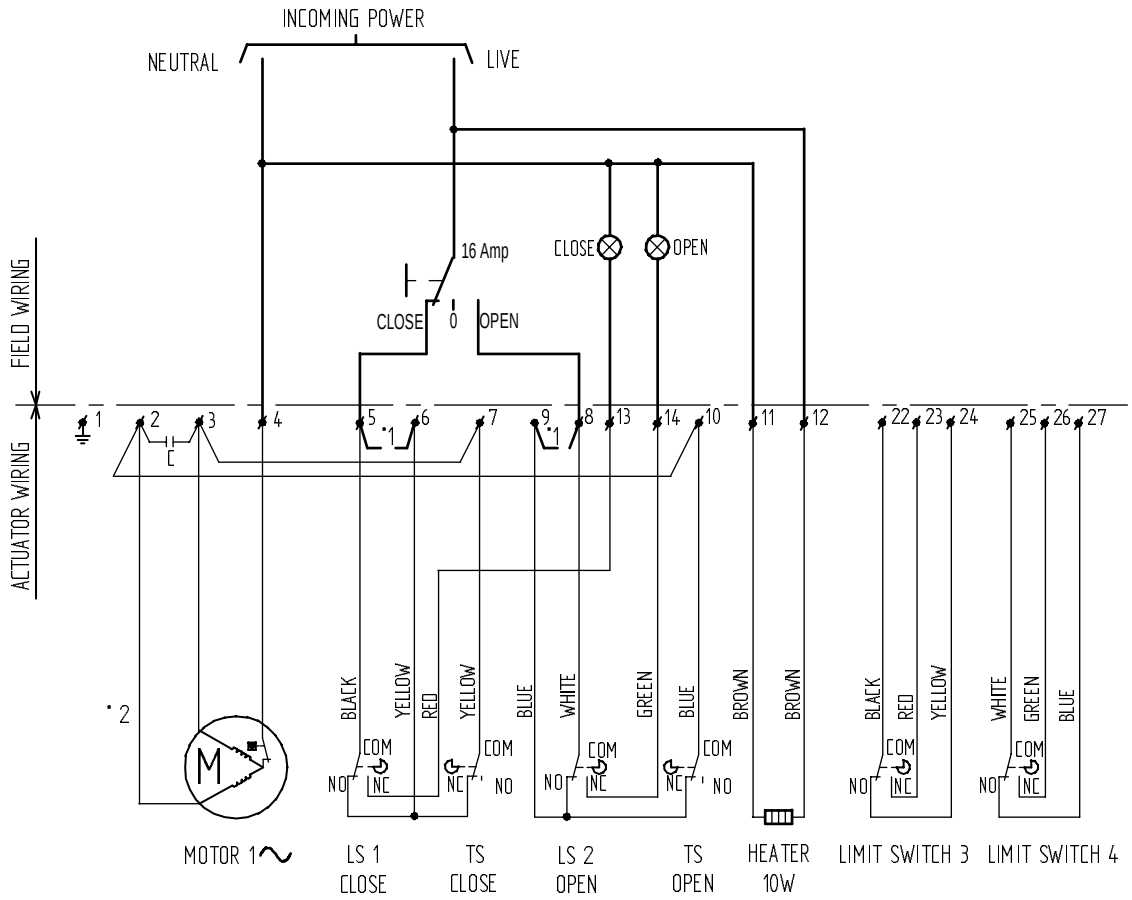

IMPORTANT
Each actuator must be powered through its own individual switch or relay contacts to avoid cross feed between two ore more actuators

LIMIT SWITCHES SHOWN IN MID STROKE

*1 LINK FOR TORQUE SEATED VALVE
*2 MOTOR WIRING

EL 100/150	EL 200/1600
2 = BLUE	2 = BLACK
3 = BLACK	3 = BLUE
4 = BROWN	4 = BROWN

EL-O-MATIC INTERNATIONAL
LOCATION HENGELO (O) THE NETHERLANDS

Format : A3	Drn : AB	Scale : -	Date : 05/10/2000
Title : Wiring diagram basic motor 1PH, EL100-EL1600 WP/XP (EL1200-1600=220V)		ENOC nr. : H-0747 / Date : 18/01/2001	Par. : RS
		State : Released	
Material : -			
Treatment : -		Drwnr. : 990.40.027 page 1 of 2	Rev. : A

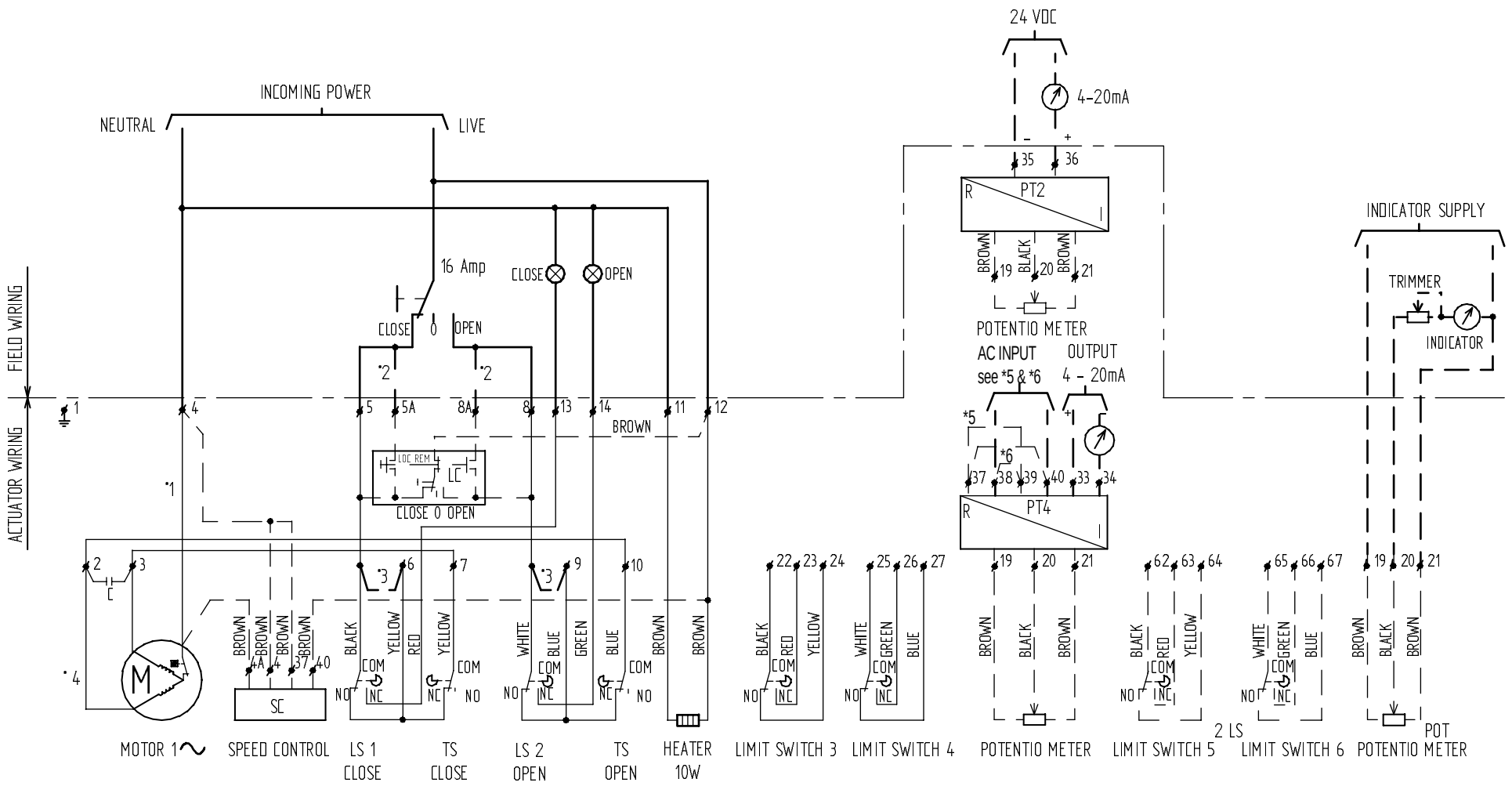

*1 NO WIRE BY SPEED CONTROL SC
*2 CLOSE TO 5A OPEN TO 8A BY LOCAL CONTROL LC
*3 LINK FOR TORQUE SEATED VALVE
*4 MOTOR WIRING

EL 100/150	EL 200/1600
2 = BLUE	2 = BLACK
3 = BLACK	3 = BLUE
4 = BROWN	4 = BROWN

*5 LINK PT4 FOR 220V NR 37 & 39
*6 LINK PT4 FOR 110V NR 37 & 40/ 38 & 39

LOCAL CONTROL EX
IN EXPLOSION PROOF EXECUTION BOTH LOCAL/REMOTE AND CLOSE/STOP/OPEN SWITCHES ARE COMBINED INTO ONE SWITCH

LIMIT SWITCHES SHOWN IN MID STROKE

KIT OPTIONS, LC_POT_2LS_PT2_PT4_SC, ONLY ON ORDER
KIT OPTIONS SHOWN IN DOTTED LINES

IMPORTANT
Each actuator must be powered through its own individual switch or relay contacts to avoid cross feed between two ore more actuators

EL-O-MATIC INTERNATIONAL LOCATION HENGELO (O) THE NETHERLANDS	Format: A3	Drn.: AB	Scale: -	Date: 05/10/2000
Material: -	Title: Wiring diagram options motor 1PH, EL100-EL1600 WP/XP (EL1200-1600=220V)		ENOC nr.: H-0747 / Date: 18/01/2001	Par.: RS
			State: Released	
Treatment: -		Drwnr.: 990.40.027 page 2 of 2		Rev.: A