Model A-324 DM

Model R-324-6P

Model A-424

Model A-324

Model ES-10

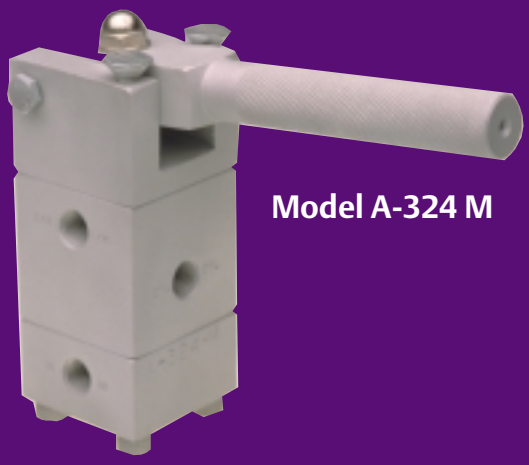

Model A-324 M

BETTIS™

Switching Relays

EMERSON™
Process Management

EMERSON. CONSIDER IT SOLVED.™

Description

Bettis Switching Relays are pneumatic/hydraulic poppet style switching devices — manual or pilot operated — for use with high or low pressure control applications. In pneumatic service, they can operate with high pressure gas to 1500 psig, or to 150 psig in low pressure service. The switching relays are also available as hydraulic models, operating to a maximum of 2160 psig. The Bettis relays are available as 3-way and 4-way 2-position bodies with a range of switching options including pneumatic or hydraulic pilot, mechanical and manual lever.

Features

- Rugged construction for reliability in tough service.
- Tapered poppets. Replaces need for sliding spools with O-rings.
- Large diaphragm and heavy duty return springs.
- Medium flow capacity (Cv). Boosters and quick exhausts normally not required.
- Models available for manual or automated operation.
- Applicable to many low flow switching and shutoff applications.
- Designed for trouble-free operation in cold temperatures and with wet or dirty supply gas or air.
- Bubble tight sealing.
- Customized options available.

General Specifications

All Models

Weights

- A324 2.5 lbs (1.1 kg)
- A424 3.75 lbs (1.71 kg)
- R324 2.5 lbs (1.1 kg)
- A324-PL 3.7lbs (1.7 kg)
- A324-DM 3.7lbs (1.7 kg)
- ES-10 2.0 lbs (0.9 kg)

Ports

- 1/4 NPT, standard

Service

- Air, Sweet gas, <5% H2S, hydraulic fluid

Models A324, A424, R324, A324-DM

Maximum Working Pressure (MAWP)

- Body 1500 psig (10,335 kPag)
- Signal 150 psig (1,033 kPag)

Model A324-PL

Maximum Working Pressure (MAWP)

- Body 2160 psig (14,882 kPag)
- Signal 1500 psig (10,335 kPag)

Model ES-10

Maximum Working Pressure (MAWP)

- Body 2160 psig (14,882 kPag)

Model A-324

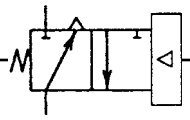

3-Way, 2-Position

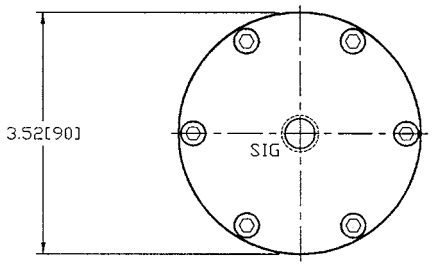

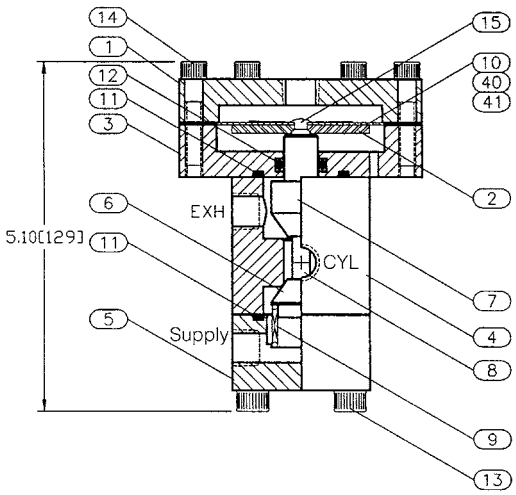

Item	Part No.	Description	Material	Qty.
1	324-001	Diaphragm Cap	AL 6061-T6	1
2 *	324-002	Diaphragm Plate	A366/C1018	1
3	324-003	Cylinder Plate	AL 6061-T6	1
4	324-004	Upper Body	AL 6061-T6	1
5	324-005	Lower Body	AL 6061-T6	1
6 *	324-006	Poppet, lower	PVC	1
7 *	324-007	Poppet, upper	PVC	1
8	324-008	Poppet Spacer	SS 304	1
9	324-009	Spring	SS 302	1
10 *	324-010	Diaphragm	Fairprene	1
11 *	324-011	O-Ring, Body	Nitrile A70	2
12 *	324-012	O-Ring, Poppet	Nitrile A70	1
13	324-013	Capscrew, Body	SS 304	4
14	324-014	Capscrew, Diaphragm	SS 304	6
15 *	324-015	Rivet, Diaphragm	AL 6061-T6	1
40 *	324-040	Diaphragm Protector	Teflon	1
41 *	324-041	Diaphragm Backup	SS 302	1

* Recommended spare parts.

Specifications

Temperature Rating: –58°F thru +248°F [–50°C thru +120°C]
Mass: 2.5 lbs [1.1 kg]
MAWP Body: 1500 psig [10335 kPag]
Signal: 150 psig [1033 kPag]
Nominal Ratio: 12:1

Flow Capacity	(Cv)
Supply → CYL.	2.0
CYL. → EXH.	1.6

Dimensions

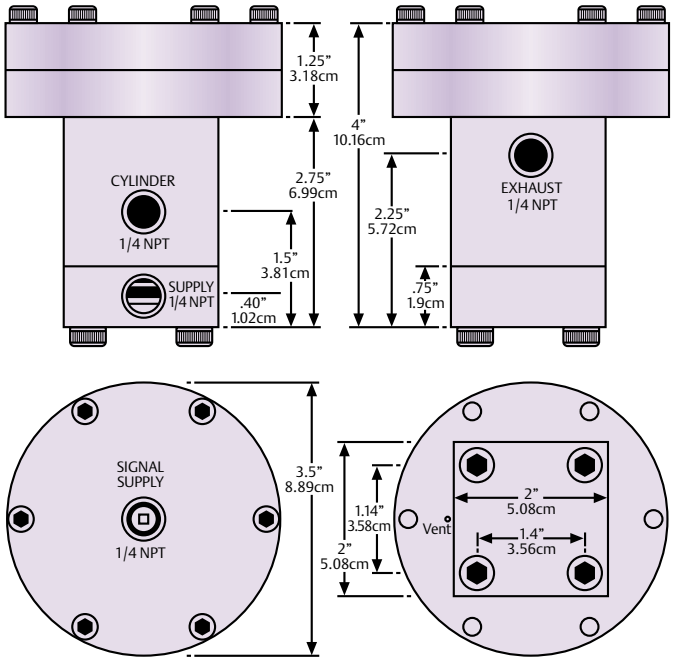

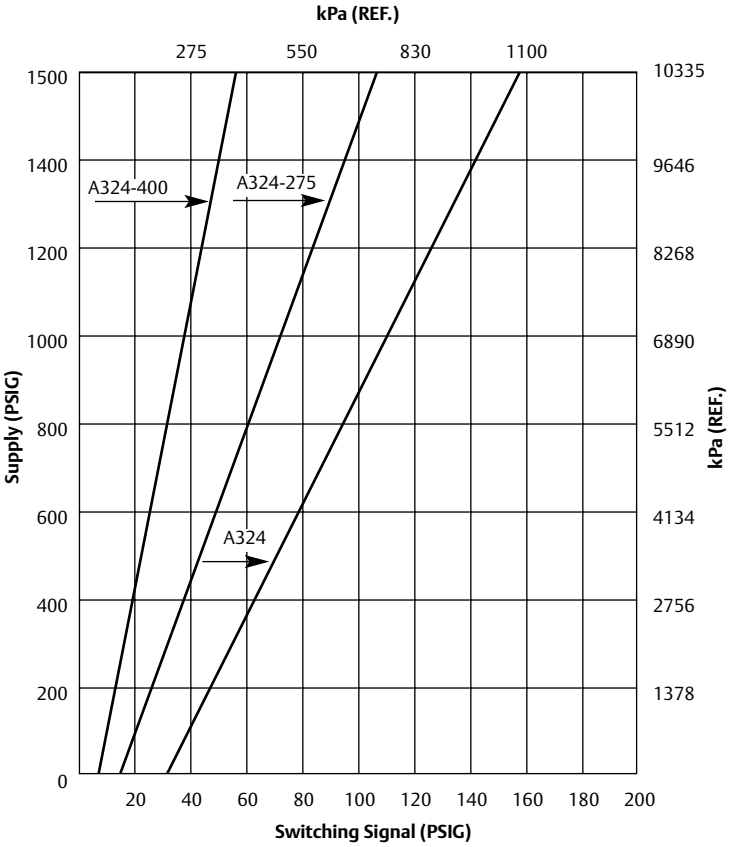

Model A-424

4-way, 2-position

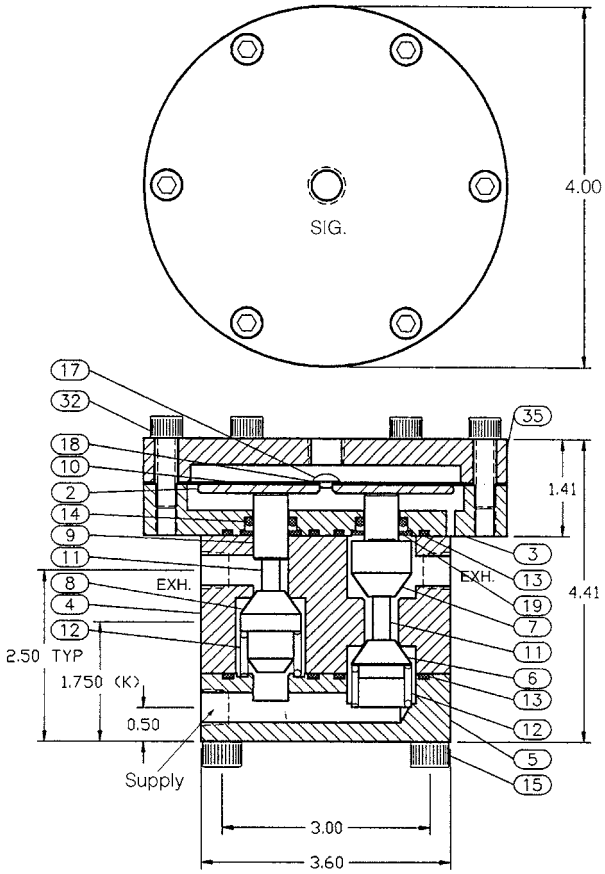

Item	Part No.	Description	Material	Qty.
2 *		Diaphragm Plate	C1018 ZN.PL	1
3		Diaphragm Cyl. Plate	AL 6061-T6	1
4		Upper Body	AL 6061-T6	1
5		Lower Body	AL 6061-T6	1
6 *		Poppet 1	PVC/Nyl./Torlon	1
7 *		Poppet 2	PVC/Nyl./Torlon	1
8 *		Poppet 3	PVC/Nyl./Torlon	1
9 *		Poppet 4	PVC/Nyl./Torlon	1
10 *		Diaphragm	Nyl. Rein Nitrile	1
11		Poppet Spacer	SS 303/../316	2
12		Spring	SS	2
13 *		O-Ring, Body	Nitrile	4
14 *		O-Ring, Poppet	Nitrile	2
15		Capscrew, Body	HXSC GR 5 ZN.PL	4
17 *		Rivet, Diaphragm	Al – Truss Head	1
18 *		Washer, Diaphragm	SS 302	1
19 *		Snap Ring	Truarc SS	2
32		Capscrew, Diaphragm	HXSC SS 304	6
35		Diaphragm Cap	AL 6061-T6	1
44		Nameplate	SS 304	1

* Recommended spare parts.
(K) 2 hidden cylinder ports on bore axes at elevation shown.

Specifications

Temperature Rating:		–58°F thru +248°F (–50°C thru +120°C)
Mass:		3.75 lbs [1.71 kg]
MAWP	Body:	1500 psig [10335 kPag]
	Signal:	150 psig [1033 kPag]

Flow Capacity	(Cv)
Supply → CYL. 2 (NC)	2.0
Supply → CYL. 1 (NO)	1.6
CYL. 2 (NC) → EXH.	1.3
CYL. 1 (NO) → EXH.	1.3

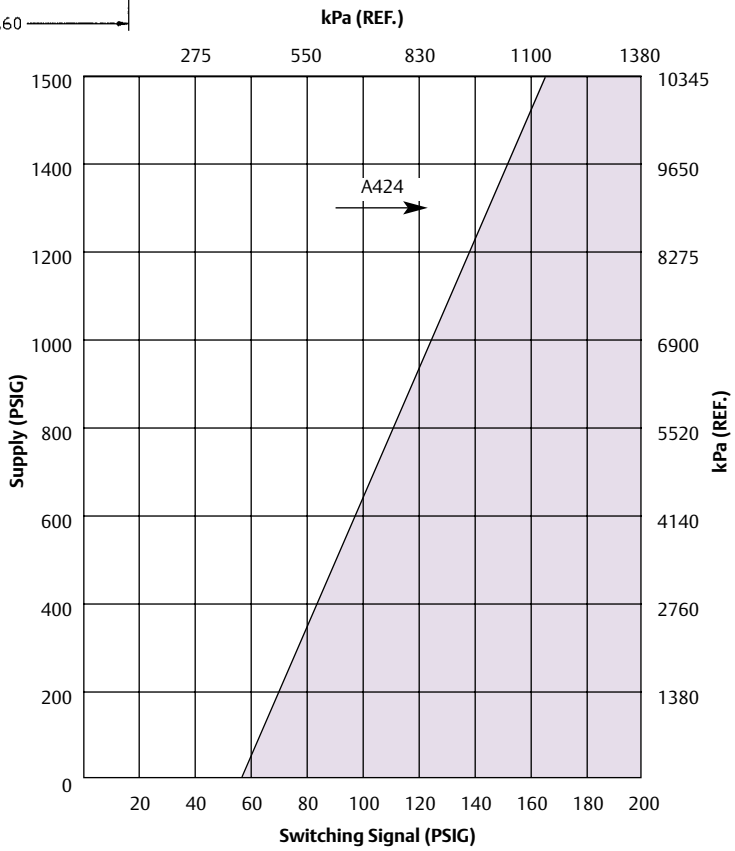

Model A324-M

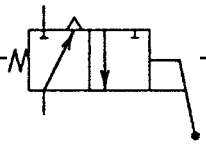

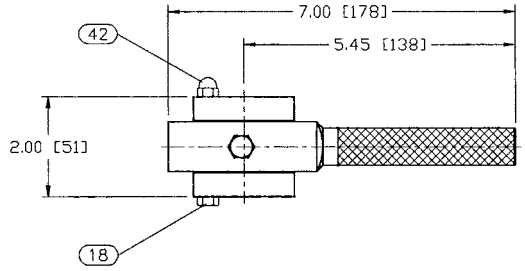

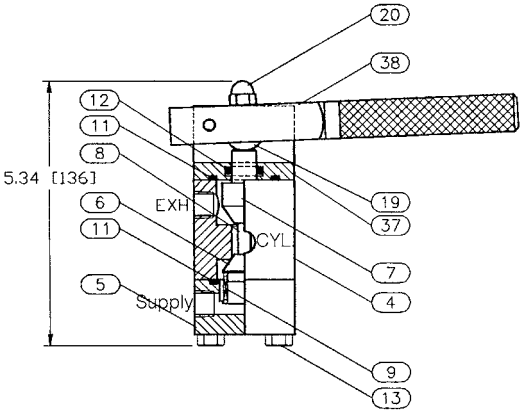

Item	Part No.	Description	Material	Qty.
4	324-004	Upper Body	AL 6061-T6	1
5	324-005	Lower Body	AL 6061-T6	1
6*	324-006	Poppet, Lower	PVC	1
7*	324-007	Poppet, Upper	PVC	1
8	324-008	Poppet Spacer	Dowel Pin	1
9	324-009	Spring	SS	1
11*	324-011	O-Ring, Body	Buna N	2
12*	324-012	O-Ring, Poppet	Buna N	1
13	324-013	Capscrew, Body	HXHC GR. 5 ZN.PL	4
18	324-018	Capscrew, Operator	HXHC GR. 5 ZN.PL	1
19	324-019	Roundhead Push Bolt	RHSN GR 5 ZN.PL	1
20	324-020	Nut, Lever	GR 5 ZN.PL	1
37	324-037	"M" Cylinder Plate	AL 6061-T6	1
38	324-038	"M" Lever	AL 6061-T6	1
42	324-042	Nut, Operator	GR 5 ZN.PL	1
– –	700-106	Nameplate, Special Trim	SS 304	1

* Recommended spare parts.

Specifications

Temperature Rating: –58°F thru +248°F [–50°C thru +120°C]
Mass: 2.2 lbs [1.0 kg]
MAWP: 1500 psig [10335 kPag]
Flow Capacity (Cv): Same as A-324

Model A324-DM

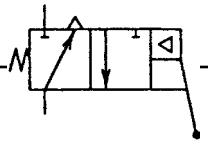

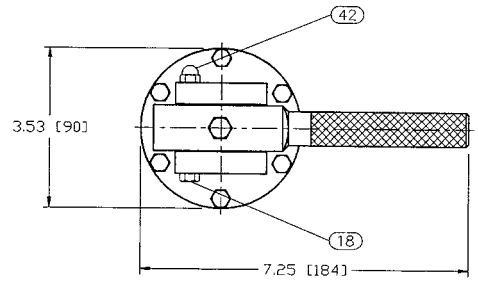

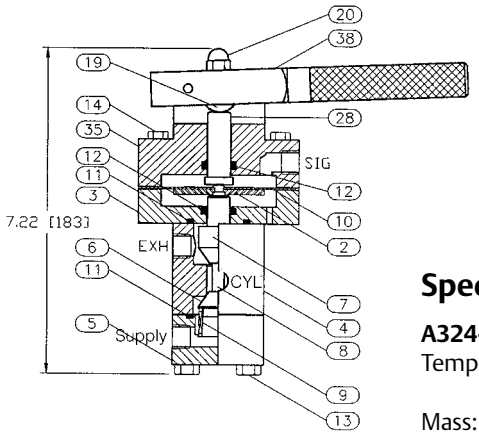

Item	Part No.	Description	Material	Qty.
2	324-002	Diaphragm Plate	AL 6061-T6	1
3	324-003	Cylinder Plate	AL 6061-T6	1
4	324-004	Upper Body	AL 6061-T6	1
5	324-005	Lower Body	AL 6061-T6	1
6	324-006	Poppet, Lower	PVC	1
7	324-007	Poppet, Upper	PVC	1
8	324-008	Poppet Spacer	SS 304	1
9	324-009	Spring	SS 302	1
10	324-010	Diaphragm	Fairprene/TFE	1
11	324-011	O-Ring, Body	Nitrile	2
12	324-012	O-Ring, Poppet	Nitrile	2
13	324-013	Capscrew, Body	SS 304	4
14	324-032	Capscrew, Cap	SS 304	6
18	324-018	Capscrew, Operator	SS 304	1
19	324-019	Roundhead Push Bolt	RHSN GR 5 ZN PL	1
20	324-020	Nut, Lever	GR 5 ZN PL	1
28	324-028	Plunger	PVC	1
35	324-035	Diaphragm Cap	AL 6061-T6	1
38	324-038	"M" Lever	AL 6061-T6	1
42	324-042	Nut, Operator	SS 304	1

Specifications

A324-DM

Temperature Rating: –58°F thru +248°F [–50°C thru +120°C]
Mass: 3.7 lbs [1.7 kg]
MAWP: Body: 1500 psig [10335 kPag]
Signal: 150 psig [1033 kPag]
Nominal Ratio: 12:1
Flow Capacity (Cv): Same as A-324

A324-DM-400

Temperature Rating: –50°F thru +150°F [–45°C thru +65°C]
Mass: 6.5 lbs [2.9 kg]
MAWP: Body 3,000 psig [20,600 kPag]
Signal: 150 psig [1033 kPag]
Nominal Ratio: 20:1

Model R-324

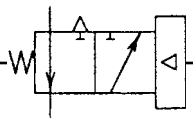

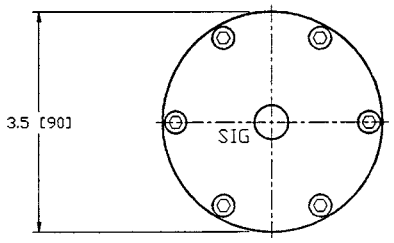

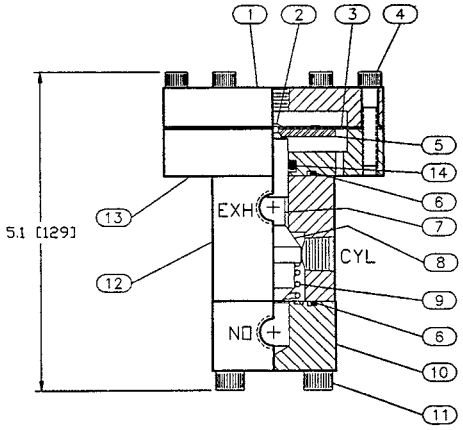

Item	Part No.	Description	Material	Qty.
1	324-001	Diaphragm apC	AL 6061-T6	1
2	324-015	Rivet – Diaphragm	Aluminum	1
3a	324-010	Diaphragm	Fairprene	1
3b	324-040	Diaphragm Protector	Teflon	1
3c	324-041	Diaphragm Backup	SS 302	1
4	324-014	Capscrew, Diaphragm	GR 8 PL	6
5	324-002	Diaphragm Plate	Steel	1
6	324-011	O-Ring – Body	Buna-N	2
7	324-043	Plunger	SS 316	1
8	424-009	Poppet	PVC	1
9	324-009	Spring	SS 302	1
10	324-044	Lower Body	AL 6061-T6	1
11	324-013	Capscrew – Body	GR 8 PL	4
12	906-002	Center Body	AL 6061-T6	1
13	324-003	Diaphragm Cylider Pl.	AL 6061-T6	1
14	324-012	O-Ring – Plunger	Buna-N	1

Specifications

Temperature Rating: –58°F thru +248°F [–50°C thru +120°C]
Mass: 2.5 lbs [1.1 kg]
MAWP: Body 1500 psig [10335 kPag]
Signal 150 psig [1033 kPag]

Flow Capacity	(Cv)
NO → CYL.	1.6
CYL. → EXH.	1.3

Model A-324-PL

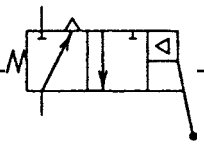

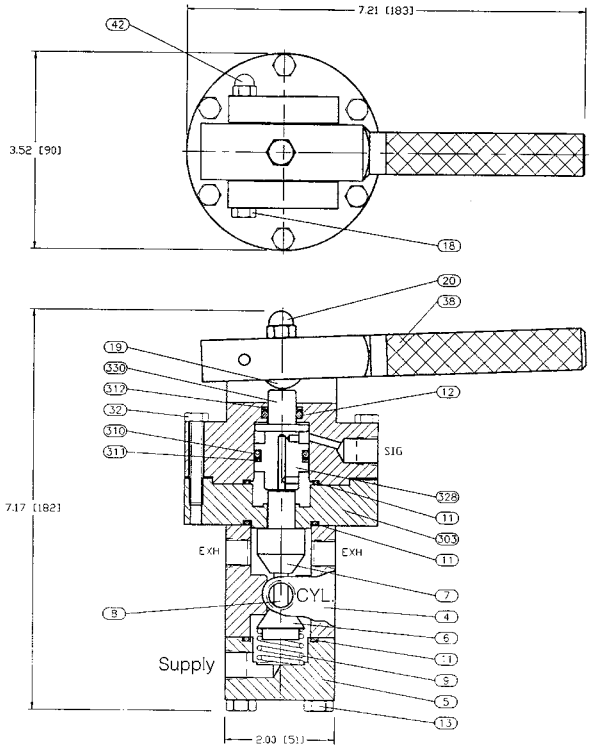

Item	Part No.	Description	Material	Qty.
4	324-004	Upper Body	AL 6061-T6	1
5	324-005	Lower Body	AL 6061-T6	1
6	324-006	Poppet, Lower	PVC	1
7	324-007	Poppet, Upper	PVC	1
8	324-008	Poppet Spacer	Dowel Pin	1
9	324-009	Spring	CR. Van	1
11	324-011	O-Ring, Body	Nitrile	2
12	324-012	O-Ring, Poppet	Nitrile	2
13	324-013	Capscrew, Body	HXHC GR. 5 ZN.PL	4
18	324-018	Capscrew, Lever	HXHC GR. 5 ZN.PL	1
19	324-019	Roundhead Push Bolt	RHSN GR 5 ZN.PL	1
20	324-020	Nut, Push Bolt	GR 5 ZN.PL	1
32	324-032	Capscrew, Head	HXHC GR. 5 ZN.PL	1
38	324-038	Lever	AL 6061-T6	1
42	324-042	Nut, Lever	RHSN GR 5 ZN.PL	1
301	324-301	Cylinder Head	AL 6061-T6	1
303	324-303	Cylinder Plate	AL 6061-T6	1
310	324-310	O-Ring, Piston	Nitrile	1
311	324-311	Backup, Piston	Nitrile	1
312	324-312	Backup, Poppet	Nitrile	1
328	324-328	Piston	AL 7075-T651	1
330	324-330	Plunger	AL 7075-T651	1

Specifications

Temperature Rating: –58°F thru +248°F [–50°C thru +120°C]
Mass: 3.7 lbs [1.7 kg]
MAWP: Body 2160 psig [14882 kPag]
Signal 1500 psig [10335 kPag]
Flow Capacity (Cv): Same as A-324

Model ES-10

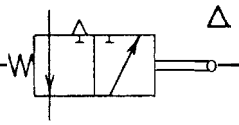

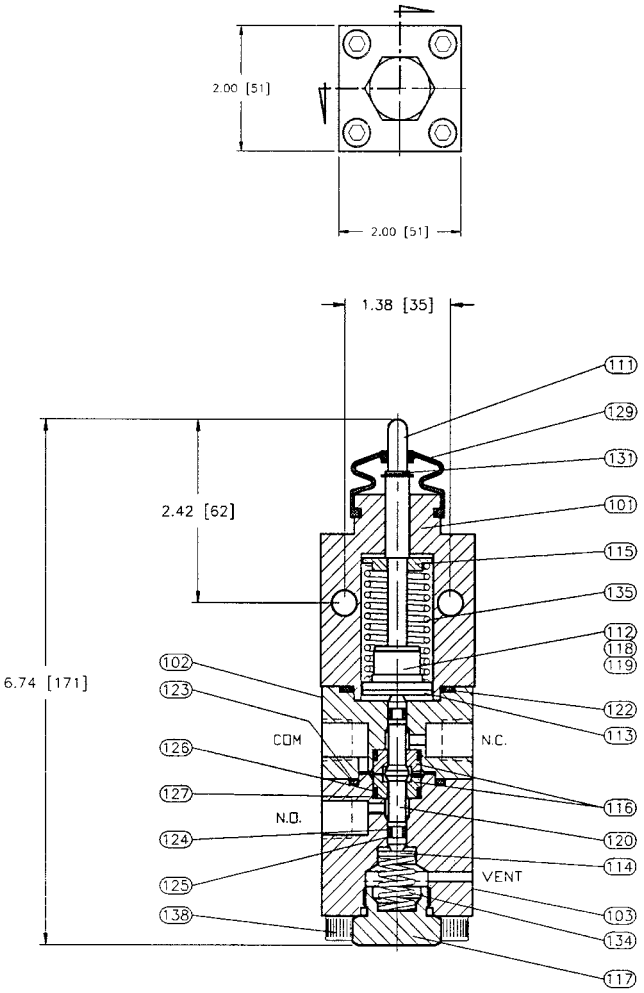

Item	Part No.	Description	Material	Qty.
101	906-101	Adapter Body	AL 6061-T6	1
102	906-102	Upper Body	AL 6061-T6	1
103	906-103	Lower Body	AL 6061-T6	1
111	906-111	Plunger	SS 316	1
112	906-112	Spring Barrel	AL 7075-T651	1
113	906-113	Disc	AL 7075-T651	1
114	906-114	Spring Seat, Return	AL 7075-T651	1
115	906-115	Spring Seat, Overtravel	AL 7075-T651	1
116	906-116	Seat Insert	PVC	2
117	906-117	Spring Retainer Plug	AL 7075-T651	1
118	906-118	Screw, Plunger	SS	1
119	906-119	Washer	SS 316	1
120	906-120	Poppet	AL 7075-T651	1
122	906-122	O-Ring, Upper Body	Nitrile	1
123	906-123	O-Ring, Lower Body	Nitrile	1
124	906-124	O-Ring, Poppet	Nitrile	2
125	906-125	Backup, Poppet	Nitrile	2
126	906-126	O-Ring, Seat Insert	Nitrile	2
127	906-127	Backup, Seat Insert	Nitrile	2
129	906-129	Boot	Nitrile	1
131	906-131	Retaining Ring	SS 316	1
134	906-134	Spring, Return	SS	1
135	906-135	Spring, Overtravel	SS	1
138	906-138	Bolt	SS 304	4

Specifications

Temperature Rating: –58°F thru +248°F [–50°C thru +120°C]
Mass: 2.0 lbs [0.9 kg]
MAWP: 2160 psig all ports [14882 kPag]
Flow Capacity (Cv): 0.080

Model R-324 6P100

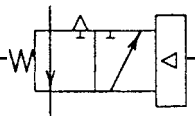

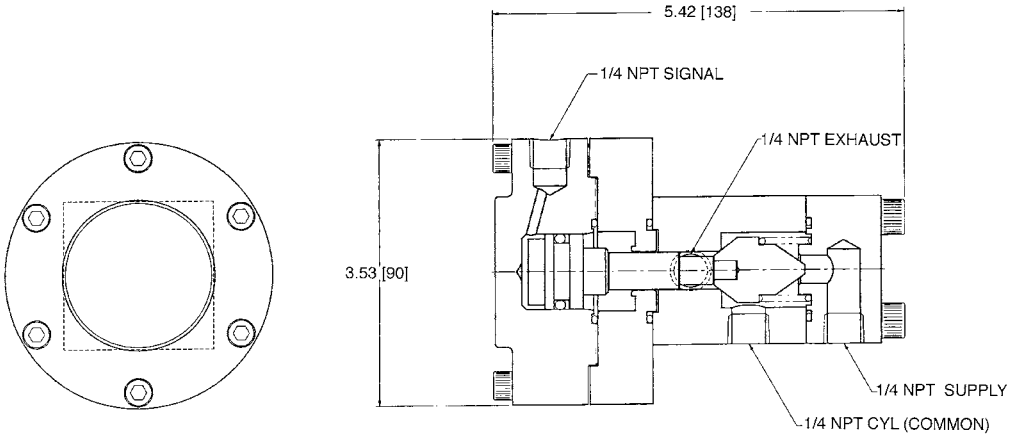

Specifications

Temperature Rating: –58°F thru +150°F (–50°C thru +65°C)
Mass: 3.2 lbs [1.5 kg]
MAWP: Body 1500 psig [10335 Kpag]
Signal 1500 psig [10335 Kpag]

Flow Capacity	(Cv)
Supply → CYL.	1.5
CYL. → EXH.	1.3

Accredited by
the Dutch Council
for certification

ISO 9001

Quality Certification Bureau Inc.

Cert. Num. 93-13

Bettis Canada Ltd.
Edmonton, Alberta

World Area Configuration Centers (WACC) offer sales support, service, inventory and commissioning to our global customers. Choose the WACC or sales office nearest you:

NORTH & SOUTH AMERICA

19200 Northwest Freeway
Houston TX 77065
USA
T +1 281 477 4100
F +1 281 477 2809

Av. Hollingsworth
325 Iporanga Sorocaba
SP 18087-105
Brazil
T +55 15 3238 3788
F +55 15 3228 3300

ASIA PACIFIC

No. 9 Gul Road
#01-02 Singapore 629361
T +65 6501 4600
F +65 6268 0028

No. 1 Lai Yuan Road
Wuqing Development Area
Tianjin 301700
P. R. China
T +86 22 8212 3300
F +86 22 8212 3308

MIDDLE EAST & AFRICA

P. O. Box 17033
Dubai
United Arab Emirates
T +971 4 811 8100
F +971 4 886 5465

P. O. Box 10305
Jubail 31961
Saudi Arabia
T +966 3 340 8650
F +966 3 340 8790

24 Angus Crescent
Longmeadow Business Estate East
P.O. Box 6908 Greenstone
1616 Modderfontein Extension 5
South Africa
T +27 11 451 3700
F +27 11 451 3800

EUROPE

Berenyi u. 72- 100
Videoton Industry Park
Building #230
Székesfehérvár 8000
Hungary
T +36 22 53 09 50
F +36 22 54 37 00

For complete list of sales and manufacturing sites, please visit
www.emersonprocess.com/valveautomationlocations
Or contact us at info.valveautomation@emerson.com

©2016 Emerson Process Management. All rights reserved.

The Emerson logo is a trademark and service mark of Emerson Electric Co. Bettis™ is a mark of one of the Emerson Process Management family of companies. All other marks are property of their respective owners.

BETTIS™

EMERSON™
Process Management