# DIMENSION SHEET ACTUATOR ISO E12 (90°/180°)

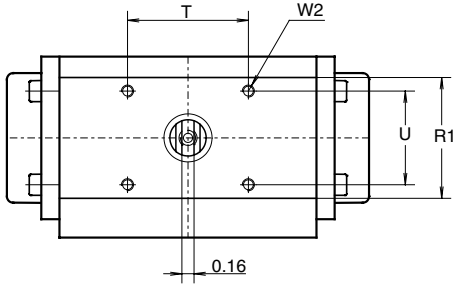


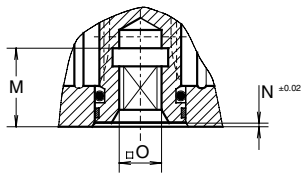


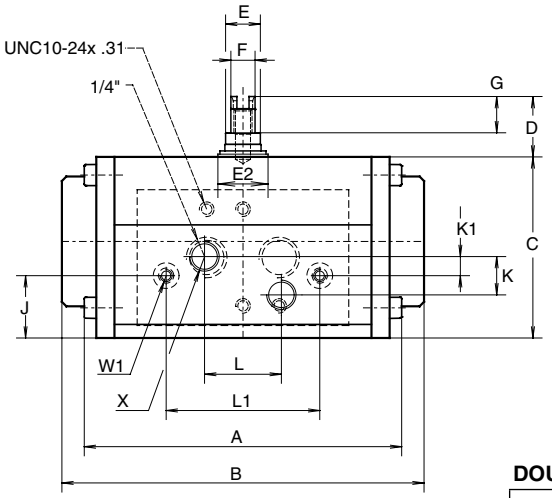


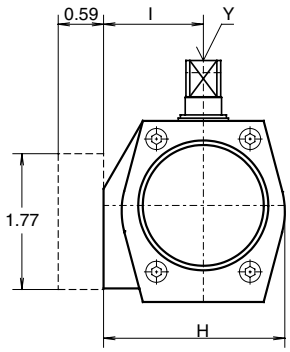


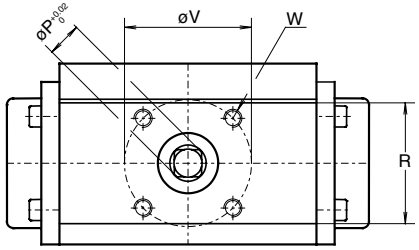


**DOUBLE ACTING TORQUE (ED)**

| Pressure | psi | 40 | 50 | 60 | 70 | 80 | 90 | 100 | 120 |
|---|---|---|---|---|---|---|---|---|---|
| Torque 90°/180° | (in.lb.) | 59 | 74 | 89 | 104 | 119 | 134 | 149 | 179 |

**SINGLE ACTING TORQUE (ES)**

| | | Air stroke | | | | | | Spring stroke | |
|---|---|---|---|---|---|---|---|---|---|
| Pressure | psi | 60 | | 80 | | 100 | | | |
| Position | - | start | end | start | end | start | end | start | end |
| Torque 90° | (in.lb.) | 48 | 23 | 80 | 55 | 112 | 87 | 64 | 41 |
| Torque 180° | (in.lb.) | 49 | 25 | 81 | 57 | 112 | 88 | 63 | 40 |

| Dim. in Inches | 90° | 180° |
|---|---|---|
| A ED | 4.06 | 6.10 |
| B ES | 4.65 | 8.50 |
| C | 2.36 | 2.36 |
| D | 0.79 | 0.79 |
| E | 0.63 | 0.63 |
| E2 | 0.91 | 0.91 |
| F | 0.39 | 0.39 |
| G | 0.47 | 0.47 |
| H | 2.36 | 2.36 |
| I | 1.30 | 1.30 |
| J | 0.83 | 0.83 |
| K | 0.50 | 0.50 |
| K1 | 0.25 | 0.25 |
| L | 1.00 | 1.00 |
| L1 | 2.00 | 2.00 |
| M | 0.65 | 0.65 |
| N | 0.039 | 0.039 |
| Omax. | 0.358 | 0.358 |
| Omin. | 0.354 | 0.354 |
| P | 0.476 | 0.476 |
| R | 1.57 | 1.57 |
| R1 | 1.57 | 1.57 |
| T | 1.57 | 1.57 |
| U | 1.22 | 1.22 |
| V | 1.654 | 1.654 |
| W | 10-24 UNCx.24" | 10-24 UNCx.24" |
| W1 | 10-24 UNCx.24" | 10-24 UNCx.24" |
| W2 | 10-24 UNCx.24" | 10-24 UNCx.24" |
| X | 1/8"NPT | 1/8"NPT |
| Y | M6x.48 | M6x.48 |


Copyright © Emerson Process Management. The information in this document is subject to change without notice.
Updated data sheets can be obtained from our website **www.El-O-Matic.com** or from your nearest Valve Automation Center ***USA**: +1 813 319 0266 **Europe**: +31 74 256 10 10 **Asia-Pacific:** +65 6501 4600*
EMERSON™ Process Management