**Service Manual**
SHSM-042210
April 22, 2010

# Shafer SH Series Actuator

## Service Manual

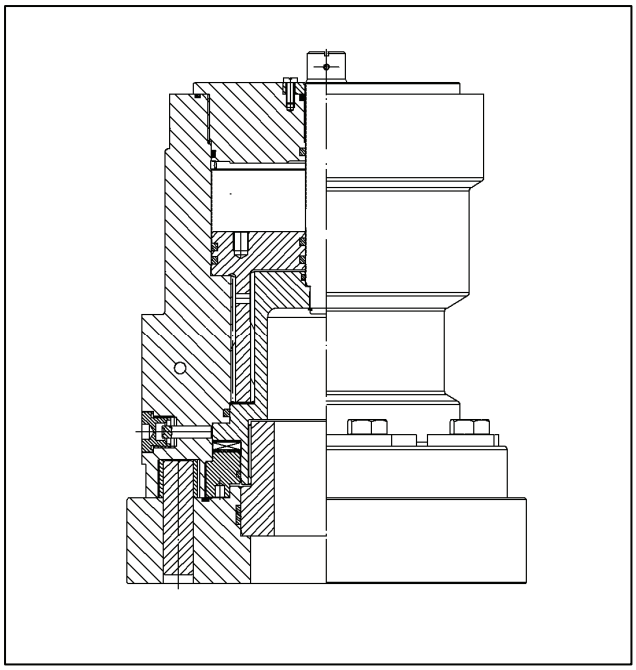

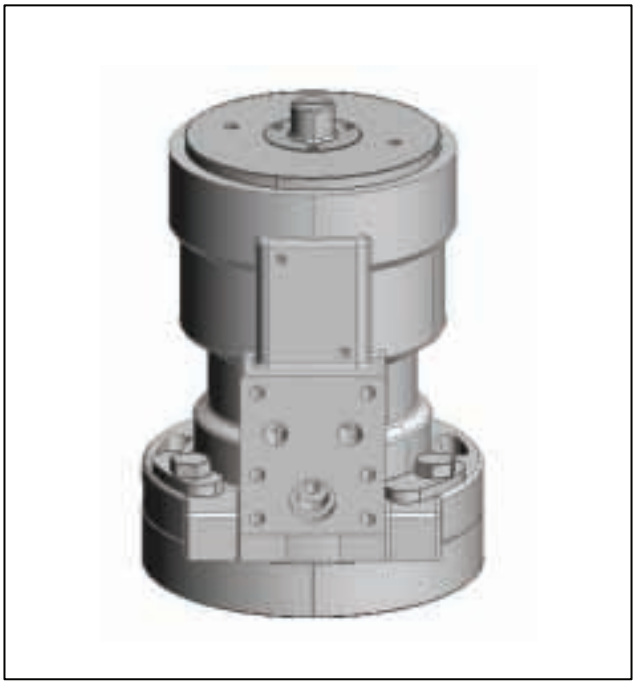

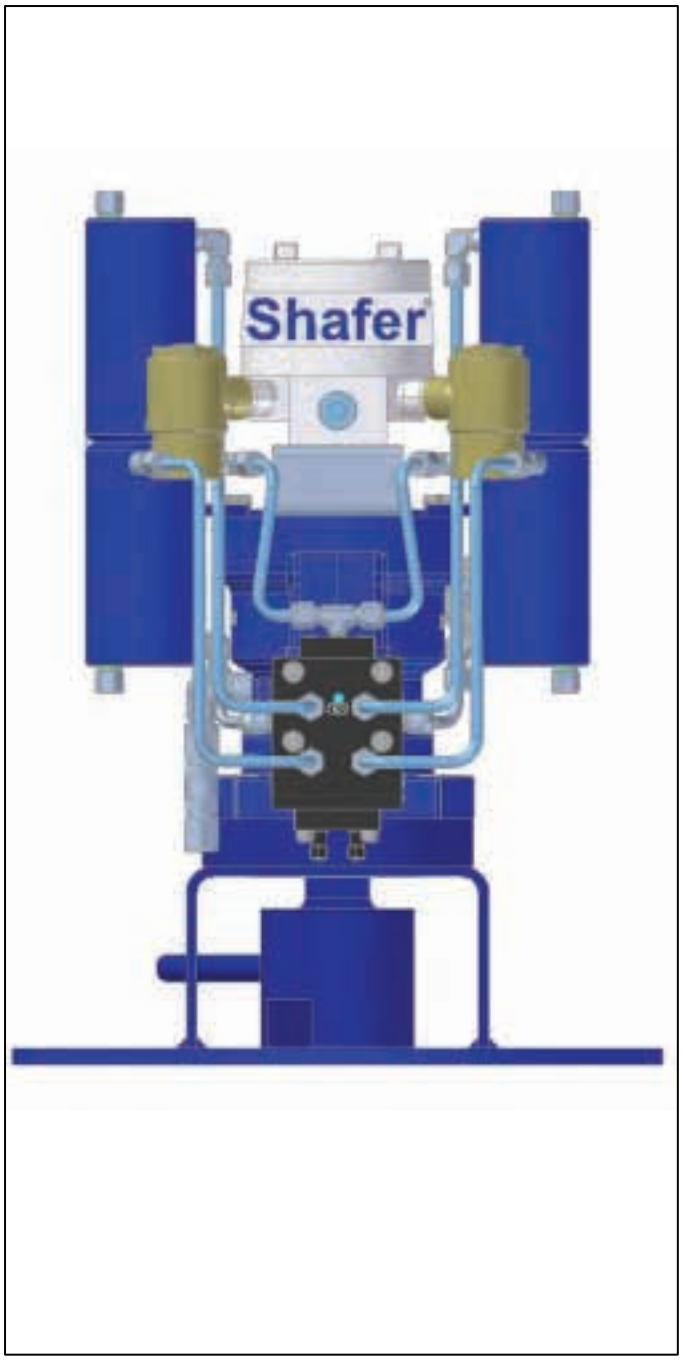


Shafer™
www.ShaferValve.com

EMERSON.
Process Management

## Table of Contents

Seal Replacement Instructions ..... 3
Before disassembly, empty all the fluid from the actuator ..... 3
Disassembly of actuator ..... 3
Before reassembly inspect all parts ..... 7
Installing Piston Seals ..... 7
Installing Top Cover Seals ..... 8
Installing Bottom Cover and Lower Housing Seals ..... 9
Install Crossover Valve in Housing (Stop Valve) ..... 9
Install the Piston in the Actuator Housing ..... 11
Install the Spline Shaft and Position Shaft ..... 12
Spline and Position Shafts installed in the Housing (Cylinder) ..... 13
Installing Thrust Bearing ..... 14
Install the Bottom Cover ..... 15
Install the Yoke ..... 16
Final Test ..... 16
Appendix I: SH 4.5 Layout and Parts List ..... 18
Appendix II: SH 9.0 Layout and Parts List ..... 20
Appendix III: SH 18.0 Layout and Parts List ..... 22

# Seal Replacement Instructions

## *Before disassembly, empty all the fluid from the actuator*

1. Empty the fluid from the actuator by suspending it over a suitable catch pan, with the open and close ports down. Turn the actuator to the open and close position a few times. Carefully use compressed air to turn the actuator.
2. Leave the actuator in the closed position for disassembly, i.e. the groove on the position shaft has to be parallel to the port surface. See Figure 1.

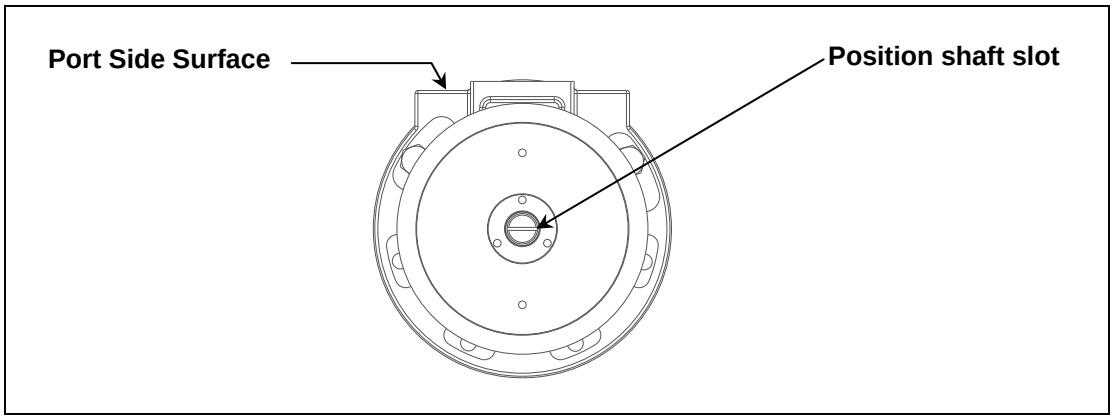


**Figure 1: Actuator in Valve Closed Position**

## *Disassembly of actuator*

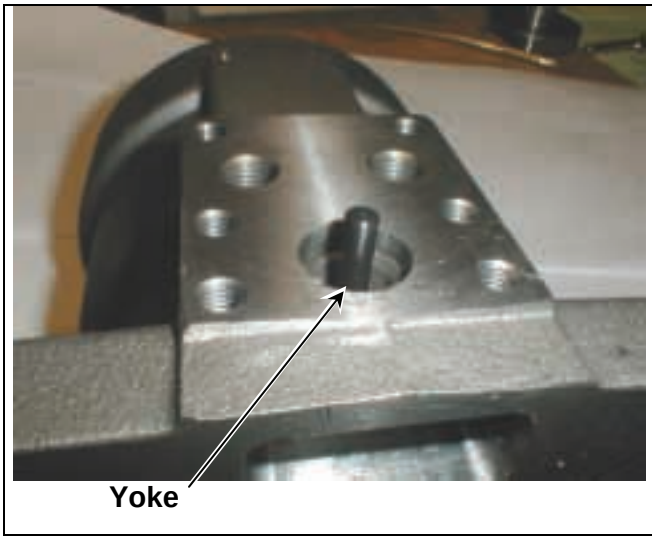


**Figure 2: Yoke**

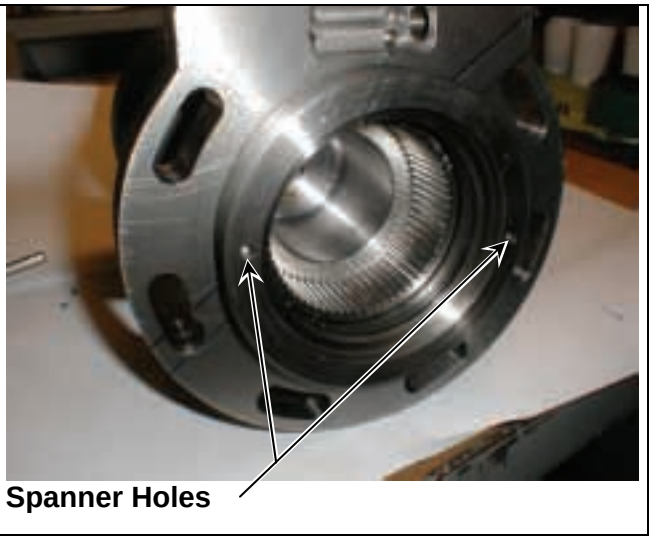


**Figure 3: Spanner Holes**

1. Remove 3/8 plug and pull the yoke out, see Figure 2.
2. Remove the bottom cover with a pin spanner or two dowel pins and a piece of flat stock. Turn the bottom cover counter-clockwise to loosen, see Figure 3.

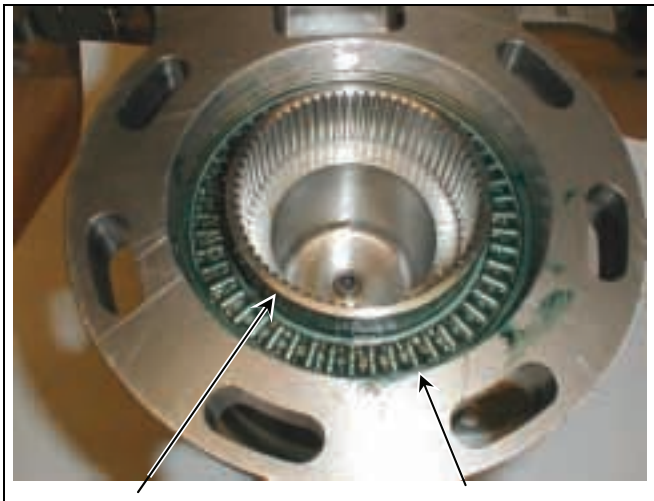


**Figure 4: Spline Shaft and Thrust Bearing**

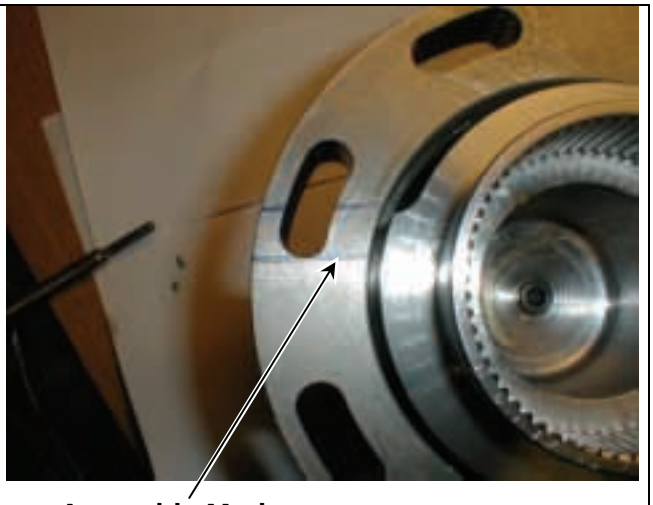


**Figure 5: Assembly Marks**

3. Remove the spline shaft, and thrust bearing. The spline shaft can be removed by tapping the position shaft with a nylon hammer. When the thrust bearing is exposed, remove and set parts aside for reassembly. Use utmost caution to keep all internal parts clean

4. Make note of the marks on the spline shaft and housing for reassembly purposes, improve them if needed.

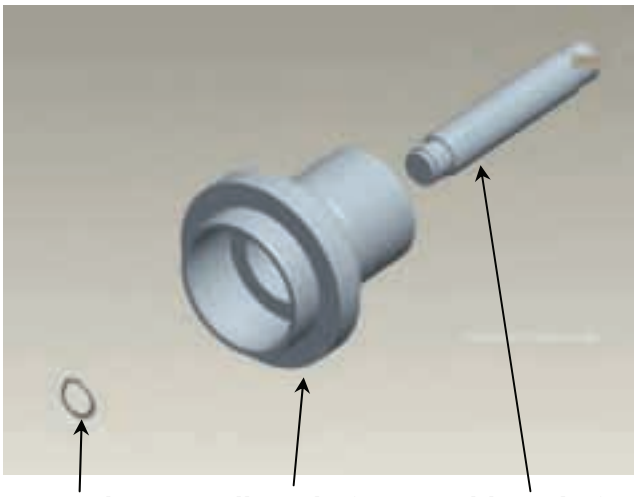


**Figure 6: Position/Spline Shaft Assembly**

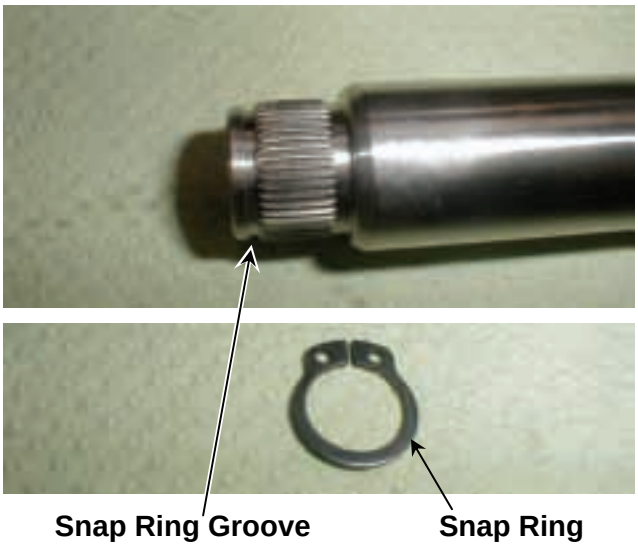


**Figure 7: Position Shaft and Snap Ring**

5. Remove the position shaft from the spline shaft. The position shaft is inserted into the spline shaft and retained with an external snap ring on the positon shaft. Reaching inside of the spline shaft, with a pair of snap ring pliers, remove the snap ring and pull the position shaft out of the spline shaft.

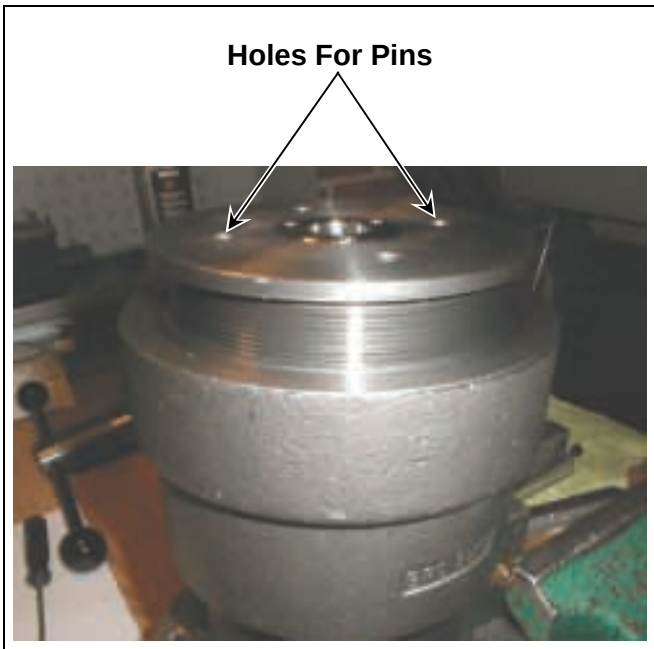


**Figure 8: Top Cover Removal**

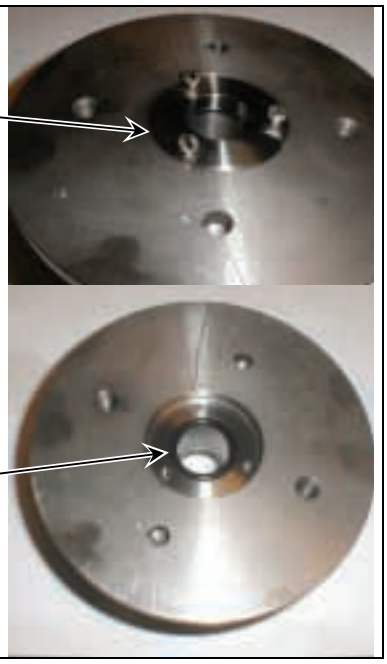


**Figure 9: Top Shaft Seal Cover**

6. Remove the top cover using a pin spanner or two dowel pins fitting the holes in the cover and a piece of flat stock. The cover turns clockwise to loosen.
7. Loosen the slotted screws retaining the top shaft seal cover exposing the O-ring.

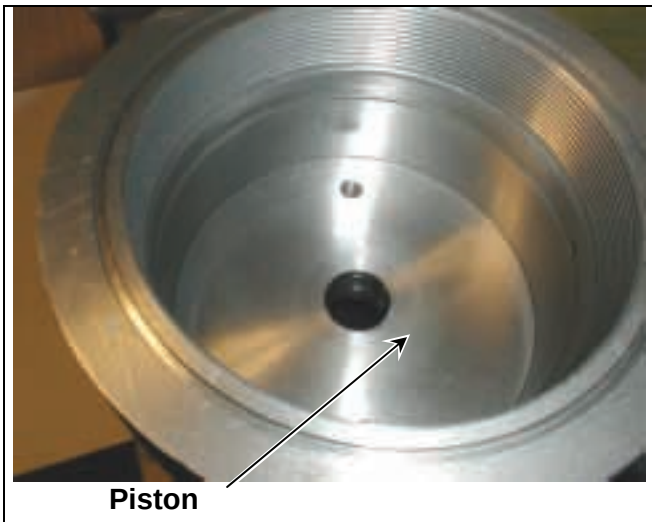


**Figure 10: Piston Inside of Cylinder**

**Figure 11: Piston Removal Tool**

8. The piston may be removed by use of special tools, rotating it, counter-clockwise, in its spline. Without the special tools see Step 9 and Figure 12.

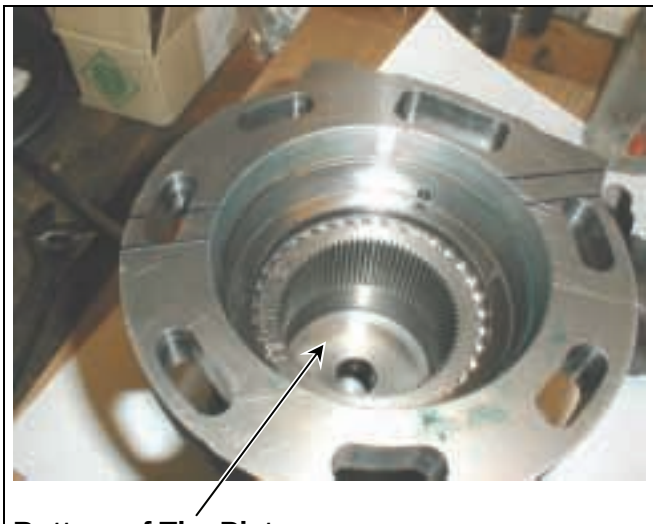


**Figure 12: For Piston Removal Removal**

**Figure 13: Piston Removed From Cylinder**

9. Use a cylindrical tool such as a pipe to bump the piston from the bottom, use care not to damage the piston or mark up the inside of the cylinder in the process.

**Figure 14: Removal of Crossover Valve**

**Figure 15: Crossover Valve and Seat Removed**

10. Should the parts, or seals, need replaced in the crossover valve, remove valve as shown in Figure 14. The valve seat may not follow while removing the housing and stem. In this case use a small rod in the bore below the seat to assist in pulling the seat. Seals are called out in the reassembly instructions.

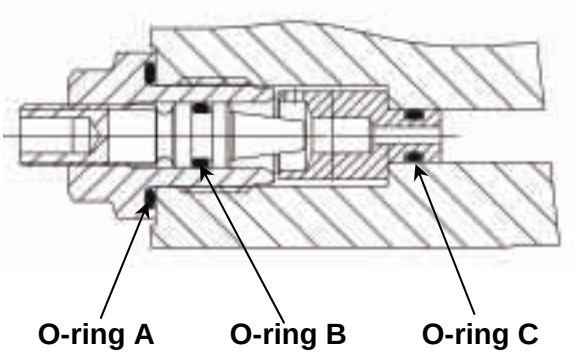


**Figure 16: Crossover Valve Seal Placement**

## *Before reassembly inspect all parts*

1. Assembly of the actuator must be carried out in a clean enviroment. Before assembly, inspect all parts for damage and ensure they are clean. Parts must be free of burrs, nicks and chips. It is essential not to allow any dirt or derbis to enter the reassembled actuator.
2. All seals and parts must be lubricated during assembly, so have on hand some clean system fluid and some standard bearing grease. It may be helpful to lay the O-rings and X-rings in a pan of clean system fluid before installing.

## *Installing Piston Seals*

**Figure 17: Piston**

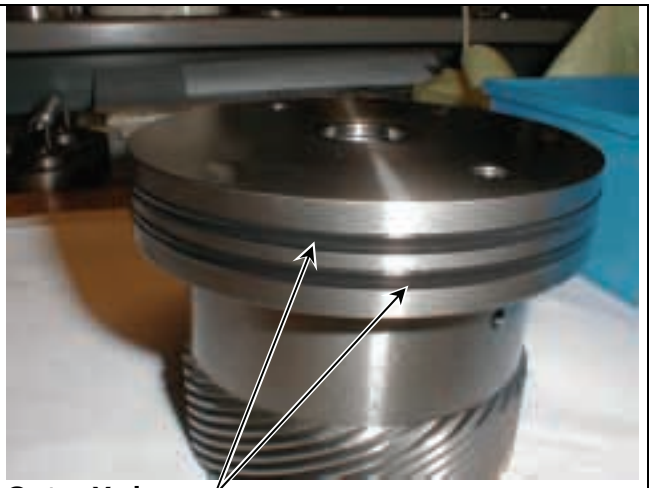


**Figure 18: Piston and Outer X-rings**

1. Inspect piston, as with all parts, before assembly.
2. Install the outer X-rings on the piston.

**Figure 19: Installing Lower Inner X-ring**

**Figure 20: Installing the Upper Inner X-ring**

3. Install the inner X-rings in the piston bore. Install the lower ring first then the upper one, see Figures 19 and 20.

## *Installing Top Cover Seals*

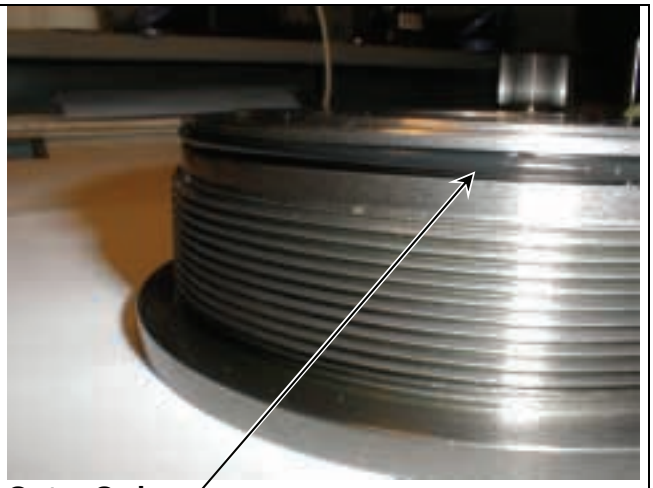


**Figure 21: Top Cover Inner X-ring** **Figure 22: Top Cover Outer O-ring**

1. Place the top cover on a bench with the top down and install the inner X-ring and outer O-ring as shown in Figures 21 and 22.

**Figure 23: Installing the Shaft O-ring** **Figure 24: Installing the Shaft O-ring Cover**

2. Turn the top cover over and place the shaft O-ring in its groove, see Figute 23. Position the shaft O-ring cover and install the slotted screws. Tighten the screws to 18 inch pounds (2 Nm) of torque.

## *Installing Bottom Cover and Lower Housing Seals*

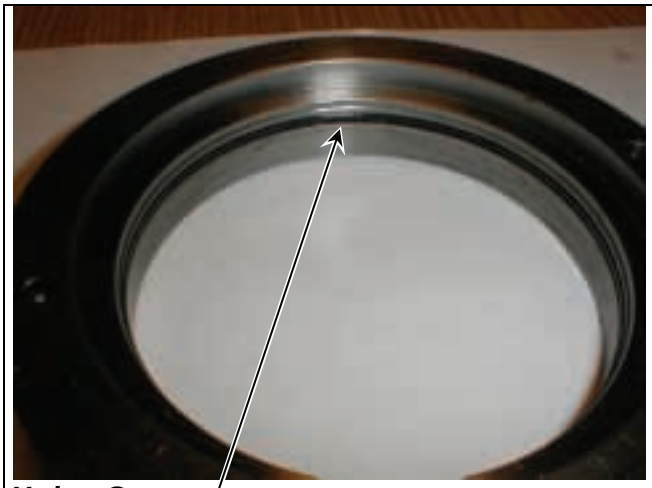


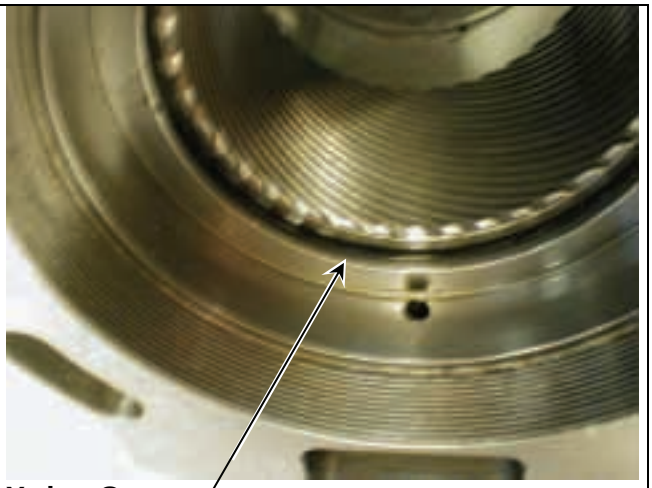


**Figure 25: Bottom Cover**

**Figure 26: Lower End of Housing (Cylinder)**

1. Install X-ring in its groove in the the bottom cover.
2. Install X-ring in the groove in the lower end of the housing.

## *Install Crossover Valve in Housing (Stop Valve)*

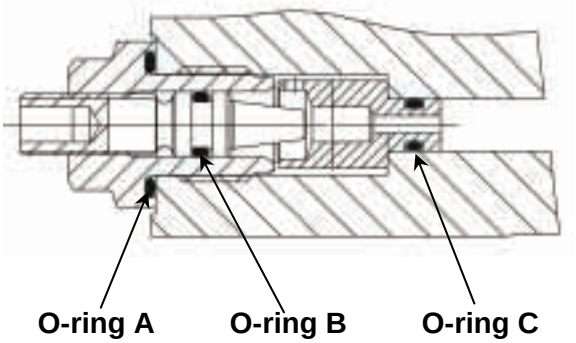


**A. O-ring 568-014-479-70**
**B. O-ring 568-007-479-70**
**C. O-ring 568-006-479-70**

**Figure 27: Crossover Valve Assembly**

**Figure 28: Seals On Valve Assembly**

1. Ensure the O-ring on the valve seat is well lubricated before inserting into the housing.

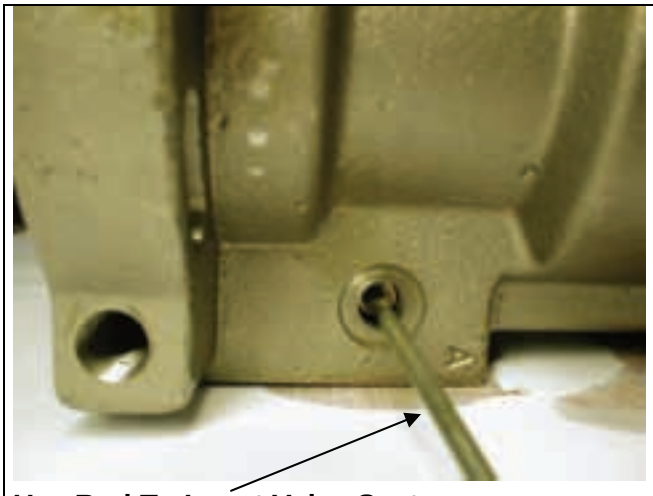


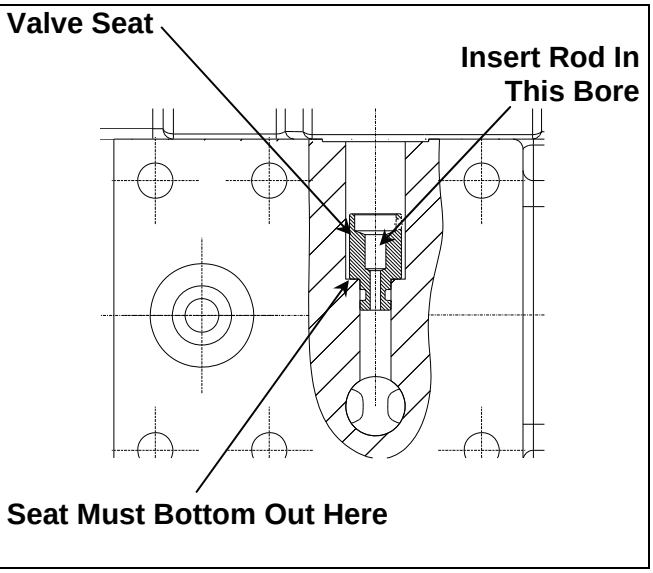


**Figure 29: Tool To Insert Valve Seat** **Figure 30: Valve Seat Installed**

2. A small rod, inserted in the smaller bore under the seat, will aid in installing the valve seat. Make sure the seat is not damaged in the process, see Figures 28 and 29.
3. Use a 13mm hex key to turn the stem counter-clockwise to loosen so the valve does not hit the seat while installing the valve in the cylinder.

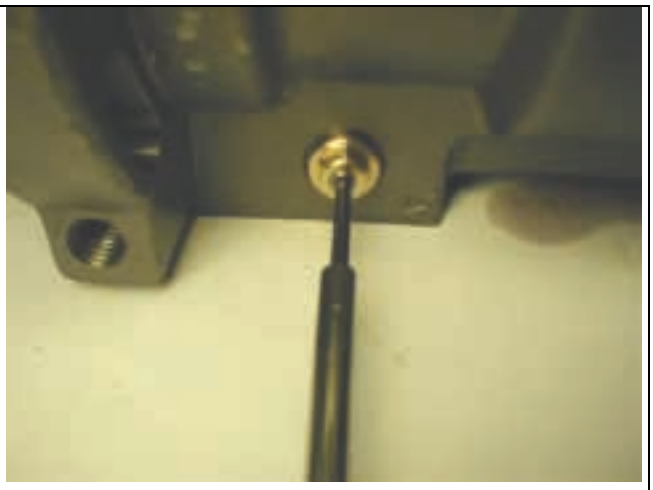

**Figure 31: Valve Installed In Cylinder** **Figure 32: Tightening the stem to close the valve**

4. Use an open end wrench to tighten the valve housing in the cylinder. Note: The stem must be loosened to ensure the valve is not hitting the valve seat during this process.
5. After the valve assembly has been tightened in the cylinder, use a 13mm hex key to turn the stem in the clockwise direction closing the valve. Tighten to 27 inch pounds (3Nm). Most Shafer applications require this valve remains closed all the time.

## *Install the Piston in the Actuator Housing*

**Figure 33: Install Piston**

**Figure 34: Installation Tool for Piston**

1. Lubricate the spline on the piston and inside of the cylinder. Place the piston in the cylinder. Turn the piston clockwise until the spline is in mesh.
2. The piston may be pushed on into the cylinder with use of an installation tool. In the absence of an installation tool tap the piston with a nylon hammer. Note: The spline must be in mesh before any force is applied. Use a cylindrical tool (pipe) after the hammer head will no longer reach the piston.

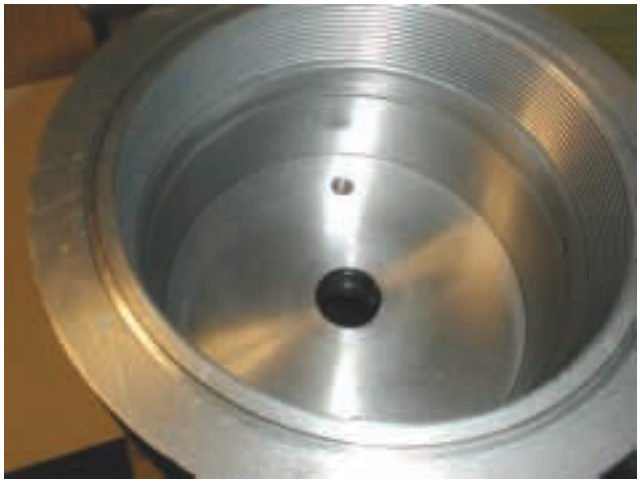

**Figure 35: Piston Shown Installed**

**Figure 36: Install the Top Cover**

3. With the piston bottomed out as shown in Figure 35, lubricate the threads and install the top cover.
4. Using a pin spanner, tighten the top cover to the following torque requirements:

   SH 4.5 = 184 ft-lb (250 Nm)

   SH 9.0 = 184 ft-lb (250 Nm)

   SH 18.0 = 221 ft-lb (300 Nm)

## *Install the Spline Shaft and Position Shaft*

**Figure 37: Position Shaft**

**Figure 38: Snap Ring**

1. The spline shaft is held in position with a snap ring in the groove provided.

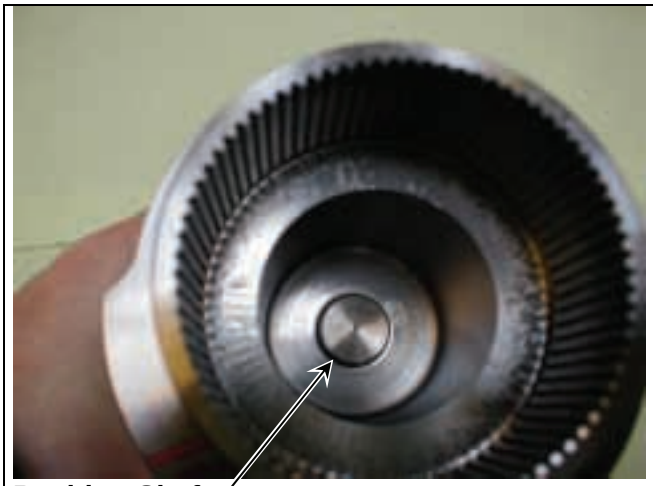


**Figure 39: Position Shaft and Spline Shaft**

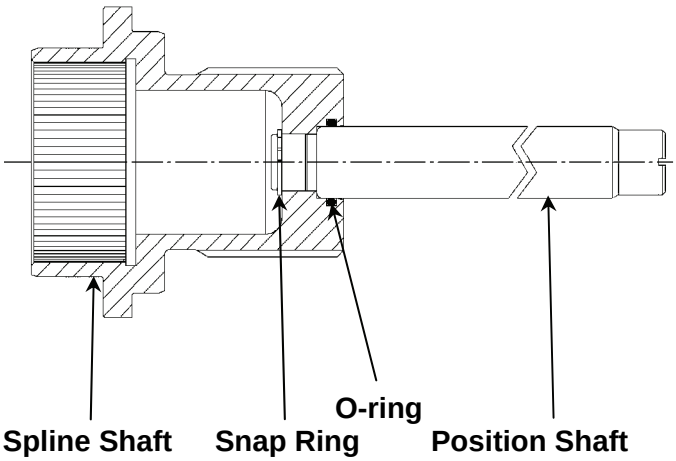


**Figure 40: Spline Shaft Assembly**

1. Insert lubricated O-ring in the groove inside the small end of the spline shaft, Figure 40.
2. Slide the position shaft into the spline shaft as shown in Figures 39 and 40.
3. Lock the position shaft in place with the snap ring.
4. Put a thin layer of bearing grease on the cam surface, see Figure 41.

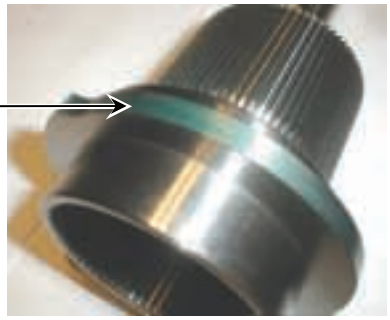


**Figure 41: Lubricate the Cam**

## *Spline and Position Shafts installed in the Housing (Cylinder)*

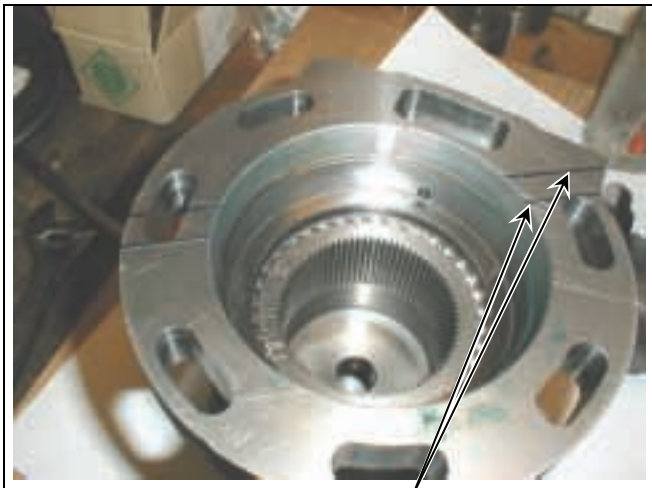


**Figure 42: Housing Ready for Spline Shaft**

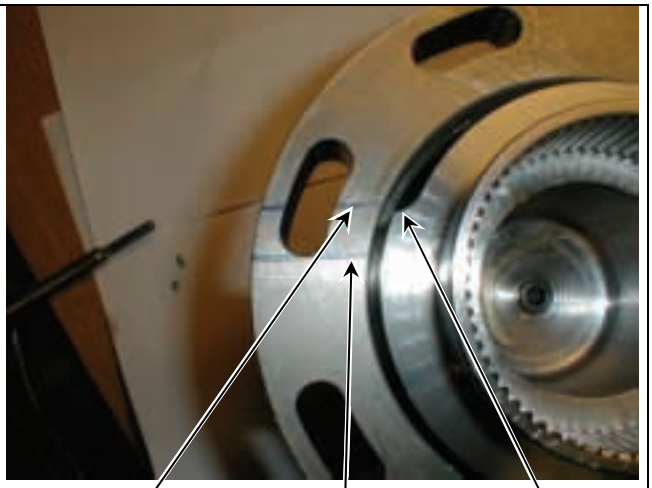


**Figure 43: Spline Shaft Alignment**

1. Line the cam up with the max. line as shown in Figure 43. Then turn the spline shaft counter-clockwise until the splines are in mesh (keep within Min. dimension).
2. Push the spline shaft into place.

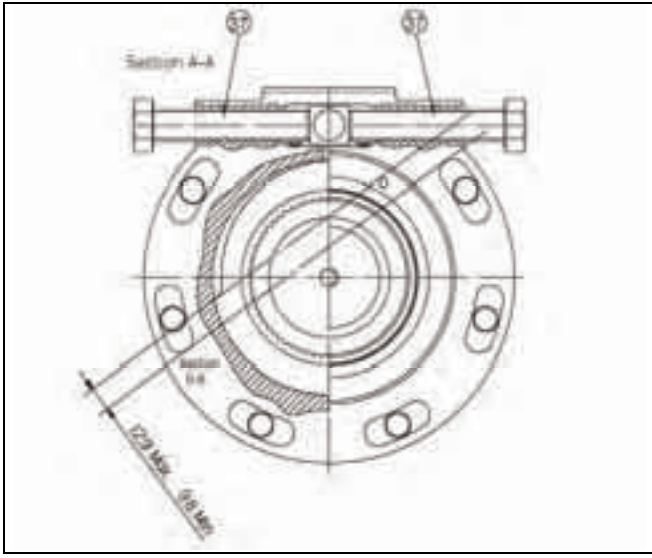

**Figure 44: Assembly Drawing Inset**

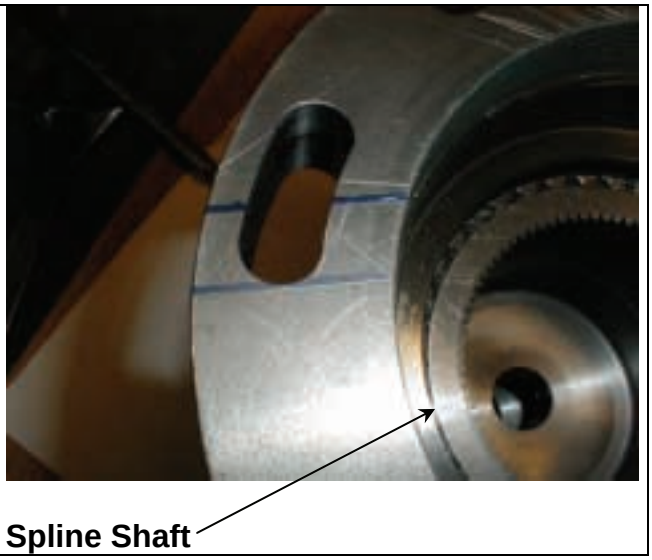


**Figure 45: Spline Shaft Shown Installed**

## *Installing Thrust Bearing*

1. Have on hand a small quantity of good bearing grease.
2. All parts must be clean.

**Figure 46: Thrust Bearing Assembly**

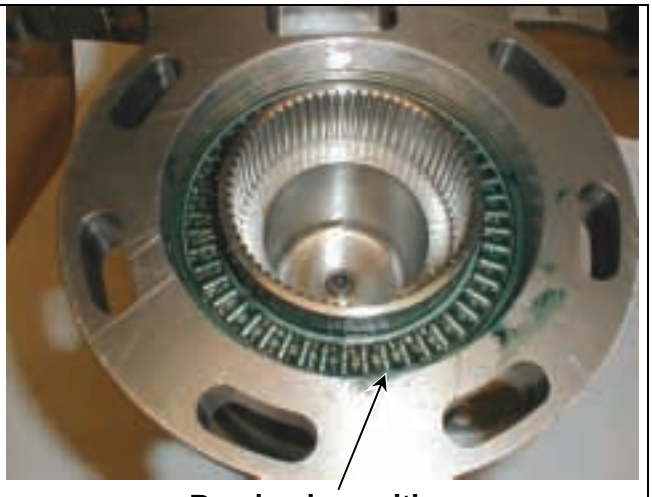


**Figure 47: Thrust Bearing Placed In Position**

3. Place inner thrust washer in position in the actuator.
4. Using an ample amount of grease, grease the thrust bearing on one side. With the greased side down, place the bearing in position on the installed thrust washer.
5. Grease the remaining side of the bearing and place the outer thrust washer on top of the bearing.

**Figure 48: Completed Thrust Bearing Installation**

## *Install the Bottom Cover*

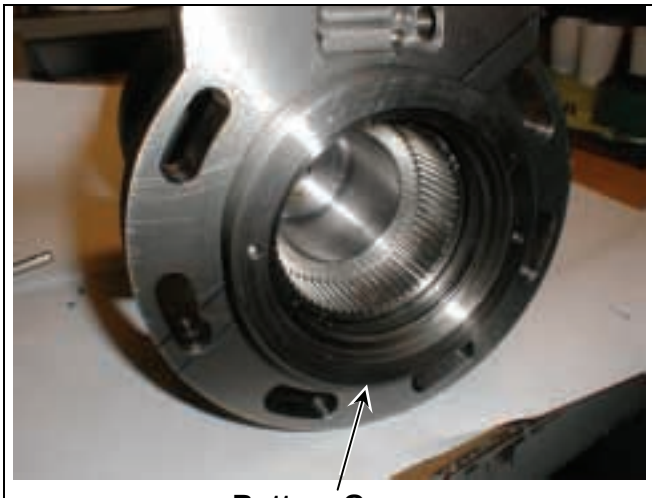


**Figure 49: Installing Bottom Cover**

**Figure 50: Bottom Cover Special Tool**

1. Lubricate the threads and install the bottom cover.
2. Tighten tie bottom cover using a special tool or pin spanner. The torque requirements for the bottom cover are:

| | |
|---|---|
| SH 4.5 = | 111 ft/lb (150 Nm) |
| SH 9.0 = | 111 ft/lb (150 Nm) |
| SH 18.0 = | 133 ft/lb (180 Nm) |

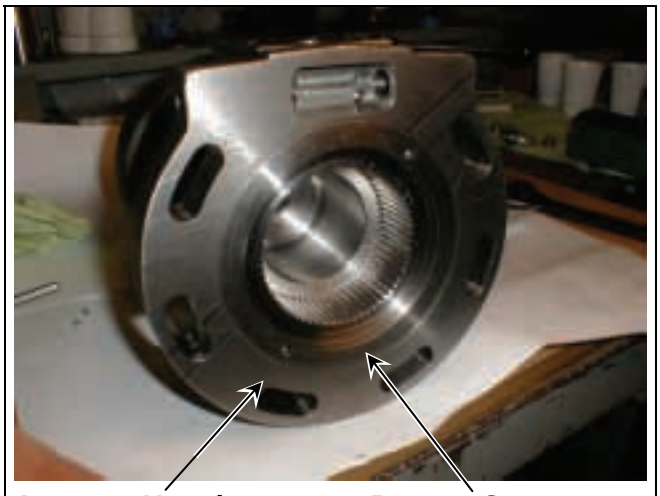


**Figure 51: Check with Straightedge**

3. Use a straightedge to check to see that the surface of the bottom cover is below the surface of the actuator housing. If the bottom cover is above the actuator housing, the assembly is not correct and will have to be dismantled to find the problem.

## *Install the Yoke*

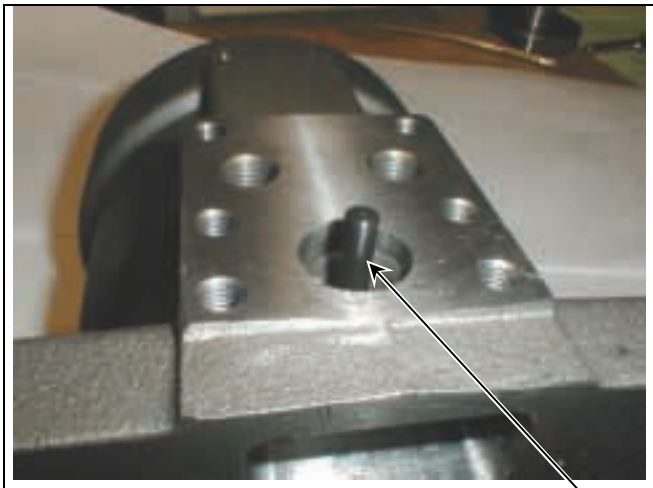

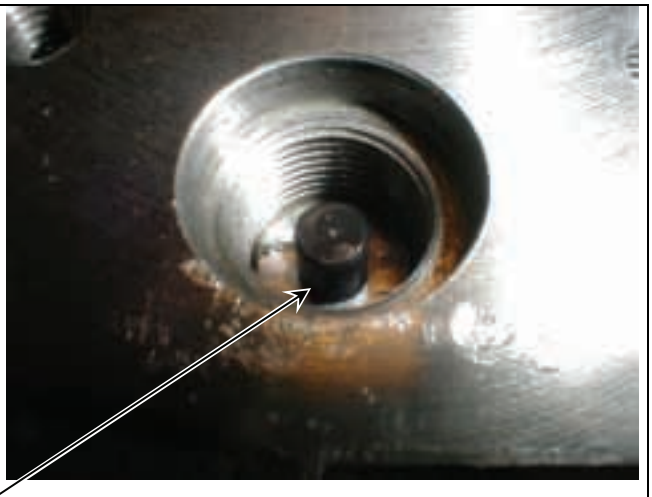

**Yoke**

**Figure 52: Yoke Installation** **Figure 53: Yoke In Place**

1. Lubricate with system fluid and slide yoke in place. It must fit easily in the hole.
2. Replace the 3/8 retainer plug.

## *Final Test*

1. Test the operation of the actuator with shop air, about 45 PSI (3 bar) should meet the requirement.
2. Check to see it is moving 90°.
3. Now the actuator can be tested hydraulically.

# Notes:

# Appendix I: SH 4.5 Layout and Parts List

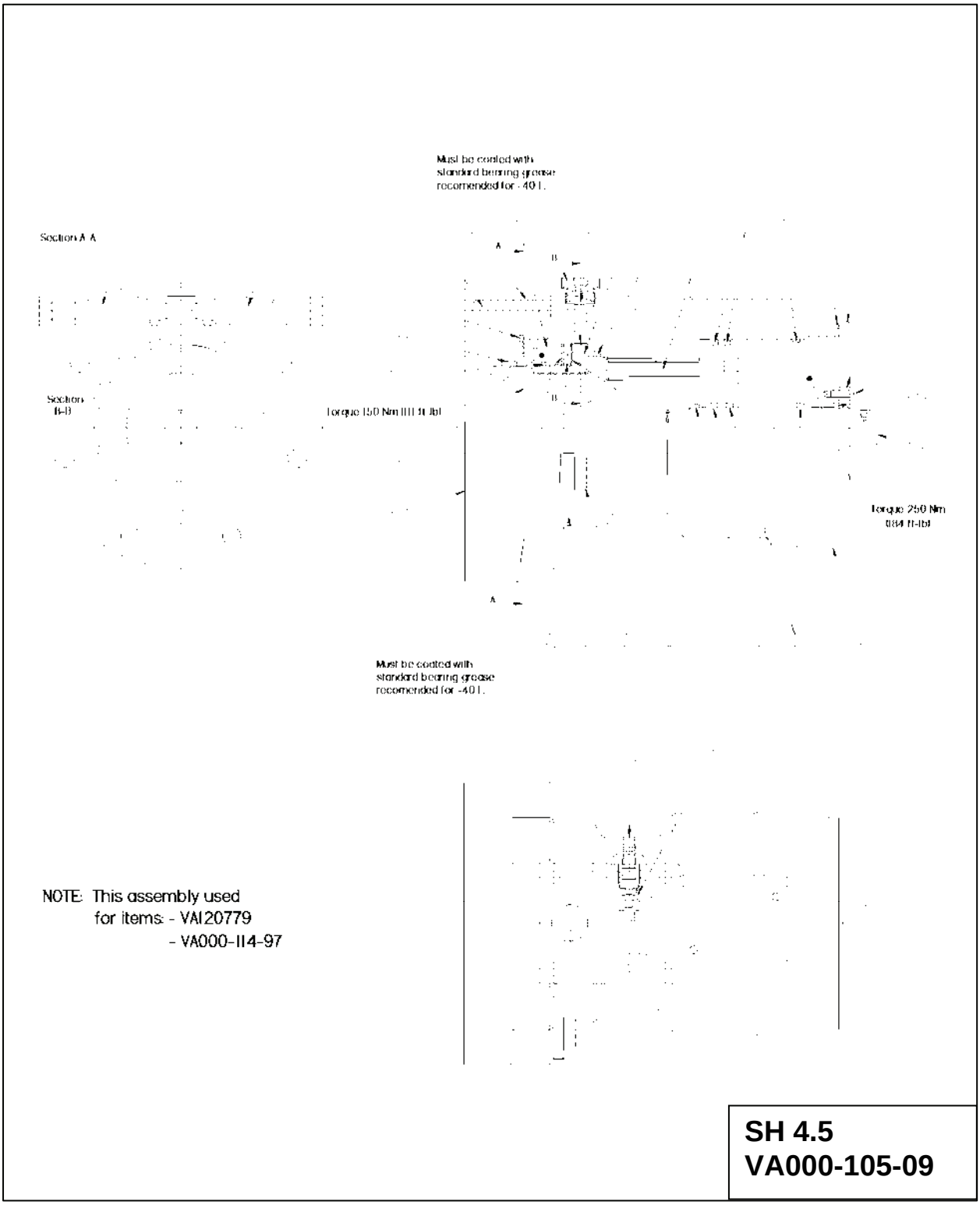

| BILL OF MATERIALS AND SPARE PARTS LIST FOR SH 4.5 | SH Series Actuator |
|---|---|
| Bill of Material no.: **VA000-105-09** | Page 1 of 1 |
| Notes: Order all items with a listed material number as spare parts.<br>When ordering spare parts: please state material number. | |
| Reference Drawing: VA000-105-09 | |

| Balloon Number | Material | Description/Compound | Quan. |
|---|---|---|---|
| 1 | GGG 40 Duct. Iron | HOUSING BRC 1000 | 1 |
| 2 | GGG 40 Duct. Iron | Piston BRC 1000 | 1 |
| 3 | 160N0601 | Top Cover BRC 1000 (GG40) | 1 |
| 4 | 160N0787 | Pos. Shaft BRC 1000 BRC B1 (X5CRNiMo17 12 2) | 1 |
| 5 | 160N0788 | Splined Shaft BRC 1000 B1 OVAKO 520M | 1 |
| 6 | 160N0605 | Bottom Cover BRC 1000 (GGG40) | 1 |
| 7 | 160N0843 | Shaft Seal Cover BRC 1000-2000-4000-8000-16000 (X5CRNiMo17 13 3) | 1 |
| 9 | Buna-N | X-Ring 212 70 Duro | 3 |
| 10 | Buna-N | X-Ring 149 70 Duro | 1 |
| 11 | Buna-N | X-Ring 236 70 Duro | 1 |
| 12 | Buna-N | X-Ring 239 70 Duro | 2 |
| 13 | Buna-N | O-Ring 875 ID x .094 479 70 | 1 |
| 14 | Buna-N | O-Ring 568-212 479 70 | 1 |
| 15 | Buna-N | O-Ring 568-157 479 70 | 1 |
| 16 | Buna-N | O-Ring 568-254 479 70 | 1 |
| 17 | 251-1531 | Screw M4 X 16 | 3 |
| 18 | 267-0014 | Snap Ring External Ø17 | 1 |
| 19 | 390-0014 | Thrust Bearing Ø70 USt.13 | 1 |
| 20 | 390-0114 | Thrust Washer Ø70 100Cr6 | 2 |
| | | | |
| 23 | 160G2280 | Stop Valve Ø4 | 1 |
| | | | |
| 26 | 160N1049 | Valve Seat NBR 70 | 1 |
| 27 | 160G5044 | Plug 3/8 Inch WG CuZn39PPb3 (W.no.2.0401) | 1 |
| 28 | 160B4503 | Yoke F. DPI BRC 1000 – 2000 L=27.75 POM –C | 1 |
| | | | |
| 32 | 160N1020 | Bearing for Alignment BRC 1000 | 1 |
| 33 | 160N0609 | Banana Washer BRC 1000 | 6 |
| 34 | 160N0611 | Bearing Strip | 1 |
| 35 | Buna N | O-ring 568-154 479-70 | 1 |
| 36 | 251-2132 | Screw M10 x 40 | 6 |
| 37 | 250-1682 | Screw M10 x 65 | 2 |
| 38 | 271-2285 | Cylinder Pin 012 x 40 | 1 |
| 39 | 160N0610 | Adapter | 1 |
| 40 | 160N0646 | Flange Adapter BRC 1000 | 1 |
| | | | |

# Appendix II: SH 9.0 Layout and Parts List

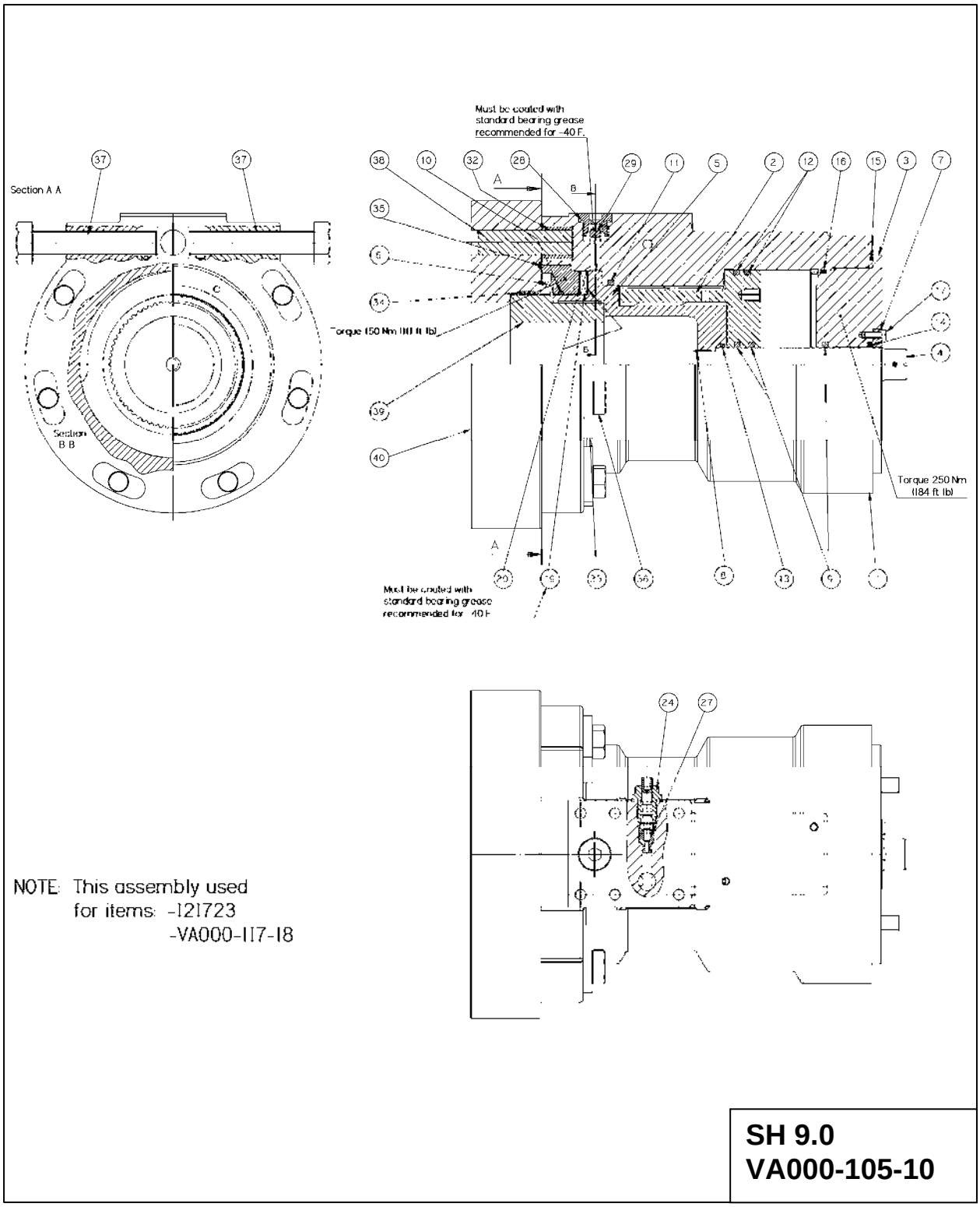

| **BILL OF MATERIALS AND SPARE PARTS LIST FOR SH9.0** | **SH Series Actuator** |
|---|---|
| Bill of Material no.: **VA000-105-10** | Page 1 of 1 |
| Notes: Order all items with a listed material number as spare parts.<br>When ordering spare parts, please state material number. | |
| Reference Drawing: VA000-105-10 | |

| **Balloon Number** | **Material** | **Description/Compound** | **Quan.** |
|---|---|---|---|
| 1 | GGG 40 Duct. Iron | HOUSING BRC 2000 | 1 |
| 2 | GGG 40 Duct. Iron | Piston BRC 2000 | 1 |
| 3 | 160N0562 | Top Cover BRC 2000 (GGG40) | 1 |
| 4 | 160N0789 | Pos. Shaft BRC 2000 (X5CrNiMo17 12 2) | 1 |
| 5 | 160N0790 | Splined Shaft BRC 2000 B1 OVAKO 520M | 1 |
| 6 | 160N0566 | Bottom Cover BRC 2000 (GGG40) | 1 |
| 7 | 160N0843 | Shaft Seal Cover BRC 1000-2000-4000-8000-16000 (X5CRNiMo17 13 3) | 1 |
| 9 | Buna-N | X-Ring -212 70 Duro. | 3 |
| 10 | Buna-N | X-Ring -154 70 Duro. | 10 |
| 11 | Buna-N | X-Ring -243 70 Duro. | 10 |
| 12 | Buna-N | X-Ring -246 70 Duro. | 2 |
| 13 | Buna-N | O-Ring .875 ID x .094 479-70 | 1 |
| 14 | Buna-N | O-Ring 568-212 479-70 | 1 |
| 15 | Buna-N | O-Ring 6.496 X .079 479-70 | 1 |
| 16 | Buna | O-Ring 568-162 479-70 | 1 |
| 17 | 251-1531 | Screw M4 X 16 (X5CrNiMo18 12) | 3 |
| 18 | 267-0014 | Snap Ring External Ø 17 | 1 |
| 19 | 390-0018 | Thrust Bearing Ø90 (USt.13) | 1 |
| 20 | 390-0118 | Thrust Washer Ø90 (100Cr6) | 2 |
| | | | 2 |
| 24 | 160G2280 | Stop Valve Ø4 | 1 |
| | | | 1 |
| 27 | 160N1049 | Valve Seat | 1 |
| 28 | 160G5044 | Plug 3/8 Inch WG | 1 |
| 29 | 160B4503 | Yoke F. DPI BRC 1000 - 2000, L=27.75 | 1 |
| | | | 2 |
| 32 | 160N0567 | Bearing for Angle Adjustment BRC 2000 | 1 |
| 33 | 160N0571 | Banana Washer BRC 2000 | 6 |
| 34 | 160N0577 Teflon® | Bearing Strip | 1 |
| 35 | Buna-N | O-Ring 568-158 479-70 | 1 |
| 36 | 251-2157 | Screw M12 X 50 | 6 |
| 37 | 251-1781 | Screw M16 X 80 | 2 |
| 38 | 271-2370 | Cylinder Pin 016 X 50 | 1 |
| 39 | 160N0574 | Adapter BRC 2000 | 1 |
| 40 | 160N0647 | Flange Adapter BRC2000 | 1 |

# Appendix III: SH 18.0 Layout and Parts List

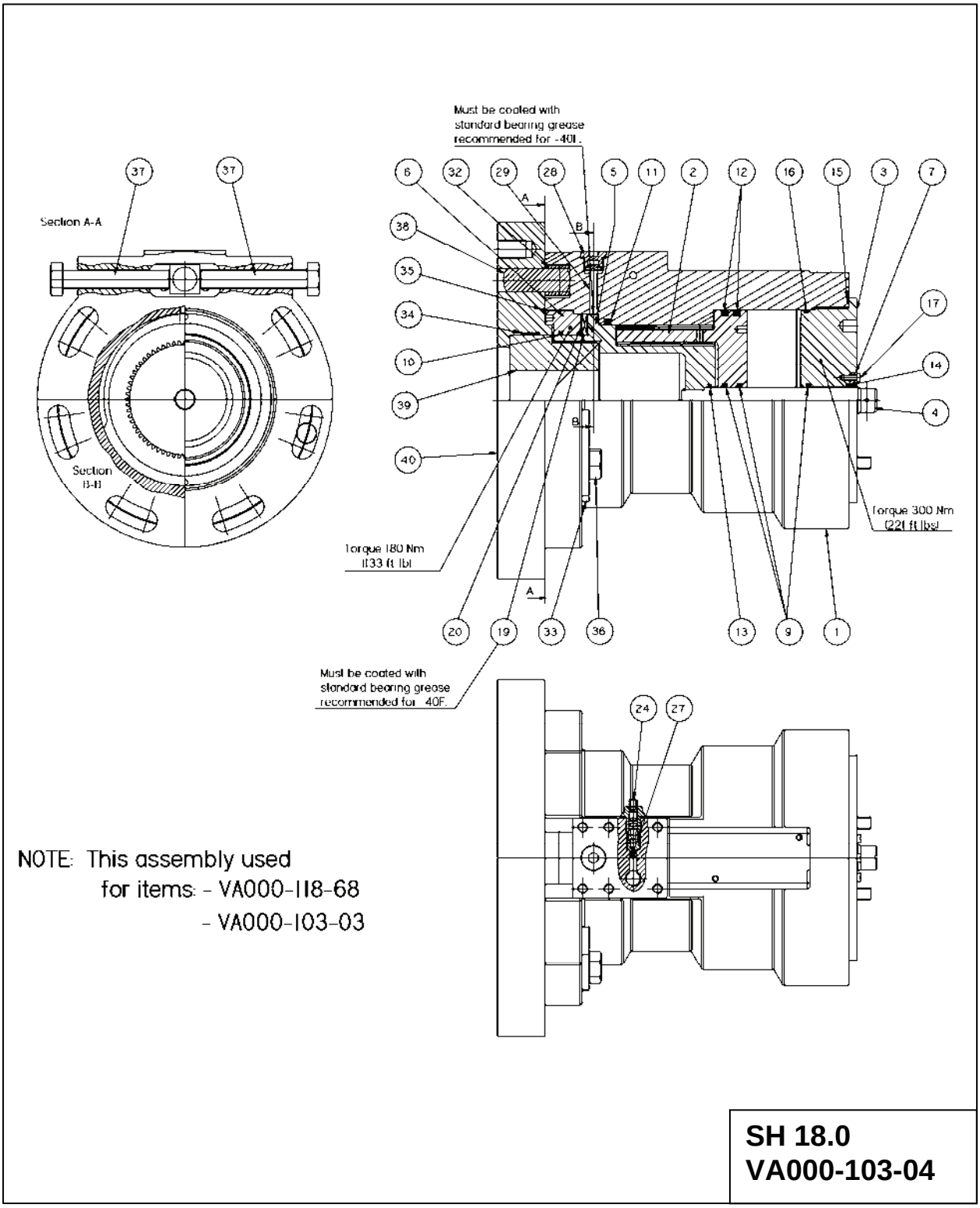


| BILL OF MATERIALS AND SPARE PARTS LIST FOR SH 18.0 | SH Series Actuator |
|---|---|

| Bill of Material no.: **VA000-103-04** | Page 1 of 1 |
|---|---|
| Notes: Order all items with a listed material number as spare parts.<br>When ordering spare parts, please state material number. | |
| Reference Drawing: VA000-103-04 | |

| Balloon Number | Material | Description/Compound | Quan. |
|---|---|---|---|
| 1 | GGG 40 Duct. Iron | HOUSING BRC 4000 | 1 |
| 2 | GGG 40 Duct. Iron | Piston BRC 4000 | 1 |
| 3 | 160N0613 | Top Cover BRC 4000 | 1 |
| 4 | 160N0791 | Pos. Shaft BRC 4000 (X5CrNiMo17 12 2) | 1 |
| 5 | 160N0792 | Splined Shaft BRC 4000 B1 OVAKO 520M | 1 |
| 6 | 160N0617 | Bottom Cover BRC 4000 (GGG40) | 1 |
| 7 | 160N0843 | Shaft Seal Cover BRC 1000-2000-4000-8000-16000 (X5CRNiMo17 13 3) | 1 |
| 9 | Buna-N | X-Ring -212 70 Duro. | 3 |
| 10 | Buna-N | X-Ring -245 70 Duro. | 10 |
| 11 | Buna-N | X-Ring -355 70 Duro. | 10 |
| 12 | Buna-N | X-Ring -357 70 Duro. | 2 |
| 13 | Buna-N | O-Ring .875 ID x .094 479-70 | 1 |
| 14 | Buna-N | O-Ring 568-212 479-70 | 1 |
| 15 | Buna-N | O-Ring 6.496 X .0.79 479-70 | 1 |
| 16 | Buna | O-Ring 568-162 479-70 | 1 |
| 17 | 251-1531 | Screw M4 X 16 (X5CrNiMo18 12) | 3 |
| 18 | 267-0014 | Snap Ring External Ø17 | 1 |
| 19 | 390-0018 | Thrust Bearing Ø110 (USt.13) | 1 |
| 20 | 390-0118 | Thrust Washer Ø110 (100Cr6) | 2 |
| | | | 2 |
| 24 | 160G2280 | Stop Valve Ø4 | 1 |
| | | | 1 |
| 27 | 160N1049 | Valve Seat | 1 |
| 28 | 160G5044 | Plug 3/8 Inch WG | 1 |
| 29 | 160B4504 | Yoke F. DPI BRC 4000, L=42.50 | 1 |
| | | | 2 |
| 32 | 160N0620 | Bearing for Angle Adjustment BRC 4000 | 1 |
| 33 | 160N0621 | Banana Washer BRC 4000 | 6 |
| 34 | 160N0622 Teflon® | Bearing Strip | 1 |
| 35 | Buna-N | O-Ring 568-162 479-70 | 1 |
| 36 | 251-2176 | Screw M16 X 60 | 6 |
| 37 | 251-8299 | Screw M16 X 60 | 2 |
| 38 | 271-2418 | Cylinder Pin 012 X 40 | 1 |
| 39 | 160N0619 | Adapter BRC 4000 | 1 |
| 40 | 160N0648 | Flange Adapter BRC4000 | 1 |

### *North & South America*

18703 GH Circle
PO Box 508
Waller, Texas 77484
USA
T +1 281 727 5300
F +1 281 727 5353

2500 Park Avenue West
Mansfield, Ohio 44906
USA
T +1 419 529 4311
F +1 419 529 3688

9009 King Palm Drive
Tampa, Florida 33619
USA
T +1 813 630 2255
F +1 813 630 9449

4112-91A Street
Edmonton, Alberta T6E5V2
Canada
T +1 780 450 3600
F +1 789 450 1400

AV. Hollingsworth, 325
Iporanga
Sorocaba, SP 18087-105
Brazil
T +55 15 3238 3788
F +55 15 3228 3300

### *Europe*

Asveldweg 11
7556 BT Hengelo (O)
The Netherlands
T +31 74 256 1010
F +31 74 291 0938

Siemensring 112
D47877 Willich
Germany
T +49 2154 499 660
F +49 2154 499 6313

30/36 Allee du Plateau
93250 Villemomble
France
T +331 48 122610
F +331 48 122619

6 Bracken Hill
South West Industrial Estate
Peterlee, Co Durham
SR82LS, United Kingdom
T +44 191 518 0020
F +44 191 518 0032

3 Furze Court
114 Wickham, Hampshire
Fareham, Hampshire
PO167SH, United Kingdom
T +44 132 984 8900
F +44 132 984 8901

### *Middle East & Africa*

2 Monteer Road, Isando
Kempton Park, 1600
South Africa
T +27 11 974 3336
F +27 11 974 7005

PO Box 17033
Jebel Ali Free Zone
Dubai,
United Arab Emirates
T +971 4883 5235
F +971 4883 5312

### *Asia Pacific*

19, Kian Teck Crecent,
Singapore 628885
T +65 6501 4600
F +65 6268 0028

9/F Gateway Building
No. 10 Ya Bao Road
Chaoyang District
Beijing, P.R. China
T +86 10 5821 1188
F +86 10 5821 1100

No 15 Xing Wang Road
Wuqing Development Area
Tianjin 301700
P.R. China
T +86 22 8212 3300
F +86 22 8212 3308

Lot 13112, Mukim Labu,
Kawasan Perindustrian Nilai
71807 Nilai, Negeri Sembilan
Malaysia
T +60 6 799 2323
F +60 6 799 9942

471 Mountain Highway
Bayswater, Victoria 3153
Australia
T +61 3 9721 0200
F +61 3 9720 0588

Delphi B-Wing, 601-602, 6th
Floor, Central Avenue,
Hiranandani Business Park,
Powai Mumbai-400093,
Maharashtra India
T +91 22 6694 2711
F +91 22 2825 3394

NOF Shinagawa Konan Building
1-2-5, Higashi-shinagawa
Shinagawa-Ku, Tokyo
140-0002 Japan
T +81 3 5769 6873
F +81 3 5769 6902


Please visit our website for up to date product data. www.shafervalve.com


All Rights Reserved
We reserve the right to modify or improve the designs or specifications of the products mentioned in this manual at any time without notice. Emerson Process Management does not assume responsibility for the selection, use or maintenance of any product. Responsibility for proper selection, use and maintenance of any Emerson Process Management product remains solely with the purchaser.
©2007 Emerson Electric Co.


Shafer™
www.ShaferValve.com

EMERSON.
Process Management