Automated Valve Packages

Leading Integrated Valve Automation Solutions
from the Region's Largest Supplier

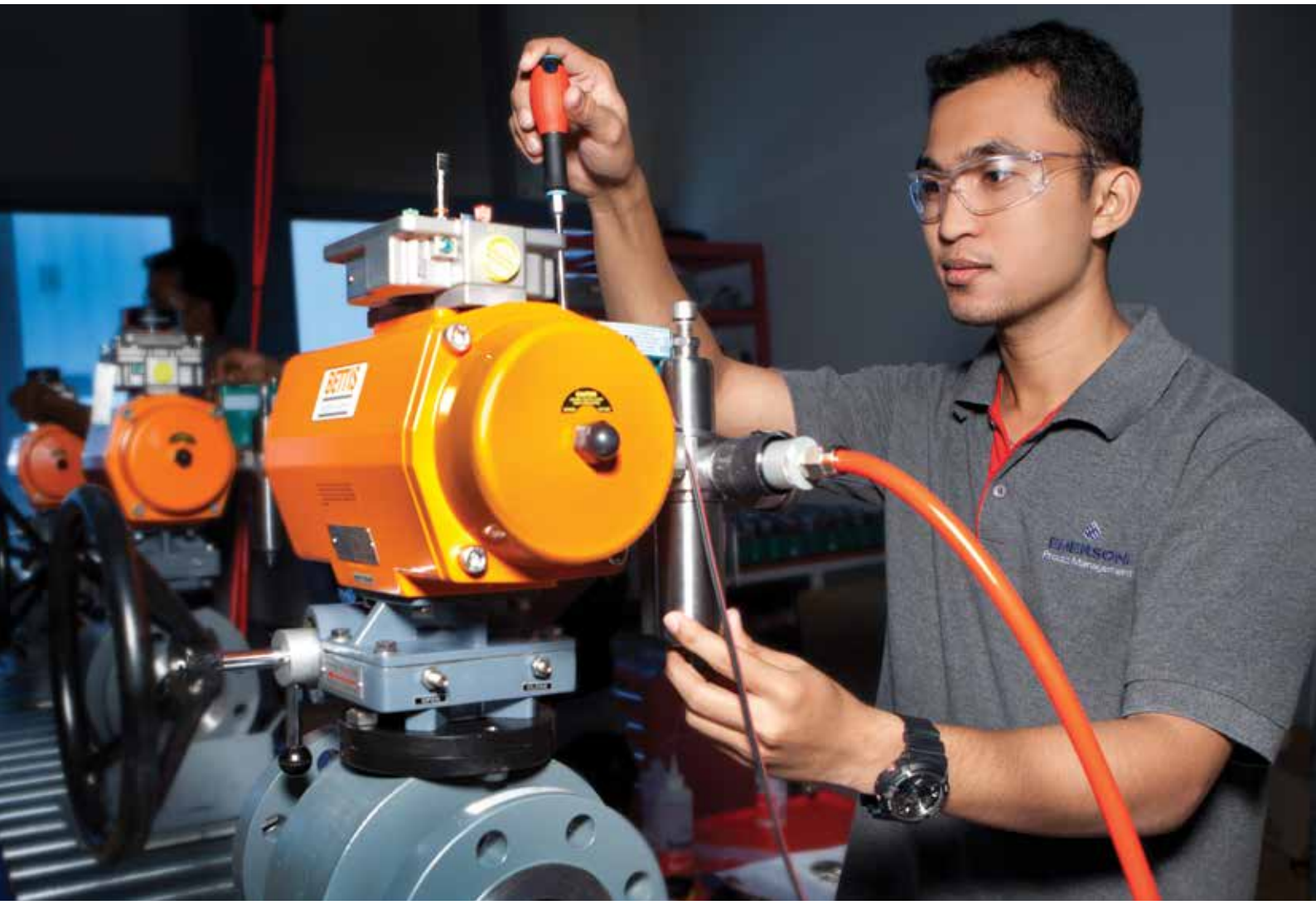

EMERSON
Process Management

Emerson's Valve Automation - Your Single Source in Middle East and Africa

- *Local facilities with exceptional capabilities*
- *Local expertise and service excellence*
- *Certified plant standardization and efficiency*
- *Largest on/off Valve Operating System portfolio*
- *Broad product offering from renowned brands*
- *Local parts availability and quick shipping*

Automated Valve Package

Emerson's Valve Automation business unit introduces Automated Valve Packages (AVP) for Industrial and Process On/Off applications.

Emerson is bringing together some of the premier brands in top automation such as EL-O-Matic™, ASCO and TopWorx to go along with a valve from a reputable manufacturer. Through our World Area Configuration Centers located in Dubai, U.A.E., Jubail, Saudi Arabia and Johannesburg, South Africa, we offer the best flow control solutions to a variety of industries such as Refining, Petrochemicals, Chemicals, Pharmaceuticals, Power, Food & Beverage, Pulp & Paper, Water & Waste Water and HVAC (Heating, Ventilating and Air Conditioning). Our extensive know-how in on/off valve solutions is available to our customers through a network of local business partners who help them to handle a request quickly and effectively and offer them with a single source solution in a **timely and economic manner.**

With its state-of-the-art assembling facilities in Middle East and Africa, Valve Automation assembles any quarter-turn rotary valve with its own branded actuators and top automation to provide a complete solution. A full-fledged inside sales, engineering, project management, logistics and after-sales team ensure a smooth execution of your complex requirements and projects.

We have engineering and integration professionals in our facilities with **extensive knowledge in automation and control as well as applications** in all upstream and downstream process industries. They are able to understand the unique need of our clients to create specific Automated Valve Packages that are fit for the purpose. We provide full **Factory Acceptance Testing (FAT), system testing and staging and integration of full wireless capability** for use in any facility. Emerson's renowned high quality assurance system is maintained in all operations and support will be provided throughout the **complete life-cycle of the product.**

Scope and Service Excellence

Scope of Supply

Valve

- Full Bore / Reduced Bore, SS/CS Ball Valves, ¼" through 8", 150#, 300#. Flanged or Screwed
- Wafer / Lug type Butterfly valves, SS/CS or DI/CI Lined, 2" through 14", 150# / 300#

Actuator

- Pneumatic Rack & Pinion Actuator – Spring Return or Double Acting
- Soft seated for general applications
- Other material / connection options for body and trim available on request
- ISO 5211 Direct Mounting Actuator – Space saving, cost efficient operation
- Open & closed adjustment stops
- Visual indicator

Accessories

- NAMUR mounted accessories
- Low Power ASCO solenoid valves
- Resin / Aluminum Limit Switch Top Box

Exceptional Local Service Capability

Emerson's World Area Configuration Centers (WACC) and local authorized service facilities differentiate us from everyone else. We have experienced technicians, modern facilities with cutting edge automation capabilities, high-quality standards and a strong dedication to serving our customers throughout the life-cycle of their valve automation packages. Our factory-trained and certified technicians deliver immediate assistance as needed and we offer long-term support contracts and service agreements.

Knowledgeable Field Service

Our large cadre of service engineers in the Middle East and Africa are knowledgeable about all aspects of valve automation and control. Additionally, they have been specifically trained and certified in all the intricacies of all Emerson brands. We also have many service engineers in house with a broad knowledge and experience of all major valve and actuator brands. This helps us to identify your retrofit requirements and assist you to provide the best solution for your automated valve applications. Our many years of industrial experience translates into the ability to provide valuable assistance with specification development, consulting regarding sizing and installation, expert after-sales service in the field by technicians who know how to diagnose, troubleshoot and solve problems are available 24/7.

Dimension and Torque Values

Ball Valves

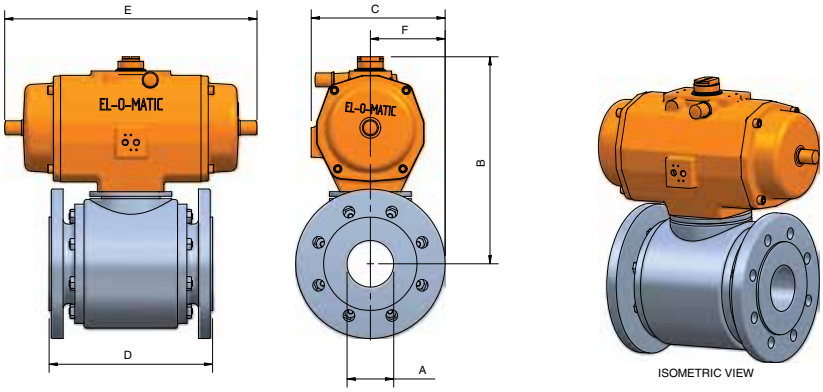

Single Acting - 150#

Size A	B	C	D	E	F	Valve Torque	Actuator Model	Weight
½”	165	83	108	172	46	26	ES25	4
1”	188	96	127	204	53	38	ES40	6
1 ½”	208	107	165	249	58	55	ES65	12
2”	253	107	182	249	58	92	ES200	20
3”	278	137	203	360	73	170	ES200	33
4”	336	182	229	387	95	273	ES350	56
6”	449	242	394	517	126	778	ES950	130
8”	520	275	457	142	142	1313	ES1600	221

- Other types, sizes and ratings available on request

Bill Of Materials - Ball Valves

No	Description	Materials*
1	Body	ASTM A 216 WCB/ ASTM A 351 CF8M
2	Ends	ASTM A 216 WCB/ ASTM A 351 CF8M
3	Ball	316SS
4	Seat	PTFE
5	Body Seal	PTFE
6	Stem	SS316
7	Thrust Washer	PTFE
8	Stem Packing	PTFE
9	Gland Nut	304SS
10	Packing Nut	304SS
11	Actuator Body	Aluminum
12	Actuator Internals	Die Cast Aluminum – Anodized
13	Solenoid Valve	Aluminum
14	Limit Switch Box	Engineered Resin

- Other materials available on request

Bill Of Materials - Butterfly Valves

No	Description	Materials*
1	Body	Ductile Iron
2	Disc	Ductile Iron
3	Liner	NBR Buna-N
4	Pins	SS
5	Stem	SS
6	Actuator Body	Aluminum
7	Actuator Internals	Die Cast Aluminum – Anodized
8	Solenoid Valve	Aluminum
9	Limit Switch Box	Engineered Resin

Out of the Box Wireless AVP Solution

TopWorx 4310
Wireless Limit Switch

ValveTop
with Wireless THUM

"Out of the Box" Solution

- Emerson's Smart Wireless Solutions and Wireless Automated Valve Packages in standard sizes and configurations are from one reliable source.
- "Out of the Box" Integrated Solution = Standard Valve Sizes + Actuator + TopWorx Bracket and Beacon + TopWorx Wireless Controller

Convenience and Confidence in a Single Source Provider

With our portfolio of valve automation products and strong global presence we are in the best position to provide a single source supplier from the valve to actuator, control box to integration for ease of installation and start up of the complete valve package. What if you could have a single reliable solution provider for the valve, actuator, mounting accessories, and wireless controller?

Benefits of Valve Automation "Out of the Box" Wireless Solution

Wireless Improves Worker Efficiency

- Less time attending to actuators means more time with other important tasks
- Wireless allows you to automate process startup, shutdown and switch over procedures

Wireless Improves Production Efficiency and Reduce Lost Batches

- Faster valve alignment means more time producing
- Closed loop control means no human error to prevent bad batches due to errors in the process
- Eliminate sources of process variability with automation of manually-operated steps.

Wireless Reduces Unwanted Emissions

- Automating manual valves reduce the chance of a manual valve being the root cause of an environmental spill
- Fill or transfer valves can be sources of excessive level, temperature and pressure processes that cause trips and downtime

Wireless Improves Worker Safety

- Wireless control reduces worker exposure to hazardous environments, inclement weather, and mistake-prone infrastructure like slippery ladders and stairs
- Reduced operating time will give your experienced workforce more time to train new workers and potentially reduce mistakes

Wireless Out of the Box Reduces Complexity

- Convenience and Confidence in a Single Source Provider
- Whether is it a Valve Operating System (Actuator, NAMUR Mounting Kit and Wireless Switch) or Automated Valve Package (Valve, Actuator, NAMUR Mounting Kit and Wireless Switch), no major modification or field work is required. No additional payment for bracket design modifications

Brands You Can Trust

Our actuator brands stand on their own for quality and proven service in the field. Whether you require pneumatic, electric, hydraulic or gas/hydraulic service, Emerson has the valve actuator and operating system to fit your requirements. In addition to our leading valve automation brands, our facilities have experience with Emerson's complementary control products – PlantWeb™, Fisher®, Rosemount®, TopWorx™, ASCO®, DeltaV™, Daniel™ and other trusted brands.

BETTIS™

Scotch-Yoke pneumatic and hydraulic actuators

EL-O-MATIC™

Rack and Pinion actuators

FieldQ

The single valve automation solution

HYTORK™

Rack and Pinion actuators

DANTORQUE™

Helical Spline actuators

EIM™

Electric actuators

SHAFER™

Rotary Vane actuators

Readily Available Parts

Emerson facilities in the Middle East and Africa, partnering with local authorized service facilities, have essential parts availability when and where you need it. We make it easy to fill MRO requirements and even fast turnaround OPEX investments. We anticipate customer needs and carry parts for all our valve automation brands, with stocked materials to serve unexpected shutdowns.

World Area Configuration Centers (WACC) offer sales support, service, inventory and commissioning to our global customers. Choose the WACC or sales office nearest you:

NORTH & SOUTH AMERICA

19200 Northwest Freeway
Houston, TX 77065
USA
T +1 281 477 4100
F +1 281 477 2809

Av. Hollingsworth,
325, Iporanga Sorocaba,
SP 18087-105
Brazil
T +55 15 3238 3788
F +55 15 3228 3300

ASIA PACIFIC

No. 9 Gul Road
#01-02 Singapore 629361
T +65 6501 4600
F +65 6268 0028

No. 1 Lai Yuan Road
Wuqing Development Area
Tianjin 301700
P. R. China
T +86 22 8212 3300
F +86 22 8212 3308

MIDDLE EAST & AFRICA

P. O. Box 17033
Dubai
United Arab Emirates
T +971 4 811 8100
F +971 4 886 5465

P. O. Box 10305
Jubail 31961
Saudi Arabia
T +966 3 340 8650
F +966 3 340 8790

24 Angus Crescent
Longmeadow Business Estate East
P.O. Box 6908; Greenstone;
1616 Modderfontein, Extension 5
South Africa
T +27 11 451 3700
F +27 11 451 3800

EUROPE

Asveldweg 11
7556 BR Hengelo (O)
The Netherlands
T +31 74 256 1010
F +31 74 291 0938

For complete list of sales and manufacturing sites, please visit
www.emersonprocess.com/valveautomationlocations
Or contact us at info.valveautomation@emerson.com

©2015 Emerson Process Management. All rights reserved.

The Emerson logo is a trademark and service mark of Emerson Electric Co. Bettis™, EIM™, EL-O-Matic™, FieldQ™, Shafer™, Dantorque™ and Hytork™ are marks of the Emerson Process Management family of companies. All other marks are property of their respective owners.

EMERSON™
Process Management

DOC.6P.AVP.A4 Rev C 10-15