Product Data Sheet
March 2016
GVO-CLP-DA.01.01.EN Rev. 0

Bettis GVO-C Series

GVO-CLP-DA Pneumatic Actuators

BETTIS™

EMERSON™
Process Management

Actuator Dimensions *(Single-Stage)*

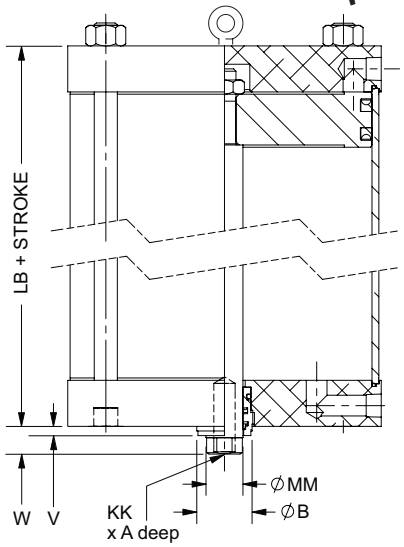

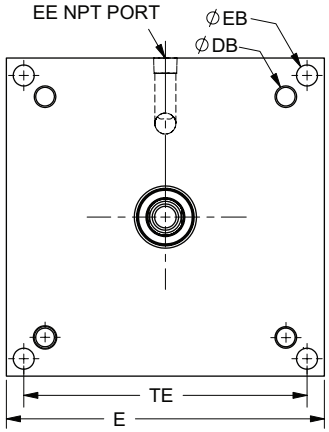

Flange Mounting Dimensions

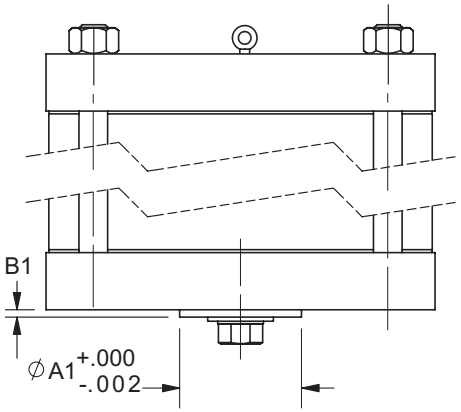

ISO AND MSS MOUNTING FLANGE

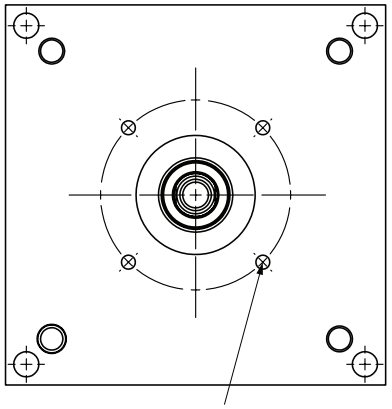

Actuator Dimensions (in)											Thrust Values (lbs)			ISO or MSS Mounting Pattern*	
BORE	A	B	E	EE NPT	KK UNF	LB	MM	TE	W	V	60 PSI	80 PSI	100 PSI	STD	OPT
4	1.75	1.50	4.50	¼	⅝-18	3.50	1.00	N/A	0.25	0.75	707	942	1,178	F/FA07	
5	1.75	1.50	5.50	¼	⅝-18	4.00	1.00	N/A	0.25	0.75	1,131	1,508	1,885	F/FA07	
6	1.75	1.50	6.50	¼	⅝-18	4.50	1.00	N/A	0.25	0.75	1,649	2,199	2,749	F/FA07	
7	1.75	1.50	7.50	⅜	⅝-18	4.00	1.00	N/A	0.25	0.75	2,262	3,016	3,770	F/FA07	
8	1.75	1.50	8.50	⅜	⅝-18	4.00	1.00	7.60	0.25	0.75	2,969	3,958	4,948	F/FA10	F/FA07
10	2.25	2.00	10.75	½	1-14	4.13	1.38	9.40	0.25	0.88	4,623	6,164	7,705	F/FA10	F/FA07
12	2.25	2.00	12.75	½	1-14	4.50	1.38	11.10	0.25	0.88	6,697	8,929	11,161	F/FA14	F/FA10
14	2.25	2.00	14.88	½	1-14	5.25	1.38	12.87	0.25	0.88	9,147	12,196	15,245	F/FA14	F/FA10
16	2.25	2.63	17.00	¾	1¼-12	5.75	2.00	14.85	0.25	1.13	11,875	15,834	19,792	F/FA14	F/FA10
18	2.25	2.63	19.00	¾	1¼-12	5.75	2.00	16.70	0.25	1.13	15,080	20,106	25,133	F/FA16	F/FA14
20	2.25	3.13	21.00	¾	1¼-12	6.50	2.50	18.40	0.25	1.13	18,555	24,740	30,925	F/FA16	F/FA14
22	2.25	3.75	23.00	¾	2¼-12	7.50	3.00	20.15	0.25	1.25	22,384	29,845	37,306	F/FA25	F/FA16
24	3.50	3.75	25.25	¾	2¼-12	8.50	3.00	21.75	0.25	1.25	26,719	35,626	44,532	F/FA25	F/FA16
26	3.50	4.25	27.50	¾	2¼-12	9.50	3.50	23.34	0.25	1.25	31,278	41,705	52,131	F/FA30	F/FA25

Consult factory for more detailed dimensions
**Other Mounting Patterns are available; consult factory*

MSS Flange Mounting Dimensions (in)							
MSS FLANGE	MAX.THRUST (lbs.)	A1	B1	C1	D1	E1	F1
FA07	4,500	2.10	0.12	4	5⁄16-18	11⁄16	2.75
FA10	9,000	2.30	0.12	4	⅜-16	11⁄16	4.00
FA14	25,000	3.75	0.16	4	⅝-11	13⁄16	5.50
FA16	35,000	5.00	0.19	4	¾-10	1⅛	6.50
FA25	50,000	6.00	0.19	8	⅝-11	1⅛	10.00
FA30	75,000	7.00	0.19	8	¾-10	1⅛	11.75
FA35	140,000	8.50	0.19	8	1-8	1¼	14.00
FA40	230,000	9.00	0.32	8	1¼-7	1½	16.00

ISO Flange Mounting Dimensions (mm)							
ISO FLANGE	MAX. THRUST (N)	A1	B1	C1	D1	E1	F1
F07	19,995	55	3	4	M8	11	70
F10	39,990	70	3	4	M10	16	102
F14	99,996	99	4	4	M16	19	140
F16	150,007	130	5	4	M20	22	165
F25	200,010	200	5	8	M16	22	254
F30	325,014	229	5	8	M20	22	297
F35	700,034	260	5	8	M30	22	356
F40	1,100,054	300	8	8	M36	22	406

Actuator Dimensions *(Large Bore Single-Stage)*

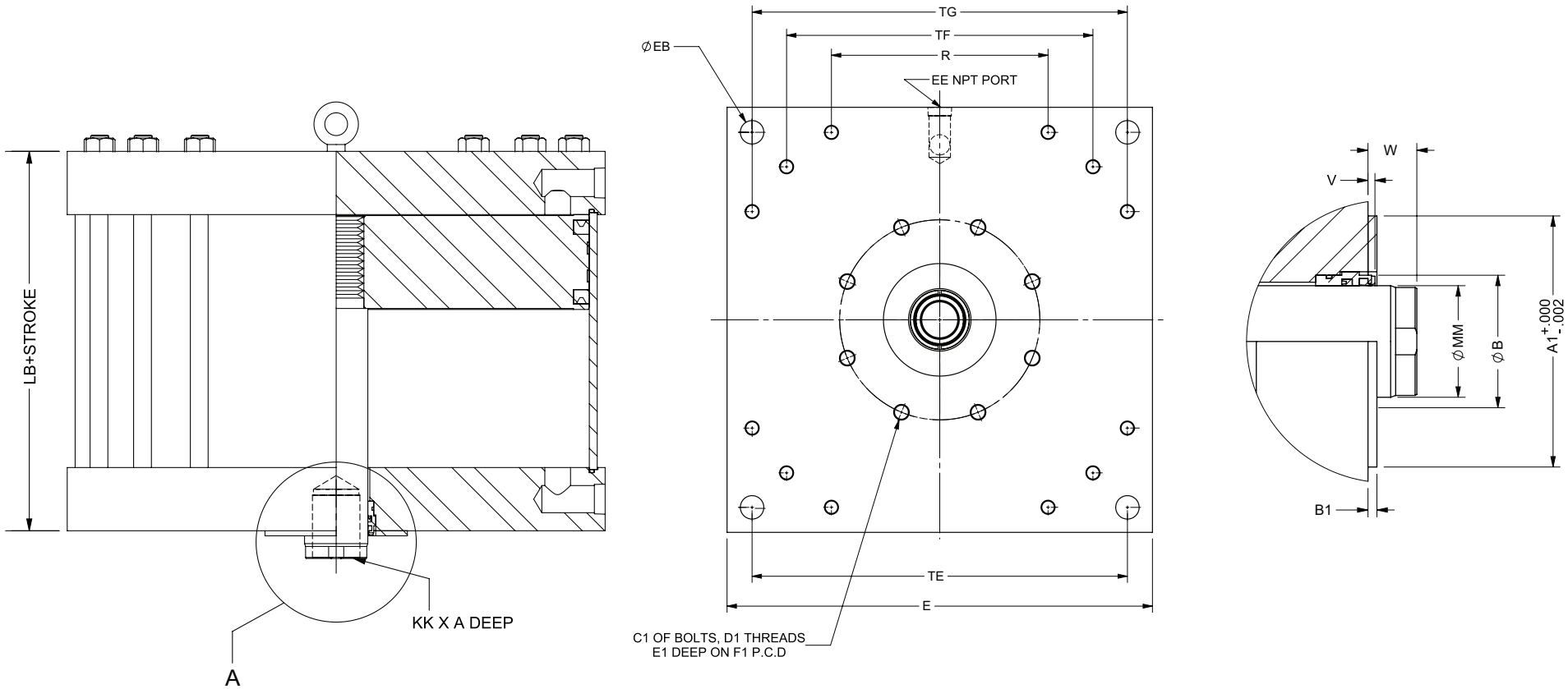

Actuator Dimensions (in)															Thrust Values (lbs)			ISO or MSS Mounting Pattern*	
BORE	**A**	**B**	**E**	**EB**	**EE**	**KK**	**LB+Stroke**	**MM**	**V**	**W**	**R**	**TE**	**TF**	**TG**	**60 PSI**	**80 PSI**	**100 PSI**	**STD**	**OPT**
28	3.50	4.25	31.25	1.56	¾	2 1/4-12UN	12.25	3.50	0.25	1.25	17.60	26.00	25.00	N/A	36,368	48,490	60,613	F/FA25	F/FA30
30	3.50	4.25	31.50	1.88	1 ½NP	2 1/4-12UN	12.25	3.50	0.25	1.50	18.70	26.70	26.70	N/A	41,834	55,779	69,724	F/FA25	F/FA30
32	3.50	4.75	34.00	1.88	1 ½NP	2 3/4-12UN	14.00	4.00	0.25	1.75	17.30	30.00	30.00	N/A	47,501	63,334	79,168	F/FA30	F/FA35
36	4.50	6.25	39.00	2.50	1 ½NP	4-12UN	20.00	5.50	0.25	1.75	13.30	33.00	27.60	36.60	59,647	79,529	99,412	F/FA30	F/FA35
42	4.50	6.25	45.00	2.50	1 ½NP	4-12UN	20.00	5.50	0.25	1.75	15.40	38.00	31.80	42.30	81,701	108,935	136,168	F/FA30	F/FA35

Consult factory for more detailed dimensions
**Other Mounting Patterns are available; consult factory*

Actuator Dimensions *(Tandem)*

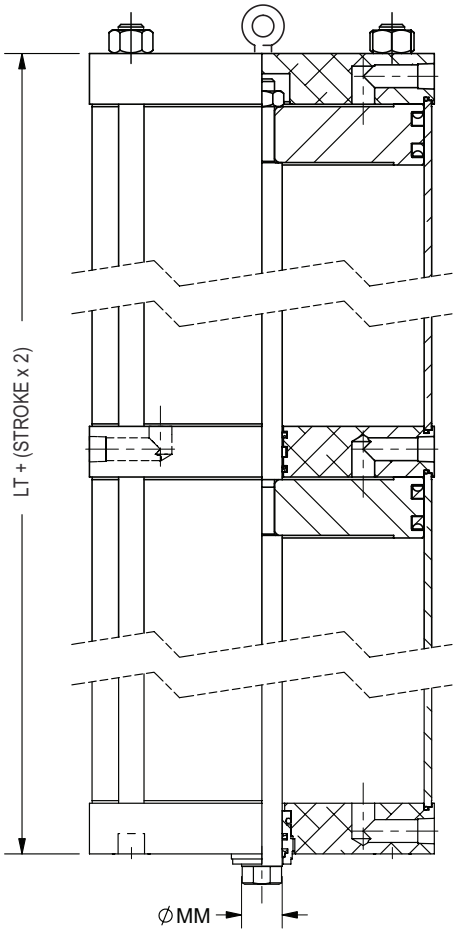

Actuator Dimensions (in)			Thrust Values (lbs)			ISO or MSS Mounting Pattern*	
BORE	LT	MM	60 PSI	80 PSI	100 PSI	STD	OPT
4	5.75	1.00	1,414	1,885	2,356	F/FA07	
5	6.50	1.00	2,262	3,016	3,770	F/FA07	
6	7.38	1.00	3,299	4,398	5,498	F/FA07	F/FA10
7	6.75	1.00	4,524	6,032	7,540	F/FA07	F/FA10
8	6.75	1.00	5,938	7,917	9,896	F/FA14	F/FA10
10	7.00	1.38	9,247	12,329	15,411	F/FA14	F/FA10
12	7.75	1.38	13,393	17,858	22,322	F/FA14	F/FA10
14	9.00	1.38	18,294	24,392	30,491	F/FA16	F/FA14
16	9.75	2.00	23,750	31,667	39,584	F/FA25	F/FA16
18	9.75	2.00	30,159	40,212	50,265	F/FA30	F/FA25
20	11.00	2.50	37,110	49,480	61,850	F/FA30	F/FA25
22	13.00	3.00	44,768	59,690	74,613	F/FA30	F/FA25
24	14.50	3.00	53,438	71,251	89,064	F/FA35	F/FA30
26	16.50	3.50	62,557	83,409	104,262	F/FA35	F/FA30
28	21.25	3.50	72,736	96,981	121,226	F/FA35	F/FA30
30	21.50	3.50	83,668	111,558	139,447	F/FA35	F/FA30
32	24.00	4.00	95,002	126,669	158,336	F/FA40	F/FA35
36	34.00	5.50	119,294	159,059	198,823	F/FA40	F/FA35
42	34.00	5.50	163,402	217,869	272,337	F/FA40	F/FA35

Refer to Single-stage Dimensions Tables for dimensions not shown
Consult factory for more detailed dimensions
** Other Mounting Patterns are available; consult factory*

Material Breakdown

Material Breakdown	Standard	Corrosion Resistant	AWWA
Head and Cap	Aluminum (4" to 6") and Steel (7" and above)	SS 316	Cad Plated
Barrel	Composite	Composite	Composite
Piston	Aluminum (4" to 8") and Steel (10" and above)	Steel	Cad Plated
Piston Rod	AISI 1045	SS 316	SS 316
Gland	SAE 660	Delrin	Delrin
Tie Rod 4" to 10"	AISI 1045	SS 316	SS 316
Tie Rod 12" and Above	AISI 1045	SS 17 - 4 PH	SS 17 - 4 PH

World Area Configuration Centers (WACC) offer sales support, service, inventory and commissioning to our global customers. Choose the WACC or sales office nearest you:

NORTH & SOUTH AMERICA

19200 Northwest Freeway
Houston, TX 77065
T +1 281 477 4100
F +1 281 477 2809

Av. Hollingsworth,
325, Iporanga Sorocaba,
SP 18087-105
Brazil
T +55 15 3238 3788
F +55 15 3228 3300

ASIA PACIFIC

No. 9 Gul Road
#01-02 Singapore 629361
T +65 6501 4600
F +65 6268 0028

No.1 Lai Yuan Road
Wuqing Development Area
Tianjin 301700
P.R.China
T +86 22 8212 3300
F +86 22 8212 3308

MIDDLE EAST & AFRICA

P. O. Box 17033
Dubai
United Arab Emirates
T +971 4 811 8100
F +971 4 886 5465

P. O. Box 10305
Jubail 31961
Saudi Arabia
T +966 3 340 8650
F +966 3 340 8790

24 Angus Crescent
Longmeadow Business Estate
East P.O. Box 6908; Greenstone;
1616 Modderfontein, Extension 5
South Africa
T +27 11 451 3700
F +27 11 451 3800

EUROPE

Berenyi u. 72- 100
Videoton Industry Park,
Building #230
Székesfehérvár 8000
Hungary
T +36 22 530 950
F +36 22 543 700

For complete list of sales and manufacturing sites, please visit
www.emersonprocess.com/valveautomationlocations
Or contact us at **info.valveautomationatemerson.com**

www.emersonprocess.com/bettis

©2016 Emerson Process Management. All rights reserved.

The Emerson logo is a trademark and service mark of Emerson Electric Co. Bettis is a mark of one of the Emerson Process Management family of companies. All other marks are property of their respective owners.

The contents of this publication are presented for information purposes only, and while every effort has been made to ensure their accuracy, they are not to be construed as warranties or guarantees, express or implied, regarding the products or services described herein or their use or applicability. All sales are governed by our terms and conditions, which are available on request. We reserve the right to modify or improve the designs or specifications of our products at any time without notice.

BETTIS™

EMERSON™
Process Management