ASCO™ Signaling Box

For series 290 and 390 valves

Series **890**

		See page	Function				Contact			Box			Actuator diameter compatibility (mm)				
			2-way		3-way												
			NC	NO	NC	NO	Mechanical contact	Inductive contact	Magnetic contact	Plastic cover	Aluminium cover	Stainless steel cover	32	50	63	90	125
Signaling box																	
	Signaling box with mechanical or inductive contacts.	3	●	●	●	●	●	●	–	●	●	–	–	●	●	●	●
	Signaling box, Ex ia NAMUR.	7	●	●	●	●	–	●	–	●	–	–	–	●	●	●	●
	Signaling box with mechanical or inductive contacts with LED	11	●	●	●	●	●	●	–	●	–	●	–	●	●	●	●
	Signaling box with integrated pilot	15	●	●	●	●	●	●	–	●	●	●	–	●	●	●	●
	Signaling box with pilot and ASi communication	21	●	●	●	●	●	●	–	●	●	●	–	●	●	●	●
Compact signaling unit																	
	Signaling unit for reed switch or magneto-resistive (MR) detectors	27	●	●	●	●	–	–	●	●	–	–	●	●	●	●	●

ASCO™ Signaling Box

With mechanical or inductive contacts , for series 290 and 390 valves

Series
890

Features and Benefits

- *The signaling box gives electrical feedback of the valve closed and open position*
- *The signaling box is supplied pre-installed and pre-adjusted on the valve. It can be delivered separately for on-site installation on any valve already in service*
- *The version with mechanical contacts can be used in magnetic field environments*
- *The signaling box can be used outdoors thanks to its UV resistance and degree of protection (IP66)*
- *Specification are laser marked to prevent from loss during cleaning process*
- *The 290-adaptation kit allows quick mounting on most of normally closed valves*

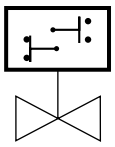

Operation

At both end-of-travel positions (open and closed) of the valve stem, cams on the signaling box plunger operate contacts which provide an electrical signal indicating that the end position is reached.

General

Ambient temperature range	
Mechanical contacts	-20°C to +80°C (-4°F to 176°F)
Inductive contacts (PNP/NPN)	-20°C to +70°C (-4°F to 158°F)
Degree of protection	IP66 (EN 60529)
Vibration	Max. 1 g (EN 60068-2-6)

Construction

Body	Glass fiber filled PA
Cover	PA (transparent) or aluminium
Valve adaptor	Brass or stainless steel
Stem and cams	Stainless steel and PEEK
Guiding and bearing	POM
Seals	NBR
Interface gasket	NBR
Cable gland	PA + NBR

Electrical characteristics

Function	ON-OFF	ON-OFF
Contact type	**Mechanical contacts**	**Inductive contacts (PNP/NPN)**
Voltage rating	24 V AC/DC	10 to 30 V DC
Wattage rating max.	-	0.95 W
Breaking capacity	0.5 A / max. 1 A	100 mA

Electrical connection	1 terminal block with 4 positions Grip, cross section stranded wire: Minimum 0.14 mm² (25 AWG) Maximum 2.5 mm² (14 AWG) Wire strip length 5 mm (0.2 in)
Cable entry	Cable gland M16x1.5 Cable 4 to 8 mm dia. / 0.16 to 0.31 in

Certifications and Approvals

- RoHS compliance
- Reach compliant
- SIL2 Capable - IEC 61508:2010

Options

- EN 161/EN 16678 compliant versions (see dedicated catalog pages)

Product selection guide

PRODUCT CODE

P 890 A T 1 0 0 1 A00 00

Product series
890 = Signaling units for air operated valves

Revision letter
A = Initial release

Enclosure type
T = Signaling box

Sensor type - Enclosure type
1 = Mechanical contact - Plastic cover
3 = Mechanical contact - Aluminium cover
4 = Inductive contact PNP - Plastic cover
6 = Inductive contact PNP - Aluminium cover
7 = Inductive contact NPN -Plastic cover
9 = Inductive contact NPN - Aluminium cover

Options
A00 = Without
EGA = EN 161 gas certified

Valve type

Valves with plastic actuator:
290 NC:
6 = Actuator 50 mm
2 = Actuator 63 mm
3 = Actuator 90 mm
5 = Actuator 125 mm

290 NO:
7 = Actuator 63 mm
8 = Actuator 90 mm
9 = Actuator 125 mm

390 NC:
2 = Actuator 63 mm
3 = Actuator 90 mm
5 = Actuator 125 mm

390 NO:
8 = Actuator 63 mm or 90 mm
9 = Actuator 125 mm

Valves with stainless steel actuator:
290 NC:
1 = Actuator 50 mm or 63 mm
4 = Actuator 90 mm

290 NO:
6 = Actuator 50 mm or 63 mm
7 = Actuator 90 mm

390 NC:
1 = Actuator 50 mm or 63 mm
4 = Actuator 90 mm

390 NO:
6 = Actuator 50 mm or 63 mm
7 = Actuator 90 mm

Electrical connection type
0 = Cable gland

ASCO™ Signaling Box

Installation

- The signaling box can be installed in any position
- Adjustable signaling box enables 360° access to cable gland
- Installation/maintenance instructions are included with each signaling box
- Electrical connexion:

Mechanical contacts

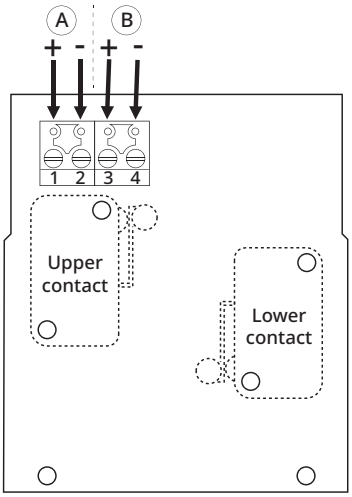

Inductive contacts (PNP/NPN)

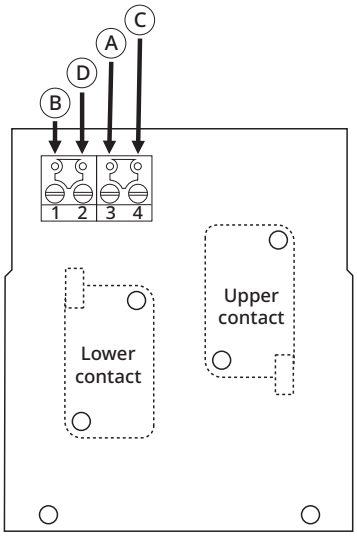

(A) Open valve signal
(B) Closed valve signal
(C) Ground
(D) Power

Dimensions mm (inches), **Weight** kg (Lbs)

Configurator - CAD Files

Angle seat valve - Plastic actuator (signaling box with PA or aluminium cover)

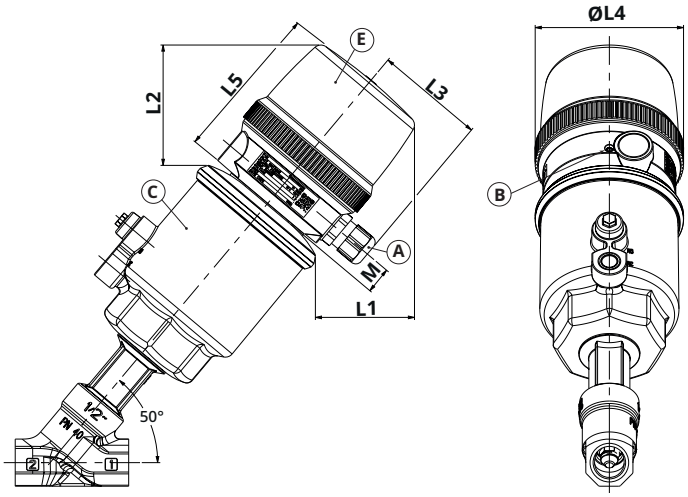

Weight (signaling box alone)	
0.350	kg
0.781	(Lbs)

(A) Cable gland
(B) Unit rotation lock set screw (orientable through 360°)
(C) For plastic actuators 50 mm (NC), 63 mm to 125 mm (NC/NO)
(E) PA cover

Actuator diameter		Signaling box mounted on plastic actuator										
		L1		L2		L3	ØL4		L5		M	
		(1)	(2)	(1)	(2)		(1)	(2)	(1)	(2)	(1)	(2)
50 mm	mm	60	72.5	71	84.5	59-63	85	82	93	105	15.2	15.2
	(in)	2.362	2.854	2.795	3.327	2.323-2.480	3.346	3.228	3.661	4.134	0.6	0.6
63 mm	mm	57	69	69	82	59-63	85	82	93	105	15.2	15.2
	(in)	2.244	2.717	2.717	3.228	2.323-2.480	3.346	3.228	3.661	4.134	0.6	0.6
90 mm	mm	46	58	61	74	59-63	85	82	93	105	15.2	15.2
	(in)	1.811	2.283	2.402	2.913	2.323-2.480	3.346	3.228	3.661	4.134	0.6	0.6
125 mm	mm	32	44.5	49.5	62.5	59-63	85	82	93	105	15.2	15.2
	(in)	1.260	1.752	1.949	2.461	2.323-2.480	3.346	3.228	3.661	4.134	0.6	0.6

(1) PA cover
(2) Aluminium cover

Angle seat valve - Stainless steel actuator (with PA or aluminium cover)

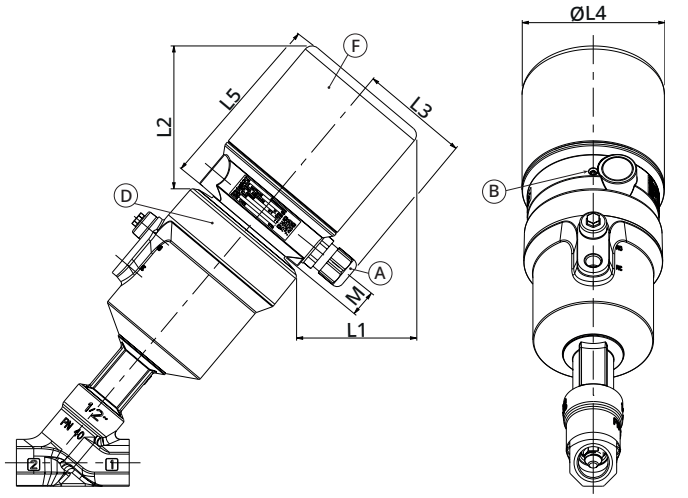

Weight (Signaling box alone)	
0.450	kg
1.01	(Lbs)

(A) Cable gland
(B) Unit rotation lock set screw (orientable through 360°)
(D) For stainless actuators 50 mm to 90 mm (NC/NO)
(F) Aluminium cover

Actuator diameter		Signaling box mounted on stainless steel actuator										
		L1		L2		L3	ØL4		L5		M	
		(1)	(2)	(1)	(2)		(1)	(2)	(1)	(2)	(1)	(2)
50 mm	mm	61.5	73.5	72.5	85.5	59-63	85	82	93	105	15.2	15.2
	(in)	2.421	2.894	2.854	3.366	2.323-2.480	3.346	3.228	3.661	4.134	0.6	0.6
63 mm	mm	57	69.5	69	82.5	59-63	85	82	93	105	15.2	15.2
	(in)	2.244	2.736	2.717	3.248	2.323-2.480	3.346	3.228	3.661	4.134	0.6	0.6
90 mm	mm	47.5	60	61.5	75	59-63	85	82	93	105	15.2	15.2
	(in)	1.870	2.362	2.421	2.953	2.323-2.480	3.346	3.228	3.661	4.134	0.6	0.6

(1) PA cover
(2) Aluminium cover

ASCO™ Signaling Box

IECEx ATEX ia NAMUR, for series 290 and 390 valves

Series
890

Features and Benefits

- *The signaling box gives electrical feedback of the valve closed and open position*
- *The signaling box is supplied installed and adjusted on the valve*
- *Specification are laser marked to prevent from loss during cleaning process*
- *Designed in accordance with ATEX Directive 2014/34/EU and EN/IEC 60079-0, EN/IEC60079-11 standards.*
- *Designed to be installed in potentially explosive atmospheres caused by gases, vapors or mists of groups II or III (category 1GD or 2GD) ATEX and IECEx CLASSIFICATION*
  II 1 G Ex ia IIC T6-T4 Ga
  II 1 D Ex ia IIIC T135°C Da
  EC type examination certificate no.: **LCIE 21 ATEX 3012X**
  IECEx Certificate of Conformity no.: **IECEx LCIE 21.0018X**
  UK type examination certificate no.: **CML 22UKEX1272X**

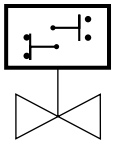

Operation

At both end-of-travel positions (open and closed) of the valve stem, cams on the signaling box plunger operate contacts which provide an electrical signal indicating that the end position is reached.

General

Ambient temperature range	-20°C to +80°C (-4°F to 176°F)
Degree of protection	IP66 (EN 60529)
Vibration	Max. 1 g (EN 60068-2-6)

Construction

Body	Glass fiber filled PA
Cover	PA, transparent
Valve adaptor	Brass or stainles steel
Stem and cams	Stainless steel and PEEK
Guiding and bearing	POM
Seals	NBR
Interface gasket	NBR
Cable gland	Polyamid + NBR

Electrical characteristics

Function	ON / OFF with 2 NAMUR intrinsic safety contacts
Contact type	Ex ia Namur Inductive contacts: Pepperl and Fuchs NJ2-V3-N
Characteristics	
Nominal voltage	8.2 V (Ri approx. 1 kΩ)
Hysteresis	0.01 ... 0.1 mm
Suitable for 2/1 technology	Yes, reverse polarity protection diode nor required
Current consumtion	Measuring plate not detected ≥ 3 mA Measuring plate detecte ≤ 1 mA
Electrical connection	2 terminal block with 2 positions Grip, cross section stranded wire: Minimum 0.14 mm² (25 AWG) Maximum 2.5 mm² (14 AWG) Wire strip length 5 mm (0.2 in)
Cable entry	Cable gland M16x1.5 Cable 7 to 8 mm dia. / 0.27 to 0.31 in

Recommended interfaces:
Galvanic separator:
- Pepperl & Fuchs Ref. KFA6-SR2-EX1.W
- MTL instruments Ref. MTL5511

ZENER barrier:
- MTL instruments Ref. MTL7742

Check that the interfaces used is adapted to the specified temperature and is compatible with the application.

Safety parameters of compatible interfaces (galvanic separators or ZENER barriers)

Type 1	Type 2	Type 3	Type 4
U_I = 16 V	U_I = 16 V	U_I = 16 V	U_I = 16 V
I_I = 25 mA	I_I = 25 mA	I_I = 52 mA	I_I = 76 mA
P_I = 34 mW	P_I = 64 mW	P_I = 169 mW	P_I = 242 mW
C_I = 40 nF	C_I = 40 nF	C_I = 40 nF	C_I = 40 nF
L_I = 50 µH	L_I = 50 µH	L_I = 50 µH	L_I = 50 µH

Max. ambient temperature (Ta), gas atmosphere and temperature class
II 1 G Ex ia IIC T6-T4 Ga or **II 2 G Ex ia IIC T6-T4 Gb**

Ta	Type 1	Type 2	Type 3	Type 4
40°C	T6	T6	T6	T5
50°C	T6	T6	T5	T4
60°C	T6	T6	T4	T4
70°C	T5	T5	T4	
80°C	T5	T4	T4	

Max. ambient temperature (Ta), dust atmosphere and max. surface temperature
II 1 D Ex ia IIIC T_{200}135°C Da

Ta	Type 1	Type 2	Type 3
70°C	T135°C	T135°C	T135°C
80°C	T135°C	T135°C	

Certifications and Approvals
- RoHS compliance
- IECEx, ATEX
- ATEX Directive 2014/34/EU and EN/IEC 60079-0, EN/IEC 60079-11
- EN161 only when mounted with proper 290 valve - see valve catalog pages
- SIL2 Capable - IEC 61508:2010

ASCO™ Signaling Box

Product selection guide

PRODUCT CODE

P 890 A T A 0 0 1 AT0 00

Product series
890 = Signaling units for air operated valves

Revision letter
A = Initial release

Enclosure type
T = Signaling box

Sensor type - Enclosure type
A = Inductive contact Ex ia NAMUR - Plastic cover

Electrical connection type
0 = Cable gland

Valve type

Valves with plastic actuator:
290 NC:
6 = Actuator 50 mm
2 = Actuator 63 mm
3 = Actuator 90 mm
5 = Actuator 125 mm

290 NO:
7 = Actuator 63 mm
8 = Actuator 90 mm
9 = Actuator 125 mm

390 NC:
2 = Actuator 63 mm
3 = Actuator 90 mm
5 = Actuator 125 mm

390 NO:
8 = Actuator 63 mm or 90 mm
9 = Actuator 125 mm

Valves with stainless steel actuator:
290 NC:
1 = Actuator 50 mm or 63 mm
4 = Actuator 90 mm

290 NO:
6 = Actuator 50 mm or 63 mm
7 = Actuator 90 mm

390 NC:
1 = Actuator 50 mm or 63 mm
4 = Actuator 90 mm

390 NO:
6 = Actuator 50 mm or 63 mm
7 = Actuator 90 mm

Options
AT0 = ATEX/IECEx 0/20 zones
126 = CUTR Certification (Ex 0/20 zones)
UK0 = UKCA Certification (Ex 0/20 zones)
UKG = UKCA Gas Certified (EN 161 and NF EN 16678)

Installation

- The signaling box can be installed in any position
- Adjustable signaling box enables 360° access to cable gland
- Installation/maintenance instructions are included with each signaling box
- Electrical connection:

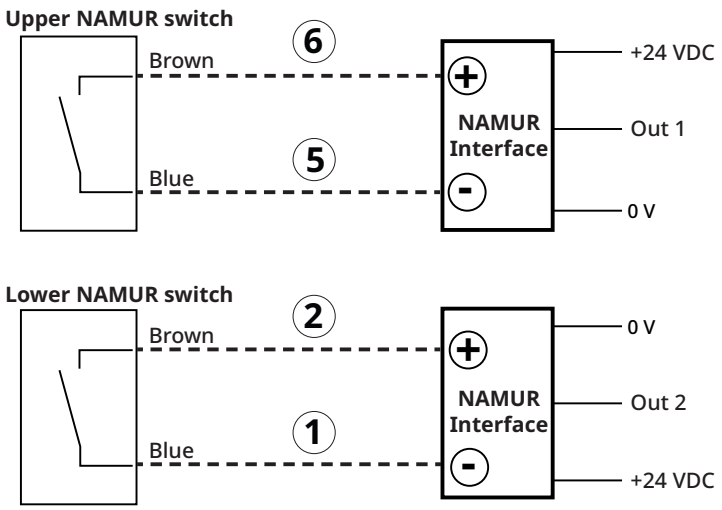

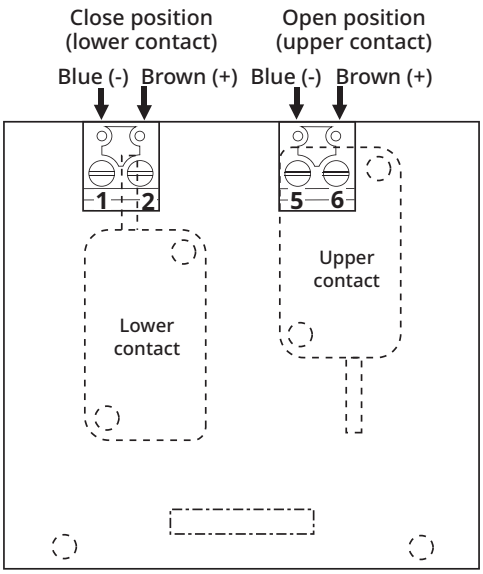

Dimensions mm (inches), **Weight** kg (Lbs)

Configurator - CAD Files

Angle seat valve - Plastic actuator (with PA cover)

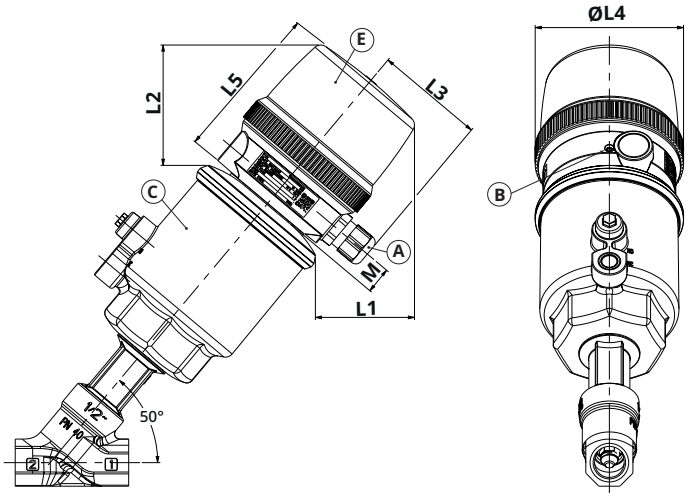

Weight (signaling box alone)	
0.350	kg
0.781	(Lbs)

(A) Cable gland
(B) Unit rotation lock set screw (orientable through 360°)
(C) For plastic actuators 50 mm (NC), 63 mm to 125 mm (NC/NO)
(E) PA cover

Actuator diameter		Signaling box mounted on plastic actuator					
		L1	L2	L3	ØL4	L5	M
50 mm	mm	60	71	59-63	85	93	15.2
	(in)	2.362	2.795	2.323-2.480	3.346	3.661	0.6
63 mm	mm	57	69	59-63	85	93	15.2
	(in)	2.244	2.717	2.323-2.480	3.346	3.661	0.6
90 mm	mm	46	61	59-63	85	93	15.2
	(in)	1.811	2.402	2.323-2.480	3.346	3.661	0.6
125 mm	mm	32	49.5	59-63	85	93	15.2
	(in)	1.260	1.949	2.323-2.480	3.346	3.661	0.6

Angle seat valve - Stainless steel actuator (with PA cover)

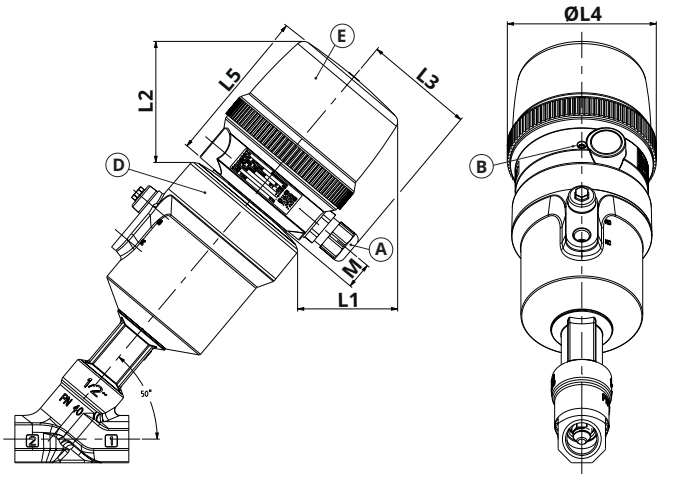

Weight (Signaling box alone)	
0.350	kg
0.781	(Lbs)

(A) Cable gland
(B) Unit rotation lock set screw (orientable through 360°)
(D) For stainless actuators 50 mm to 90 mm (NC/NO)
(E) PA cover

Actuator diameter		Signaling box mounted on stainless steel actuator					
		L1	L2	L3	ØL4	L5	M
50 mm	mm	61.5	72.5	59-63	85	93	15.2
	(in)	2.421	2.854	2.323-2.480	3.346	3.661	0.6
63 mm	mm	57	69	59-63	85	93	15.2
	(in)	2.244	2.717	2.323-2.480	3.346	3.661	0.6
90 mm	mm	47.5	61.5	59-63	85	93	15.2
	(in)	1.870	2.421	2.323-2.480	3.346	3.661	0.6

ASCO™ Signaling Box with Light Position Display

With mechanical or inductive contacts , for series 290 and 390 valves

Series **890**

Features and Benefits

- *The signaling box gives electrical feedback of the valve closed and open position*
- *The light position display, thanks to integrated LED and frosted top cover, gives an immediate visual status of the valve position with high light intensity*
- *The signaling box is supplied pre-installed and pre-adjusted on the valve. It can be delivered separately for on-site installation on any valve already in service*
- *The version with mechanical contacts can be used in magnetic field environments*
- *The 290-adaptation kit allows quick mounting on most of normally closed valves*
- *Specification are laser marked to prevent from loss during cleaning process*

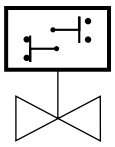

Operation

At both end-of-travel positions (open and closed) of the valve stem, cams on the signaling box plunger operate contacts which provide an electrical signal indicating that the end position is reached.

General

Ambient temperature range	
Mechanical contacts	-20°C to +80°C (-4°F to 176°F)
Inductive contacts (PNP/NPN)	-20°C to +70°C (-4°F to 158°F)
Degree of protection	IP66 (EN 60529) or IP69K (option)
Vibration	Max. 1 g (EN 60068-2-6)
LED status indication	LED yellow = Valve open position LED green = Valve close position

Construction

Body	Glass fiber filled PA
Cover	
Top cover	PA (transparent)
Side cover	Glass fiber filled PA or stainless steel
Valve adaptor	Brass or stainless steel
Stem and cams	Stainless steel and PEEK
Guiding and bearing	POM
Seals	NBR
Interface gasket	NBR
Cable gland	Polyamid + NBR

Electrical characteristics

Function	ON-OFF	ON-OFF
Contact type	**Mechanical contacts**	**Inductive contacts (PNP/NPN)**
Voltage rating	24 V DC	24 V DC
Wattage rating max.	0.35 W	1.3 W
Breaking capacity	0.5 A / max. 1 A	100 mA

Electrical connection	1 terminal block with 4 positions Grip, cross section stranded wire: Minimum 0.14 mm² (25 AWG) Maximum 2.5 mm² (14 AWG) Wire strip length 5 mm (0.2 in)
Cable entry	Cable gland M16x1.5 Cable 4 to 8 mm dia. / 0.16 to 0.31 in

Certifications and Approvals

- RoHS compliance
- Reach compliant
- SIL2 Capable - IEC 61508:2010

Options

- EN 161/EN 16678 compliant versions (see dedicated catalog pages)
- IP69K according to the standard ISO 20653 with stainless steel cover available for cleaning requirement using hot and high-pressure water jet

Product selection guide

PRODUCT CODE

P 890 A T 1 0 0 1 V11 00

Product series
890 = Signaling units for air operated valves

Revision letter
A = Initial release

Enclosure type
T = Signaling box

Sensor type - Enclosure type
1 = Mechanical contact - Plastic cover
2 = Mechanical contact - Stainless steel cover
4 = Inductive contact PNP - Plastic cover
5 = Inductive contact PNP - Stainless steel cover
7 = Inductive contact NPN -Plastic cover
8 = Inductive contact NPN - Stainless steel cover

Options
V11 = With light position display (LED)
EGA = EN 161 gas certified
P69 = IP69K (stainless steel cover)

Valve type

Valves with plastic actuator:
290 NC:
6 = Actuator 50 mm
2 = Actuator 63 mm
3 = Actuator 90 mm
5 = Actuator 125 mm

290 NO:
7 = Actuator 63 mm
8 = Actuator 90 mm
9 = Actuator 125 mm

390 NC:
2 = Actuator 63 mm
3 = Actuator 90 mm
5 = Actuator 125 mm

390 NO:
8 = Actuator 63 mm or 90 mm
9 = Actuator 125 mm

Valves with stainless steel actuator:
290 NC:
1 = Actuator 50 mm or 63 mm
4 = Actuator 90 mm

290 NO:
6 = Actuator 50 mm or 63 mm
7 = Actuator 90 mm

390 NC:
1 = Actuator 50 mm or 63 mm
4 = Actuator 90 mm

390 NO:
6 = Actuator 50 mm or 63 mm
7 = Actuator 90 mm

Electrical connection type
0 = Cable gland

ASCO™ Signaling Box

Installation

- The signaling box can be installed in any position
- Adjustable signaling box enables 360° access to cable gland
- Installation/maintenance instructions are included with each signaling box
- Electrical connexion:

Mechanical contacts

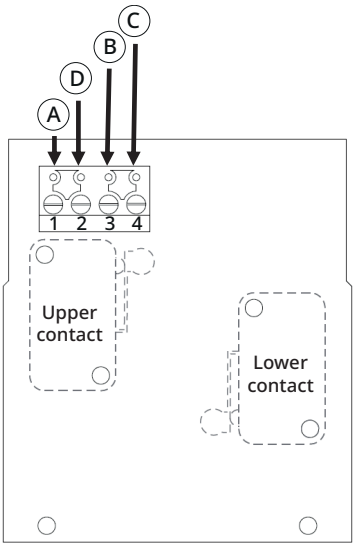

Inductive contacts (PNP/NPN)

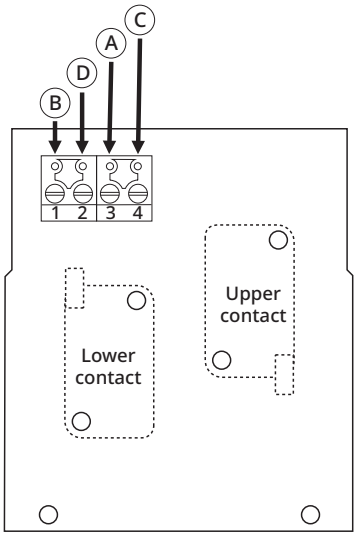

(A) Open valve signal (upper contact)
(B) Closed valve signal (lower contact)
(C) Ground (0 V)
(D) Power (24 V)

Dimensions mm (inches), **Weight** kg (Lbs)

Configurator - CAD Files

Angle seat valve - Plastic actuator (with PA or stainless steel side cover)

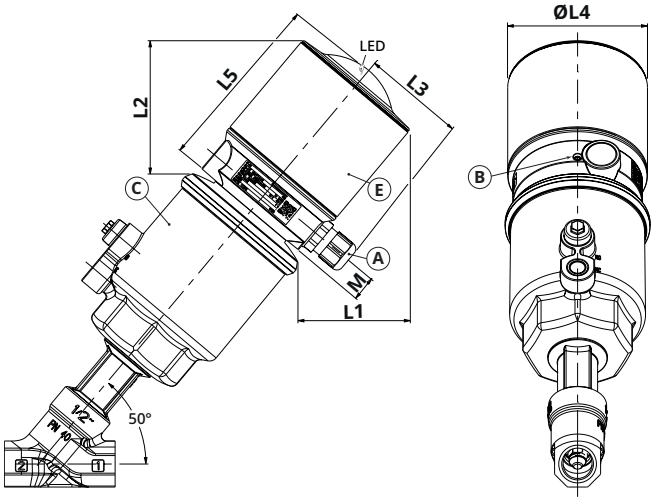

Weight (PA signaling box alone)	
0.400	kg
0.881	(Lbs)

- (A) Cable gland
- (B) Unit rotation lock set screw (orientable through 360°)
- (C) For plastic actuators 50 mm (NC), 63 mm to 125 mm (NC/NO)
- (E) PA cover

Actuator diameter		L1	L2	L3		ØL4	L5	M
				IP66	IP69K [1]			
50 mm	mm	69	80	59-63	82-87	82	108.5	15.2
	(in)	2.717	3.150	2.323-2.480	3.228-3.425	3.228	4.272	0.6
63 mm	mm	66	78	59-63	82-87	82	108.5	15.2
	(in)	2.598	3.071	2.323-2.480	3.228-3.425	3.228	4.272	0.6
90 mm	mm	55	70	59-63	82-87	82	108.5	15.2
	(in)	2.165	2.756	2.323-2.480	3.228-3.425	3.328	4.272	0.6
125 mm	mm	41	58.5	59-63	82-87	82	108.5	15.2
	(in)	1.614	2.303	2.323-2.480	3.228-3.425	3.328	4.272	0.6

[1] Stainless steel tube only.

Angle seat valve - Stainless steel actuator (with PA or stainless steel cover)

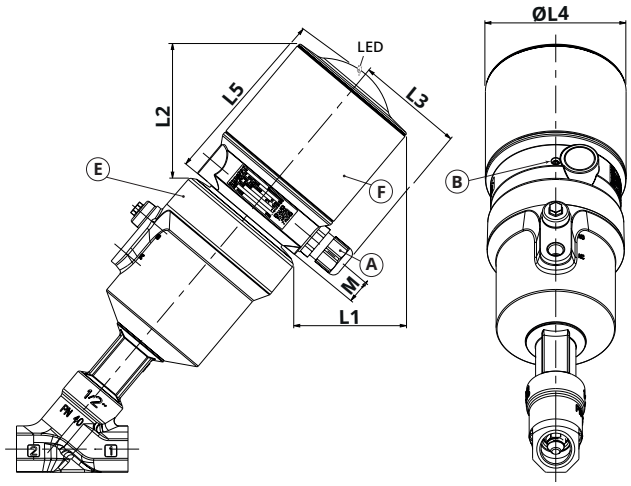

Weight (Stainless steel signaling box alone)	
0.600	kg
1.321	(Lbs)

- (A) Cable gland
- (B) Unit rotation lock set screw (orientable through 360°)
- (D) For stainless actuators 50 mm to 90 mm (NC/NO)
- (F) Stainless steel cover

Actuator diameter		L1	L2	L3		ØL4	L5	M
				IP66	IP69K [1]			
50 mm	mm	70.5	81.5	59-63	82-87	82	108.5	15.2
	(in)	2.776	3.209	2.323-2.480	3.228-3.425	3.228	4.272	0.6
63 mm	mm	66	78.5	59-63	82-87	82	108.5	15.2
	(in)	2.598	3.091	2.323-2.480	3.228-3.425	3.228	4.272	0.6
90 mm	mm	56.5	70.5	59-63	82-87	82	108.5	15.2
	(in)	2.224	2.776	2.323-2.480	3.228-3.425	3.228	4.272	0.6

[1] Stainless steel tube only.

ASCO™ Signaling Box with Integrated Pilot

With mechanical or inductive contacts , for series 290 and 390 valves

Series **890**

Features and Benefits

- *A choice of 3 types of proven pilot valves are integrated inside the enclosure to allow a compact and solid assembly*
- *Pilot allows fail close piloting of the valve in case of de-energizing or depressurizing*
- *Pilot selection enables various combinations of temperature range, operating pressure and response time*
- *The signaling box is supplied pre-installed and pre-adjusted on the valve. It can be delivered separately for on-site installation on any valve already in service*
- *The light position display is available with the frosted top cover. Integrated LED gives an immediate visual status of the valve position with high light intensity*
- *The 290-adaptation kit allow quick mounting on most of normally closed valves*
- *Specification are laser marked to prevent from loss during cleaning process*
- *Non condensing system option avoids moisture*

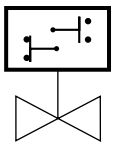

Operation

At both end-of-travel positions (open and closed) of the valve stem, cams on the signaling box plunger operate contacts which provide an electrical signal indicating that the end position is reached.
Integrated LED are directly connected to contacts status and give visual indication of valve position.
Integrated pilot valve is operated to control the valve position.

General

	Pilot 302	Pilot 518
Ambient temperature range	-20°C to +50°C (-4°F to 122°F)	+0°C to 50°C (32°F to 122°F)
Max. pilot pressure	See page **20**	See page **20**
Degree of protection	IP66 (EN 60529) or IP69K (option)	
Vibration	Max. 1 g (EN 60068-2-6)	
LED status indication	LED yellow = Valve open position LED green = Valve close position	

Construction

Body	Glass fiber filled PA
Cover (with LED)	
Top cover	PA (transparent)
Side cover	Glass fiber filled PA or stainless steel
Cover (without LED)	Aluminium
Valve adaptor	Brass or stainless steel
Stem and cams	Stainless steel and PEEK
Guiding and bearing	POM
Seals	NBR
Interface gasket	NBR
Cable gland	Polyamid + NBR
IP69K option	Stainless steel + silicon or NBR

Electrical characteristics

Function	ON-OFF and piloting valve	ON-OFF and piloting valve
Contact type	**Mechanical contacts**	**Inductive contacts (PNP/NPN)**
Voltage rating	24 V DC	24 V DC
Wattage rating max.		
Pilot 302	3 W	3.95 W
Pilot 518	1.35 W	2.30 W
Breaking capacity	0.5 A / max. 1 A	100 mA
Electrical connection	1 terminal block with 4 positions and 1 terminal block with 2 positions for piloting Grip, cross section stranded wire: Minimum 0.14 mm² (25 AWG) Maximum 2.5 mm² (14 AWG) Wire strip length 5 mm (0.2 in)	
Cable entry	Cable gland M16x1.5 Cable 4 to 8 mm dia. / 0.16 to 0.31 in	
IP69K (option)	Cable 6 to 10 mm dia. / 0.24 to 0.39 in	

Certifications and Approvals

- RoHS compliance
- Reach compliant

Options

- IP69K according to the standard ISO 20653 with stainless steel cover available for cleaning requirement using hot and high-pressure water jet.
- NCS (Non condensing system): Gives a permanent internal air leakage to avoid moisture inside the enclosure

Product selection guide

PRODUCT CODE

G 890 A T 1 0 0 1 V11 F1

Piloting connection type
G = ISO 228/1
8 = NPT (ANSI B1.20.1)

Product series
890 = Signaling units for air operated valves

Revision letter
A = Initial release

Enclosure type
T = Signaling box

Sensor type - Enclosure type
1 = Mechanical switch - Plastic cover
2 = Mechanical switch - Stainless steel cover
3 = Mechanical switch - Aluminium cover
4 = Inductive switch PNP - Plastic cover
5 = Inductive switch PNP - Stainless steel cover
6 = Inductive switch PNP - Aluminium cover
7 = Inductive switch NPN -Plastic cover
8 = Inductive switch NPN - Stainless steel cover
9 = Inductive switch NPN - Aluminium cover

Pilot type
S = 302 pilot - Standard (orifice size 1.5)
P = 302 pilot - High pressure (orifice size 1.1)
F = 518 spool valve - High flow

Piloting voltage
F1 = 24 VDC (class F)

Options
A00 = Without light position display (Aluminium cover)
V11 = With light position display (LED) [PA and stainless steel covers]
NC1 = Non condensing system with light position display
P69 = IP69K with light position display (stainless steel cover)

Valve type

Valves with plastic actuator:
290 NC:
6 = Actuator 50 mm
2 = Actuator 63 mm
3 = Actuator 90 mm
5 = Actuator 125 mm

290 NO:
7 = Actuator 63 mm
8 = Actuator 90 mm
9 = Actuator 125 mm

390 NC:
2 = Actuator 63 mm
3 = Actuator 90 mm
5 = Actuator 125 mm

390 NO:
8 = Actuator 63 mm or 90 mm
9 = Actuator 125 mm

Valves with stainless steel actuator:
290 NC:
1 = Actuator 50 mm or 63 mm
4 = Actuator 90 mm

290 NO:
6 = Actuator 50 mm or 63 mm
7 = Actuator 90 mm

390 NC:
1 = Actuator 50 mm or 63 mm
4 = Actuator 90 mm

390 NO:
6 = Actuator 50 mm or 63 mm
7 = Actuator 90 mm

Electrical connection type
0 = Cable gland

ASCO™ Signaling Box

Installation

- The signaling box can be installed in any position
- Adjustable signaling box enables 360° access to cable gland
- Installation/maintenance instructions are included with each signaling box
- Electrical connexion:

Mechanical contacts with LED and pilot

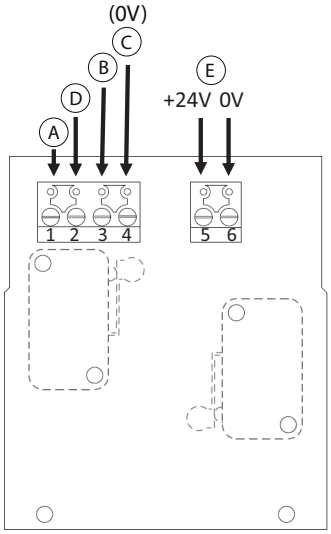

Inductive contacts with pilot (PNP/NPN)

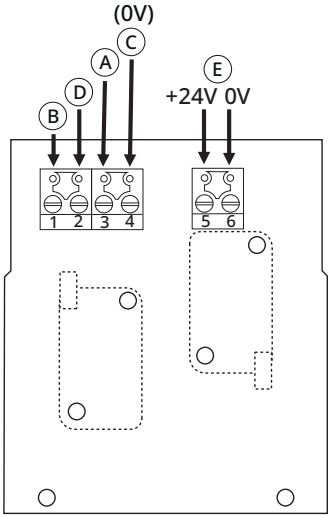

(A) Open valve signal (upper contact)
(B) Closed valve signal (lower contact)
(C) Ground (0 V)
(D) Power (+24 V)
(E) Piloting valve

Dimensions mm (inches), **Weight** kg (Lbs)

Configurator - CAD Files

Angle seat valve - Plastic actuator (with PA or stainless steel side cover)

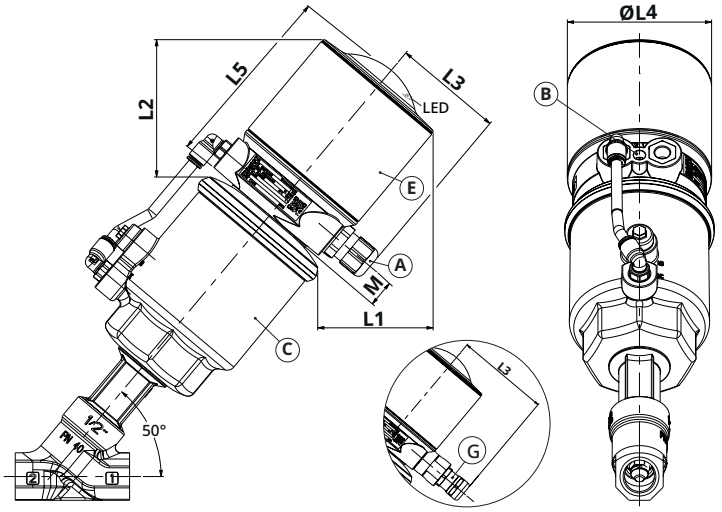

Weight (Signaling box alone)			
PA	Stainless steel	Stainless steel (IP69K)	
0.480	0.680	0.760	kg
1.06	1.5	1.67	(Lbs)

- (A) Cable gland (IP66)
- (B) Unit rotation lock set screw (orientable through 360°)
- (C) For plastic actuators 50 mm (NC), 63 mm to 125 mm (NC/NO)
- (E) PA cover
- (G) IP69K version (63 mm to 125 mm actuators only)

Actuator diameter		L1	L2	L3		ØL4	L5	M
				IP66	IP69K [1]			
50 mm	mm	69	80	59-63	82-87	82	108.5	15.2
	(in)	2.717	3.150	2.323-2.480	3.228-3.425	3.228	4.272	0.6
63 mm	mm	66	78	59-63	82-87	82	108.5	15.2
	(in)	2.598	3.071	2.323-2.480	3.228-3.425	3.228	4.272	0.6
90 mm	mm	55	70	59-63	82-87	82	108.5	15.2
	(in)	2.165	2.756	2.323-2.480	3.228-3.425	3.328	4.272	0.6
125 mm	mm	41	58.5	59-63	82-87	82	108.5	15.2
	(in)	1.614	2.303	2.323-2.480	3.228-3.425	3.328	4.272	0.6

[1] Stainless steel tube only.

Angle seat valve - Plastic actuator (with aluminium cover)

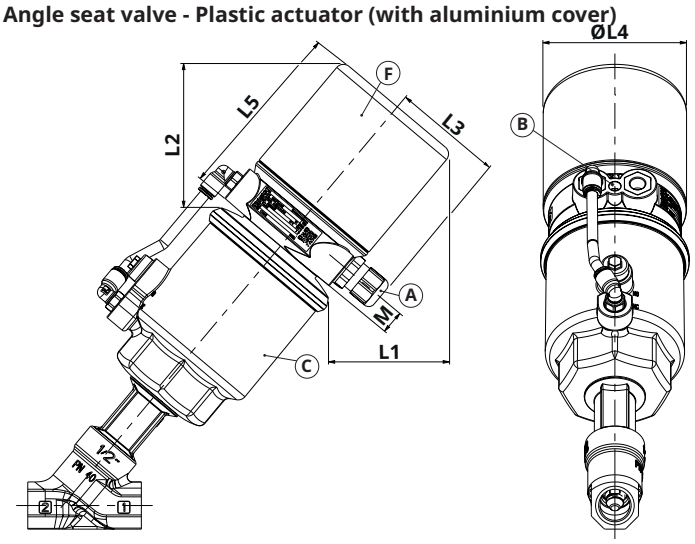

Weight (Signaling box alone)	
Aluminium	
0.540	kg
1.19	(Lbs)

- (A) Cable gland (IP66)
- (B) Unit rotation lock set screw (orientable through 360°)
- (C) For plastic actuators 50 mm (NC), 63 mm to 125 mm (NC/NO)
- (F) Aluminium cover

Actuator diameter		L1	L2	L3	ØL4	L5	M
50 mm	mm	72.5	84.5	59-63	82	105	15.2
	(in)	2.854	3.327	2.323-2.480	3.328	4.134	0.6
63 mm	mm	69	82	59-63	82	105	15.2
	(in)	2.717	3.228	2.323-2.480	3.328	4.134	0.6
90 mm	mm	58	74	59-63	82	105	15.2
	(in)	2.283	2.913	2.323-2.480	3.328	4.134	0.6
125 mm	mm	44.5	62.5	59-63	82	105	15.2
	(in)	1.752	2.481	2.323-2.480	3.328	4.134	0.6

ASCO™ Signaling Box

Dimensions mm (inches), **Weight** kg (Lbs)

Configurator - CAD Files

Angle seat valve - Stainless steel actuator (with PA or stainless steel cover)

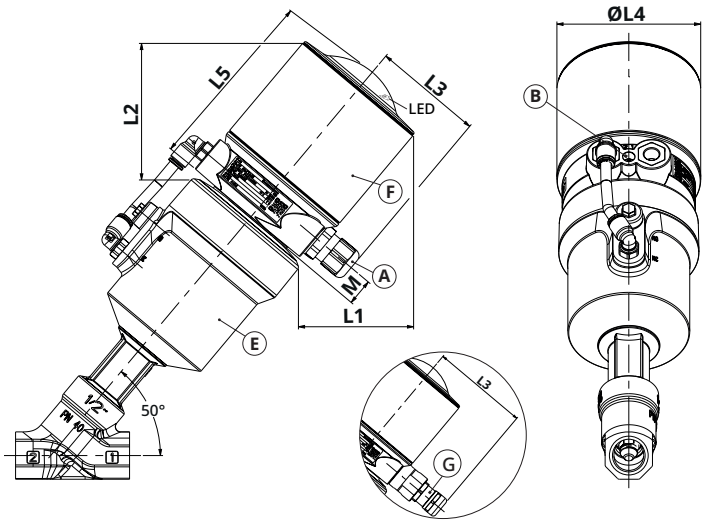

Weight (Signaling box alone)			
PA	Stainless steel	Stainless steel (IP69K)	
0.480	0.680	0.760	kg
1.06	1.5	1.67	(Lbs)

- (A) Cable gland (IP66)
- (B) Unit rotation lock set screw (orientable through 360°)
- (D) For stainless actuators 50 mm to 90 mm (NC/NO)
- (F) Stainless steel cover
- (G) IP69K version

Actuator diameter		L1	L2	L3		ØL4	L5	M
				IP66	IP69K and NC [1]			
50 mm	mm	70.5	81.5	59-63	82-87	82	108.5	15.2
	(in)	2.776	3.209	2.323-2.480	3.228-3.425	3.228	4.272	0.6
63 mm	mm	66	78.5	59-63	82-87	82	108.5	15.2
	(in)	2.598	3.091	2.323-2.480	3.228-3.425	3.228	4.272	0.6
90 mm	mm	56.5	70.5	59-63	82-87	82	108.5	15.2
	(in)	2.224	2.776	2.323-2.480	3.228-3.425	3.228	4.272	0.6

[1] Stainless steel tube only.

Angle seat valve - Stainless steel actuator (with aluminium cover)

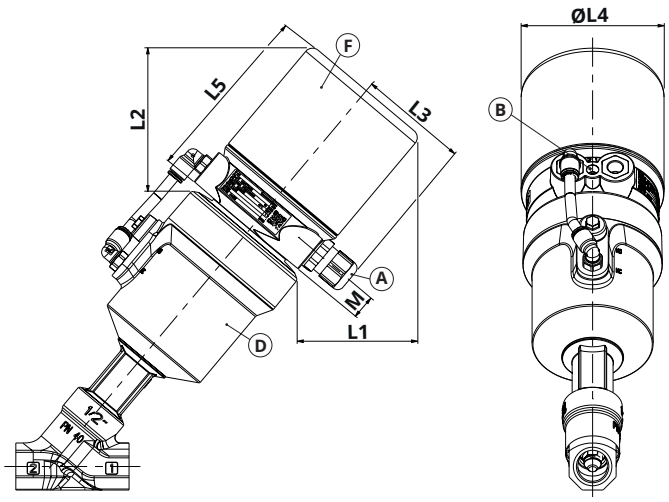

Weight (Signaling box alone)	
Aluminium	
0.540	kg
1.19	(Lbs)

- (A) Cable gland (IP66)
- (B) Unit rotation lock set screw (orientable through 360°)
- (D) For stainless actuators 50 mm to 90 mm (NC/NO)
- (F) Aluminium cover

Actuator diameter		L1	L2	L3	ØL4	L5	M
50 mm	mm	73.5	85.5	59-63	82	105	15.2
	(in)	2.894	3.366	2.323-2.480	3.328	4.134	0.6
63 mm	mm	69.5	82.5	59-63	82	105	15.2
	(in)	2.736	3.248	2.323-2.480	3.328	4.134	0.6
90 mm	mm	60	75	59-63	82	105	15.2
	(in)	2.362	2.953	2.323-2.480	3.328	4.134	0.6

Pilot 302 - Selection guide

NC

Features and Benefits

- *Micro solenoid pilot valve*
- *General purpose applications*
- *Large temperature range*

Materials of components in contact with fluid

(∗) Ensure that compatibility of materials in contact with fluids is verified.

Body	PARA
Internal parts	POM, PET, stainless steel and brass
Seals	NBR (disc), FPM (others)
Pneumatic interface seal	TPE

Specifications

Fluids (∗)	Air or inert gas, filtered at 25 µm, lubricated or not
Operating pressure differential	Standard version (orifice 1.5 mm): 6 bar (90 psi) High pressure version (orifice 1.1 mm): 10 bar (150 psi)

Pilot 302 (Pilot pressure = 6 bar)		**RESPONSE TIMES FOR INFORMATION** Signaling BOX + 290D VALVE SERIES (NC BELOW DISC) (Internal valve pressure response time. Response time of contact may vary upon setting precision) 290D valves actuator size (mm)				
		50 (all)	63 (DN10 and DN15)	63 (DN25 to 50)	90 (all)	125 (all)
Opening time (ms)	302, 1.1 dia.	160	160	270	480	1280
	302, 1.5 dia.	130	130	210	390	1000
Closing time (ms)	302, 1.1 dia.	280	350	520	1040	4580
	302, 1.5 dia.	370	590	610	1240	5620

Pilot 518 - Selection guide

NC

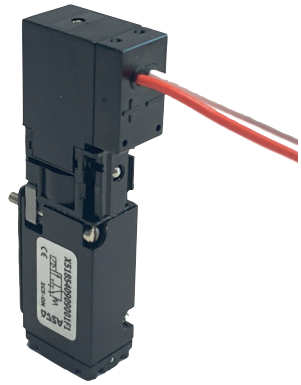

Features and Benefits

- *Micro spool valve*
- *High response time*

Materials of components in contact with fluid

(∗) Ensure that compatibility of materials in contact with fluids is verified.

Body	Light alloy, PA (polyamide)
Internal parts	Light alloy, brass, stainless steel
Seals	NBR
Pneumatic interface seal	FPM

Specifications

Fluids (∗)	Air or inert gas, filtered at 25 µm, non-lubricated
Operating pressure differential	8 bar (120 psi)

Pilot 518 (Pilot pressure = 6 bar)	**RESPONSE TIMES FOR INFORMATION** Signaling BOX + 290D VALVE SERIES (NC BELOW DISC) (Internal valve pressure response time. Response time of contact may vary upon setting precision) 290D valves actuator size (mm)				
	50 (all)	63 (DN10 and DN15)	63 (DN25 to 50)	90 (all)	125 (all)
Opening time (ms)	60	60	90	160	430
Closing time (ms)	150	230	260	590	1520

ASCO™ Signaling Box with Pilot and ASi Communication

With mechanical or inductive contacts , for series 290 and 390 valves

Series **890**

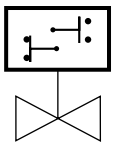

Features and Benefits

- *ASi communication protocol allow easy electrical installation using M12 connector*
- *Feedback data from contact of the valve closed and open position, and piloting valve status is communicated through the ASi bus cable*
- *A choice of 3 types of proven pilot valves from Emerson are integrated inside the enclosure to allow a compact and solid assembly*
- *Pilot allows fail close piloting of the valve in case of de-energizing or depressurizing*
- *Pilot selection enables various combinations of temperature range, operating pressure and response time*
- *The signaling box is supplied pre-installed and pre-adjusted on the valve. It can be delivered separately for on-site installation on any valve already in service*
- *The 290-adaptation kit allows quick mounting on most of normally closed valves*
- *Specification are laser marked to prevent from loss during cleaning process*
- *The light position display is available with the frosted top cover. Integrated LED gives an immediate visual status of the valve position with high light intensity*
- *Non condensing system option avoids moisture*

Operation

At both end-of-travel positions (open and closed) of the valve stem, cams on the signaling box plunger operate contacts which provide an electrical signal indicating that the end position is reached.
Integrated LED are directly connected to contacts status and give visual indication of valve position.
Integrated pilot valve is operated to control the valve position.
Fieldbus AS interface communication allow easy control of the pilot valve and position feedback data.

General

	Pilot 302	Pilot 518
Ambient temperature range	-20°C to +50°C (-4°F to 122°F)	+0°C to 50°C (32°F to 122°F)
Max. pilot pressure	See page **20**	See page **20**
Degree of protection	IP66 (EN 60529) or IP69K (option)	
Vibration	Max. 1 g (EN 60068-2-6)	
LED status indication	LED yellow = Valve open position LED green = Valve close position LED red = AS-i bus error	

Construction

Body	Glass fiber filled PA
Cover (with LED)	
Top cover	PA (transparent)
Side cover	Glass fiber filled PA or stainless steel
Cover (without LED)	Aluminium
Valve adaptor	Brass or stainless steel
Stem and cams	Stainless steel and PEEK
Guiding and bearing	POM
Seals	NBR
Interface gasket	NBR
Cable gland	Polyamid + NBR
IP69K option	Stainless steel + silicon or NBR

Electrical characteristics

Function	ON-OFF and end piloting valve	ON-OFF and end piloting valve
Contact type	**Mechanical contacts**	**Inductive contacts (PNP/NPN)**
Voltage rating	29.5 to 31.6V Via ASi bus cable . Use only AS-Interface power supplies (PELV = Protective Extra Low Voltage)	
Wattage rating max.		
Pilot 302	3.4 W	4.35 W
Pilot 518	1.75 W	2.70 W
Breaking capacity	0.5 A / max. 1 A	100 mA

Electrical connection	M12 Code B per IEC 61076-2-101
ASi communication	Device is supplied from the flat cable bus connection. No additional power cable needed. Bus connection with M12 male connector. Use pin number references. Communication protocol AS-Interface V2.1 extended addressing. Profile per IEC 62026-2: S-7-A-E Extended ID code 1 = 0
IP69K	Cable 6 to 10 mm dia. / 0.24 to 0.39 in

Certifications and Approvals

- RoHS compliance
- Reach compliant

Options

- IP69K according to the standard ISO 20653 with stainless steel cover available for cleaning requirement using hot and high-pressure water jet
- NCS (Non condensing system): Gives a permanent internal air leakage to avoid moisture inside the enclosure

ASCO™ Signaling Box

Product selection guide

PRODUCT CODE

G 890 A T 1 0 2 1 V11 F1

Piloting connection type
G = ISO 228/1
8 = NPT (ANSI B1.20.1)

Product series
890 = Signaling units for air operated valves

Revision letter
A = Initial release

Enclosure type
T = Signaling box

Sensor type - Enclosure type
1 = Mechanical switch - Plastic cover
2 = Mechanical switch - Stainless steel cover
3 = Mechanical switch - Aluminium cover
4 = Inductive switch PNP - Plastic cover
5 = Inductive switch PNP - Stainless steel cover
6 = Inductive switch PNP - Aluminium cover
7 = Inductive switch NPN -Plastic cover
8 = Inductive switch NPN - Stainless steel cover
9 = Inductive switch NPN - Aluminium cover

Pilot type
S = 302 pilot - Standard (orifice size 1.5)
P = 302 pilot - High pressure (orifice size 1.1)
F = 518 spool valve - High flow

Piloting voltage
F1 = 24 VDC (class F)

Options
A00 = Without light position display (Aluminium cover)
V11 = With light position display (LED) [PA and stainless steel covers]
NC1 = Non condensing system with light position display
P69 = IP69K (stainless steel cover)

Valve type

Valves with plastic actuator:
290 NC:
6 = Actuator 50 mm
2 = Actuator 63 mm
3 = Actuator 90 mm
5 = Actuator 125 mm

290 NO:
7 = Actuator 63 mm
8 = Actuator 90 mm
9 = Actuator 125 mm

390 NC:
2 = Actuator 63 mm
3 = Actuator 90 mm
5 = Actuator 125 mm

390 NO:
8 = Actuator 63 mm or 90 mm
9 = Actuator 125 mm

Valves with stainless steel actuator:
290 NC:
1 = Actuator 50 mm or 63 mm
4 = Actuator 90 mm

290 NO:
6 = Actuator 50 mm or 63 mm
7 = Actuator 90 mm

390 NC:
1 = Actuator 50 mm or 63 mm
4 = Actuator 90 mm

390 NO:
6 = Actuator 50 mm or 63 mm
7 = Actuator 90 mm

Electrical connection type
2 = ASi communication protocol

Installation

- The signaling box can be installed in any position
- Adjustable signaling box enables 360° access to cable gland
- Installation/maintenance instructions are included with each signaling box
- Electrical connexion:

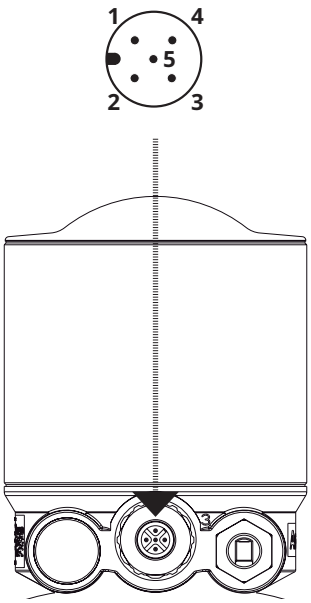

Wiring diagram M12 Male power connector, A-CODED 5 Poles, IEC 61076-2-101	
Pin 1	ASI +
Pin 2	N/A
Pin 3	ASI -
Pin 4	N/A
Pin 5	N/A

AS-i bit setting:

Data bit	Piloting function	Function inductive contacts	Function mechanical contacts
Type	OUTPUT	INPUT	INPUT
D0	Pilot status Bit = 1 = energized Bit = 0 = de-energized	Valve close position Bit = 1 = activated Green light	Valve open position Bit = 1 = activated Yellow light
D1	-	Valve open position Bit = 1 = activated Yellow light	Valve close position Bit = 1 = activated Green light
D2	-		
D3			

ASCO™ Signaling Box

Dimensions mm (inches), **Weight** kg (Lbs)

Configurator - CAD Files

Angle seat valve - Plastic actuator (with PA or stainless steel side cover)

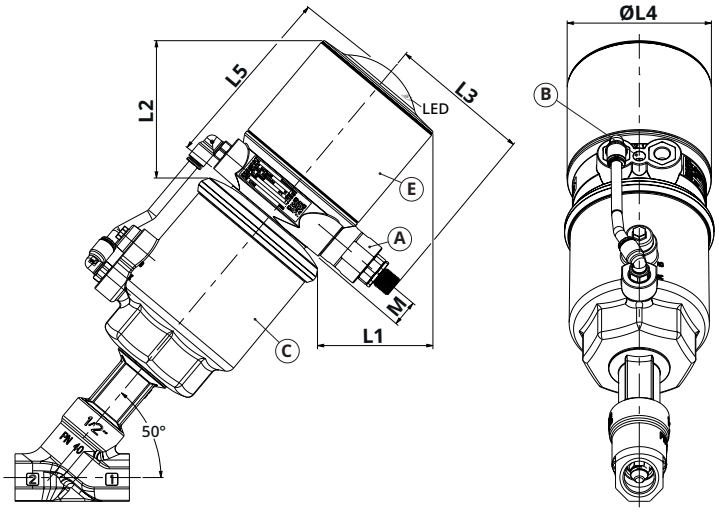

Weight (Signaling box alone)			
PA	Stainless steel	Stainless steel (IP69K)	
0.480	0.680	0.760	kg
1.06	1.5	1.67	(Lbs)

(A) M12 connector (IP66) or IP69K cable gland
(B) Unit rotation lock set screw (orientable through 360°)
(C) For plastic actuators 50 mm (NC), 63 mm to 125 mm (NC/NO)
(E) PA cover
(G) IP69K version (63 mm to 125 mm actuators only)

Actuator diameter		L1	L2	L3		ØL4	L5	M
				IP66	IP69K and NC [1]			
50 mm	mm	69	80	56	84	82	108.5	15.2
	(in)	2.717	3.150	2.205	3.307	3.228	4.272	0.6
63 mm	mm	66	78	56	84	82	108.5	15.2
	(in)	2.598	3.071	2.205	3.307	3.228	4.272	0.6
90 mm	mm	55	70	56	84	82	108.5	15.2
	(in)	2.165	2.756	2.205	3.307	3.228	4.272	0.6
125 mm	mm	41	58.5	56	84	82	108.5	15.2
	(in)	1.614	2.303	2.205	3.307	3.228	4.272	0.6

[1] Stainless steel tube only.

Angle seat valve - Plastic actuator (with aluminium cover)

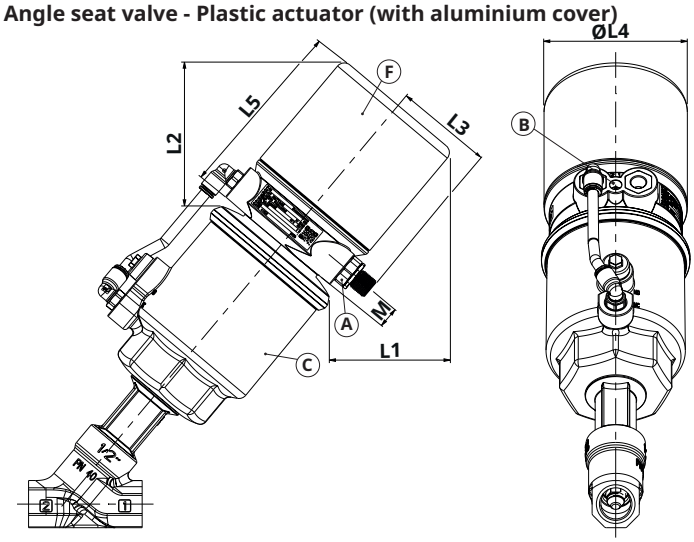

Weight (Signaling box alone)	
Aluminium	
0.540	kg
1.19	(Lbs)

(A) M12 (IP66) connector
(B) Unit rotation lock set screw (orientable through 360°)
(C) For plastic actuators 50 mm (NC), 63 mm to 125 mm (NC/NO)
(F) Aluminium cover

Actuator diameter		L1	L2	L3	ØL4	L5	M
50 mm	mm	72.5	84.5	56	82	105	15.2
	(in)	2.854	3.327	2.205	3.328	4.134	0.6
63 mm	mm	69	82	56	82	105	15.2
	(in)	2.717	3.228	2.205	3.328	4.134	0.6
90 mm	mm	58	74	56	82	105	15.2
	(in)	2.283	2.913	2.205	3.328	4.134	0.6
125 mm	mm	44.5	62.5	56	82	105	15.2
	(in)	1.752	2.461	2.205	3.328	4.134	0.6

Dimensions mm (inches), **Weight** kg (Lbs)

Configurator - CAD Files

Angle seat valve - Stainless steel actuator (with PA or stainless steel cover)

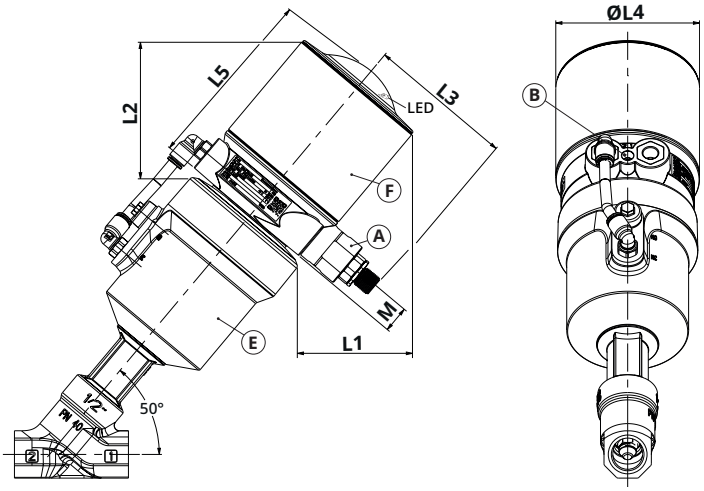

Weight (Signaling box alone)			
PA	Stainless steel	Stainless steel (IP69K)	
0.480	0.680	0.760	kg
1.06	1.5	1.67	(Lbs)

- (A) M12 connector (IP66) or IP69K cable gland
- (B) Unit rotation lock set screw (orientable through 360°)
- (D) For stainless actuators 50 mm to 90 mm (NC/NO)
- (F) Stainless steel cover
- (G) IP69K version (63 mm and 90 mm actuators only)

Actuator diameter		L1	L2	L3		ØL4	L5	M
				IP66	IP69K and NC [1]			
50 mm	mm	70.5	81.5	56	84	55.5	108.5	15.2
	(in)	2.776	3.209	2.205	3.307	2.185	4.272	0.6
63 mm	mm	66	78.5	56	84	55.5	108.5	15.2
	(in)	2.598	3.091	2.205	3.307	2.185	4.272	0.6
90 mm	mm	56.5	70.5	56	84	55.5	108.5	15.2
	(in)	2.224	2.776	2.205	3.307	2.185	4.272	0.6

[1] Stainless steel tube only.

Angle seat valve - Stainless steel actuator (with aluminium cover)

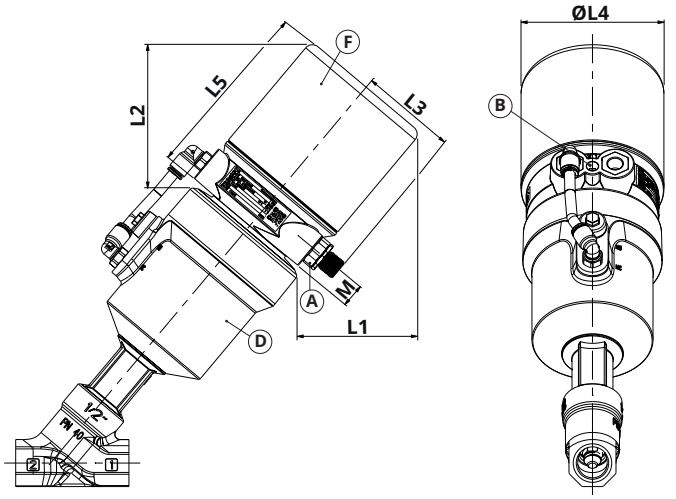

Weight (Signaling box alone)	
Aluminium	
0.540	kg
1.19	(Lbs)

- (A) M12 (IP66) connector
- (B) Unit rotation lock set screw (orientable through 360°)
- (D) For stainless actuators 50 mm to 90 mm (NC/NO)
- (F) Aluminium cover

Actuator diameter		L1	L2	L3	ØL4	L5	M
50 mm	mm	73.5	85.5	56	82	105	15.2
	(in)	2.894	3.366	2.205	3.328	4.134	0.6
63 mm	mm	69.5	82.5	56	82	105	15.2
	(in)	2.736	3.248	2.205	3.328	4.134	0.6
90 mm	mm	60	75	56	82	105	15.2
	(in)	2.362	2.953	2.205	3.328	4.134	0.6

ASCO™ Compact Signaling Unit

With reed switch or magneto-resistive (MR) "T"-type detectors, for series 290 and 390 valves

Series **890**

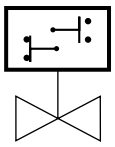

Features and Benefits

- *The signaling unit fits all 290 (2/2) and 390 (3/2) valves with 32 mm/50 mm (NC), 63 to 125 mm (NC/NO) operators and electrically and visually indicates whether the valve is open or closed*
- *Size and shape adapted for easy valve installation*
- *Detectors held in place by lateral grooves*
- *Incorporated detectors for enhanced protection*
- *One standard detector support suitable for both reed switch and magneto-resistive (MR) "T"-type detectors*

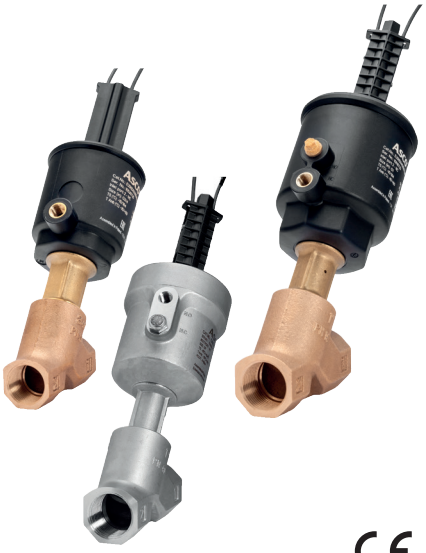

Operation

The magnet support of the compact signaling unit is attached to the stem of the valve and contains the permanent magnet. The extreme positions of the valve stem can therefore be detected by either the reed switch or the magneto-resistive detectors.

It is possible to install one or two detectors to monitor one or both extreme positions of a valve.

General

	Reed switch detector	Magneto-resistive detector
Ambient temperature range	-25°C to +70°C (-4°F to 122°F?)	-25°C to +85°C (176°F to 122°F)
Degree of protection	IP67 (EN 60529)	IP67 / IP69K (EN 60529)
Vibration	Max. 1 g (EN 60068-2-6)	
Protection class	Cable outlet, class III M8 + M12, class III	Class III

Construction

Support	PA
Detector encapsulation	PA + FV
Cable	PUR, resistant to cutting oils (PVC = M12, IP69K)

Electrical characteristics

	Reed switch detector	Magneto-resistive detector
Function	ON/OFF	ON/OFF
Max. breaking power	5 VA (AC) -5 W (DC)	3 W (DC)
Switching voltage		
stripped ends	AC/DC: 5 to 120 V max.	10 to 30 V DC
connector	AC: 5 to 50 V max. DC: 5 to 60 V max.	10 to 30 V DC
Max. switching current	100 mA	100 mA
Short-circuit protection	No	Yes
Reverse polarity protection	Yes (without LED function)	Yes
Overload protection	No	Yes
Wiring -	PNP - NPN	
Voltage drop	< 5 V	< 1.5 V (I = 50 mA) < 2.5 V (I = 100 mA)
Breakdown voltage	230 V DC	-
Contact resistance	max. 0.2 ohm	-
Insulation resistance	2 10^8 ohm at 100 V	-
Max. leakage current	-	< 50 µA
Max. allowable overvoltage	-	32 V DC max. (100 ms)
Sensitivity	Min. 2.1 mTesla (21 Gauss)	Min. 2 mTesla (20 Gauss)
Response time		
opening	0.1 ms	110 µs
closing	0.6 ms	220 µs
Repeatability	< ± 0.2 mm	< 0.2 mm
Approval	CE	CE (UL, cUL 2m + M8)
Signal indication	Yellow diode (LED) which lights up when contact is established	

Product selection guide

Compact signaling unit supplied mounted on valve with installed and adjusted position detectors.

PRODUCT CODE

P 890 A S 1 0 0 1 A00 00

Product series
890 = Signaling units for air operated valves

Revision letter
A = Initial release

Enclosure type
S = Compact signaling unit

Sensor type
0 = No sensor
1 = REED switch
2 = Magneto-resistive switch PNP
3 = Magneto-resistive switch NPN

Sensor specifications (2 sensors included)
0 = No sensor
1 = M12 connector - IP67 - 0.3 meter/12 in - (Compatible Reed switch detector / MR detector-PNP)
2 = M12 connector - IP69K - 0.3 meter/12 in - (Compatible MR detector-PNP)
3 = M8 connector - IP67 - 0.3 meter/12 in (1-4) - (Compatible reed switch detector)
4 = M8 connector - IP67 - 0.3 meter/12 in (1-3) - (Compatible reed switch detector)
5 = M8 connector - IP67 - 0.3 meter/12 in (1-3-4) - (Compatible MR detector)
6 = Flying Leads - IP 67 - 2 wires - 2 m/79 in - (Compatible reed switch detector)
7 = Flying Leads - IP 67 - 2 wires - 5 m/197 in - (Compatible reed switch detector)
8 = Flying Leads - IP 67 - 3 wires - 2 m/79 in - (Compatible MR detector)
9 = Flying Leads - IP 67 - 3 wires - 5 m/197 in - (Compatible MR detector-PNP)

Piloting voltage
00 = No sensor
X1 = 5 to 120 V AC/DC
X2 = 5 to 50 V AC / 5 to 60 V DC
X3 = 10 to 30 V DC

Valve type
1 = Plastic actuator 32 mm
2 = Stainless steel actuator 32 mm
3 = Plastic and stainless steel actuators 50 mm
4 = Plastic and stainless steel actuators 63 mm and Plastic and stainless steel actuators 90 mm
5 = Plastic actuators 90 mm and 125 mm

Position detector selection

For separate order.

description			IP	lead			Catalog number (2)		
							reed switch detector	MR detector	
								PNP	NPN
• stripped ends	2 wires	2 m	IP67	PUR			P494A0021300A00	-	-
		5 m					P494A0021100A00	-	-
	3 wires	2 m					-	P494A0022300A00	P494A0022400A00
		5 m			(0,14 mm²)		-	P494A0022100A00	-
• 3-pin plug-in male connector and Ø M8		0,3 m	IP67	PUR		 1 - 4	P494A0021500A00	-	-
						 1 - 3	P494A0021600A00	-	-
							-	P494A0022600A00	P494A0022700A00
• 3-pin screw-type male connector, Ø M12		0,3 m	IP67	PUR			P494A0021700A00	-	-
							-	P494A0022800A00	-
			IP69K	PVC			-	P494A0022900A00	-

(1) Add "PFB" in option of the catalogue number of the selected valve.
Example: catalogue number of valve E290D0250DPFB00 + installed and adjusted compact signaling unit P890AS1104A00X2
(2) Each catalogue number corresponds to one single detector.

ASCO™ Compact Signaling Unit

Installation

- Polarised magneto-resistive (MR) detector with output protected against possible short-circuits on load at an output current lower than or equal to 0.1 A. In case of inductive load, use a diode in parallel with the load
- Installation/maintenance instructions are supplied with each compact signaling unit

Accessories

• PVC extension cord, length 5 m, 3-wire conductors 0.25 mm² with 1 screw-type female M8 connector (other end plain)[1], catalogue number **P4994406200N001**	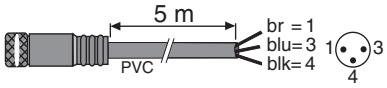
• PVC extension cord, length 5 m, 3-wire conductors 0.25 mm² with 1 screw-type female M12 connector (other end plain)[1], catalogue number **P4994406210N001**	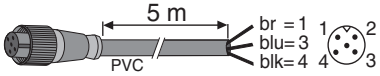
• Straight 3-pin female connector Ø M8, IP67, catalogue number **P4994406220N001**	
• Right angle 3-pin female connector Ø M8, orientable 90° x 90°, IP67, catalogue number **P4994406230N001**	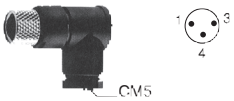
• Block of memorizing position of adjustment detector, catalogue number **P4994406160N001**	

[1] Detector connection:
Magneto-resistive type: brown wire = +, blue wire = -, black wire = load

Dimensions mm (inches), **Weight** kg (Lbs)

Weight of signaling support: 0.25
Weight of one single detector: 0.007 to 0.050 depending on connector configuration and cable length

Plastic actuator 32 mm

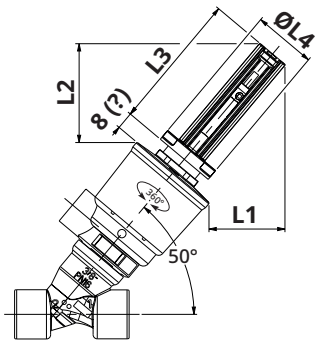

Plastic actuator 50 mm

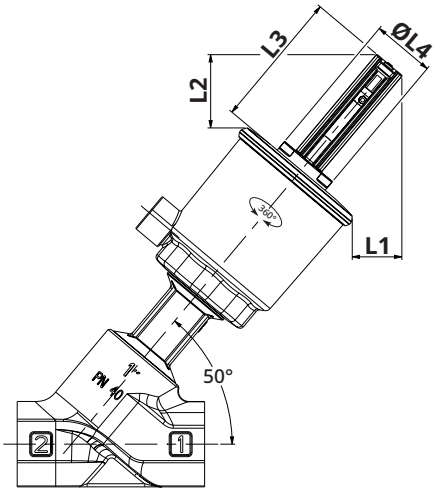

Plastic actuators 63 mm/90 mm/125 mm

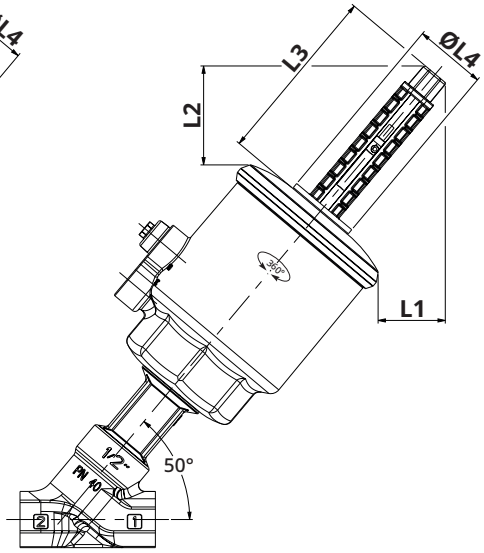

		Compact signaling unit with 290 plastic actuator				
		32 mm (NC)	50 mm (NC)	63 mm	90 mm	125 mm
L1	mm	36.5	24	32.5	21.5	8
	(in)	1.437	0.945	1.280	0.846	0.315
L2	mm	47.5	35.5	47.5	39.5	28
	(in)	1.870	1.398	1.870	1.555	1.102
L3	mm	66	66	86	86	86
	(in)	2.598	2.598	3.386	3.386	3.386
L4	mm	32	32	34.5	34.5	34.5
	(in)	1.260	1.260	1.358	1.358	1.358

Stainless steel actuator 32 mm

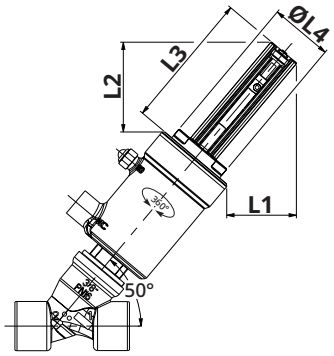

Stainless steel actuator 50 mm

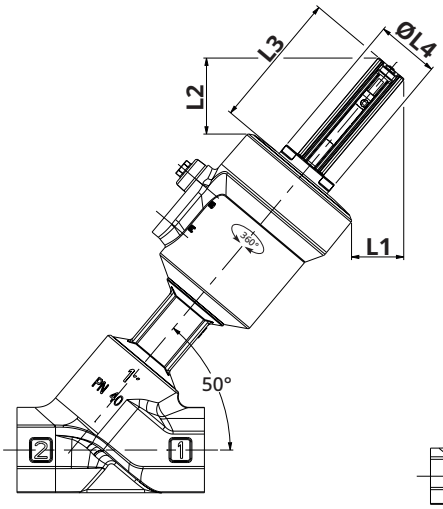

Stainless steel actuators 63 mm and 90 mm

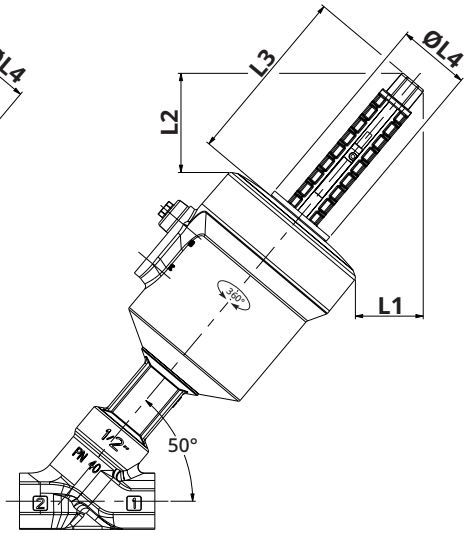

		Compact signaling unit with 290 stainless steel actuator			
		32 mm (NC)	50 mm (NC)	63 mm	90 mm
L1	mm	33.5	25	33	23
	(in)	1.319	0.984	1.299	0.906
L2	mm	43	36.5	48	40
	(in)	1.693	1.437	1.890	1.575
L3	mm	66	66	86	86
	(in)	2.598	2.598	3.386	3.386
L4	mm	32	32	34.5	34.5
	(in)	1.260	1.260	1.358	1.358